CCD-F455E
RMT-502

SERVICE MANUAL

AEP Model
UK Model
E Model

Remote commander is available as a unit, but as individual parts the battery case lid of commander is only available.

This photo is AEP/UK model.

Handycam
Video 8

For MECHANICAL ADJUSTMENTS, refer to the "8mm Video MECHANICAL ADJUSTMENT MANUAL Ⅲ (U MECHANISM)" (9-972-732-11)

SPECIFICATIONS

System

Video recording system	Rotary two heads, Helical scanning FM system
Audio recording system	Rotary head, FM system
Video signal	PAL colour, CCIR standards
Usable cassette	8 mm video format cassette
Tape speed	SP mode: Approx. 20.051 mm/sec. LP mode: Approx. 10.058 mm/sec.
Recording/Playback time	SP mode: 1 hour 30 min. (P5-90) LP mode: 3 hours (P5-90)
Fast-forward/rewind time	Approx. 6 min. 30 sec. (P5-90)
Image device	CCD (Charge Coupled Device)
Viewfinder	Electronic viewfinder (black and white)
Lens	Combined 8 × power zoom lens f=8.5 to 68 mm. F 1.6 with macro Filter diameter: 46 mm
Auto focus system	TTL
Colour temperature	AUTO, HOLD INDOOR 3,200 K OUTDOOR 5,800 K
Minimum illumination	3 lux (F 2.0)
Illumination range	3 lux to 100,000 lux (0.3 to 9,294 footcandles)
Recommended illumination	More than 100 lux (9 footcandles)
Aperture correction	Automatic With backlight adjustment

Input and output connector

Video input*/output	Phono jack, 1 Vp-p, 75 ohms unbalanced, sync negative
Audio input*/output	Phono jack Input: −7.5 dBs, input impedance more than 47 kilohms Output: −7.5 dBs, (at output impedance less than 1 kilohms)

input*: E model only.

RFU DC OUT	Special minijack (1), 5 V DC
Earphone jack	Minijack (1), 8-ohm impedance
Remote jack	Stereo mini-minijack (1)
MIC jack	Minijack (1), −66 dBs, low impedance with 2.5 to 3 V DC output, impedance 6.8 kilohms
Microphone power output jack	special minijack (1), 5 V DC

continued on next page

8 VIDEO CAMERA RECORDER

SONY®

MICROFILM

General

Power requirements	On battery mounting surface 6.0 V (battery pack) 7.5 V (AC power adaptor) 9.0 V (alkaline batteries)
Power consumption	6.5 W (camera recording) including the viewfinder
Installation	Vertically, horizontally
Operating temperature	0°C to 40°C
Storage temperature	–20°C to +60°C
Dimensions	Approx. 111 x 139 x 330 mm (w/h/d)
Weight	Approx. 1.2 kg excluding the battery and cassette
Microphone	Electret condenser microphone, uni-directional monaural type

Wireless Remote Commander

Remote control system	Infrared control
Command mode	VTR2
Power requirements	3 V DC, 2 R6 (size AA) batteries
Dimensions	Approx. 57 x 20 x 120 mm (w/h/d)
Weight	Approx. 62 g

Design and specifications are subject to change without notice.

Note
This appliance conforms with EEC Directive 87/308/EEC regarding interference suppression.

Supplied Accessories

The camcorder is packed together with the following units. Check to see that everything is contained in the package. (* Attached to the camcorder)

- Remote Commander (1)
- R6 (size AA) battery for Remote Commander (2)
- Battery pack NP-66 (1)
- AC power adaptor AC-V60A (1)
- Lithium battery CR2025 (1)
- RFU adaptor RFU-90E or RFU-89EA (1) With the RFU-89EA, an aerial selector and a screwdriver are supplied.
- Cassette tape (1)
- Shoulder strap (1)
- Lens cap (1)*

SAFETY CHECK-OUT

After correcting the original service problem, perform the following safety checks before releasing the set to the customer:

1. Check the area of your repair for unsoldered or poorly-soldered connections. Check the entire board surface for solder splashes and bridges.
2. Check the interboard wiring to ensure that no wires are "pinched" or contact high-wattage resistors.
3. Look for unauthorized replacement parts, particularly transistors, that were installed during a previous repair. Point them out to the customer and recommend their replacement.
4. Look for parts which, though functioning, show obvious signs of deterioration. Point them out to the customer and recommend their replacement.
5. Check the B+ voltage to see it is at the values specified.

SAFETY-RELATED COMPONENT WARNING!!

COMPONENTS IDENTIFIED BY MARK ⚠ OR DOTTED LINE WITH MARK ⚠ ON THE SCHEMATIC DIAGRAMS AND IN THE PARTS LIST ARE CRITICAL TO SAFE OPERATION. REPLACE THESE COMPONENTS WITH SONY PARTS WHOSE PART NUMBERS APPEAR AS SHOWN IN THIS MANUAL OR IN SUPPLEMENTS PUBLISHED BY SONY.

TABLE OF CONTENTS

Section	Title	Page
1.	**GENERAL**	
	• Identifying the Parts	6
	• Connecting the Power Sources	9
	• Using the Best of the Battery Pack	11
	• Setting the Data and Time	13
	• Inserting a Tape	14
	• Adjusting the Viewfinder Lens	14
	• Recording a Picture Using Automatic Adjustment	15
	• Selecting the Automatic/Manual Adjustment	18
	• Manual Focusing	19
	• Adjusting the White Balance	20
	• Setting Shoutter Speed	21
	• Shooting with Backlighting	21
	• Using the PROGRAM AE Button	22
	• Zooming	23
	• Close-up (Autofocusing in Macro)	23
	• Fade-in and Fade-out	24
	• Superimposing a Title	25
	• Recording the Age of Your Child	28
	• Connections for Playback	30
	• Playing Back a Tape	31
	• Using the Tape Counter	33
	• Editing onto Another VTR	33
	• Hints for Better Shooting	34
	• Notes and Precautions	35
	• Using your Camcorder Abroad	36
	• Indications Inside the Viewfinder and the Display Window	36
2.	**DISASSEMBLY**	
2-1.	Removal of Cassette Lid Assy	37
2-2.	Removal of VTR Panel (L) Assy	37
2-3.	Removal of Lens Hoop	37
2-4.	Removal of Cabinet (L) Assy	37
2-5.	Removal of Cabinet (R) Assy	38
2-6.	Removal of Microphone(MC-76 Board)	38
2-7.	Removal of EVF Assy	38
2-8.	Removal of Camera Block	39
2-9.	Removal of CCD Imager(CD-65 Board)	39
2-10.	Removal of VA-67 Board	40
2-11.	Removal of SS-136 Board	40
2-12.	Removal of Cassette Compartment Assembly	40
2-13.	Internal Views	41
3.	**DIAGRAMS**	
3-1.	Circuit Boards Location	43
3-2.	Overall Block Diagram	44
3-3.	Camera (1) Block Diagram	47
3-4.	Camera System Control VC-99 Board IC501 (MC68HC11E9)	51
3-5.	Camera (2) Block Diagram	53
3-6.	Digital Titler Block Diagram	58
3-7.	Video (1) Block Diagram	61
3-8.	Video (2) Block Diagram	67
3-9.	Servo Block Diagram	69
3-10.	System Control Block Diagram	73
3-11.	Servo, System Control System Terminal Function SS-136 Board IC501 (CXP80116)	77
3-12.	Mode Control System IC Terminal Function Description FU-100 Board IC501 (μPD75316)	80
3-13.	Audio Block Diagram	82
3-14.	Viewfinder Block Diagram	85
3-15.	Power Block Diagram	86
4.	**PRINTED WIRING BOARDS AND SCHEMATIC DIAGRAMS**	
4-1.	Frame Schematic Diagram	89
4-2.	Printed Wiring Boards and Schematic Diagrams	92
	• Precaution for replacement of CCD imager block	93
	• CD-65 and VC-99 Boards	94
	• AF-86 Board	104
	• CT-38 Board	109
	• VA-67 Board	114
	• CC-61, SS-136, FP-89 and FP-90 Boards	124
	• CK-50, DK-15, ED-32, LI-39, RM-50, VK-14 and ZK-14 Boards	134
	• FU-100 Board	139
	• MC-76 and SW-183 Boards	143
	• VF-26 and VF-27 Boards	147
4-3.	Semiconductors	149
5.	**EXPLODED VIEWS**	
5-1.	Cabinet (R) and VTR Panel (L) Assemblies	151
5-2.	Cabinet (L) Assembly	152
5-3.	EVF Assembly	153
5-4.	Mechanical Deck Assembly (1)	154
5-5.	Mechanical Deck Assembly (2)	155
5-6.	Mechanical Deck Assembly (3)	156
5-7.	Main Boards Assemblies	157
5-8.	Camera Block Assembly	158
5-9.	Zoom Lens Assembly (1)	159
5-10.	Zoom Lens Assembly (2)	160

Section	Title	Page
6.	**ELECTRICAL PARTS LIST**	161
	HARDWARE LIST	189
7.	**SERVICE MODE**	
7-1.	SENSER LANC	190
7-1-1.	How to Use RM-95 jig	190
7-1-2.	Transfer Method of the Service Mode with RM-95	191
7-1-3.	SENSER LANC Memory Map	192
7-1-4.	Types of Self-diagnostic Feature	193
7-1-5.	How to Use Practically	194
8.	**MECHANICAL ADJUSTMENTS**	
8-1.	Setting the Track Shift Mode	195
8-2.	Preparation for Adjustment	195
9.	**CAMERA ADJUSTMENTS**	
9-1.	List of Servicing Jigs	196
9-2.	Preparation for Adjustment	198
9-2-1.	Preparation	198
9-2-2.	Caution	199
9-2-3.	Adjustment Remote Control	200
9-2-4.	Checkpoint Array	210
9-2-5.	AF Microcomputer Data Reader Jig	211
9-2-6.	Data Processing	211
9-3.	Adjustment of Camera System	212
9-3-1.	Prime Oscillation Adjustment	212
9-3-2.	PLL Adjustment	212
9-3-3.	Flange Back Adjustment	212
9-3-4.	Camera DC-DC Converter Voltage Check	213
9-3-5.	EVR Initial Setting of Adjustment Page F	213
9-3-6.	PG CONT/V SUB Adjustment	215
9-3-7.	HALL Adjustment	216
9-3-8.	IRIS Adjustment	216
9-3-9.	Shutter IN/OUT Adjustment	217
9-3-10.	AGC Adjustment	217
9-3-11.	Matrix Adjustment	218
9-3-12.	Y_H Level Adjustment	219
9-3-13.	Chroma Level Adjustment	220
9-3-14.	Sync Level Adjustment	220
9-3-15.	Setup Adjustment	221
9-3-16.	White Clip Adjustment	221
9-3-17.	Y Level Adjustment	222
9-3-18.	H Aperture Adjustment	222
9-3-19.	Max Gain Adjustment	223
9-3-20.	Burst Level Adjustment	223
9-3-21.	Standard AE Level Adjustmeunt	224
9-3-22(A).	Pre-white Balance Adjustment (with Vectorscope)	224
9-3-22(B).	Pre-white Balance Adjustment (with Oscilloscope)	225
9-3-23.	Color Reproducibility Adjustment	225
9-3-24.	Auto White Balance Adjustment	226
9-3-25.	Outdoor White Balance Check	231
9-3-26.	Focus Motor Speed Adjustment	231
9-3-27.	AF Adjustment	232
9-4.	Digital Titler System Adjustment	233
9-4-1.	Chroma Phase/Gain Adjustment	233
10.	**ELECTRICAL ADJUSTMENTS**	
10-1.	Preparation for Adjustment	234
10-1-1.	Equipment Required	234
10-1-2.	Precaution for Adjustment	234
10-1-3.	Equipment Connection	234
10-1-4.	Setting up for Adjustment	234
10-1-5.	Alignment tape	235
10-1-6.	Input/Output Level and Impedance	235
10-1-7.	Service Mode	236
10-1-8.	To Set the AEP, UK Model to REC Model	241
10-2.	Power Voltage Check	241
10-3.	System Control System Adjustment	242
10-3-1.	Battery Down Adjustment	242
10-3-2.	Clock Accuracy Adjustment	242
10-4.	Servo System Adjustment	243
10-4-1.	Switching Position Adjustment	243
10-4-2.	Oscillation Frequency Adjustment	243
10-4-3.	Output Voltage Adjustment	243
10-5.	Video Adjustment	244
10-5-1.	Playback Frequency Characteristic Adjustment	244
10-5-2.	X'tal Oscillator fo Check	245
10-5-3.	REC E-E Level Adjustment	245
10-5-4.	IR Adjustment	245
10-5-5.	Chroma Comb Filter Adjustment	246
10-5-6.	Emphasis Y Level Adjustment	246
10-5-7.	Y FM Carrier Frequency Adjustment	246
10-5-8.	Y FM Deviation Adjustment	247
10-5-9.	REC Y FM Level Adjustment	247
10-5-10.	Chroma Emphasis Adjustment	247
10-5-11.	HUE Phase Deviation Adjustment	248
10-5-12.	REC Chroma Level Adjustment	248
10-5-13.	PB CCD Input Level Adjustment	248
10-5-14.	PB Level Adjustment	249
10-5-15.	4FSC Frequency Adjustment	249
10-5-16.	Controller Frequency Adjustment	249
10-5-17.	Tracking TH Adjustment	250
10-5-18.	Character Generator SG Frequency Adjustment	250
10-5-19.	DDS Character Position Adjustment	250
10-6.	Audio System Adjustment	251
10-6-1.	AFM Carrier Frequency Check	251
10-6-2.	REC AFM Carrier Level Check	251

Section	Title	Page

10-6-3. IR Adjustment 251
10-6-4. Deviation Adjustment 252
10-6-5. E-E Output Level Check 252
10-6-6. Overall Level Check 252
10-6-7. Overall Frequency Characteristics Check 252
10-6-8. Overall Distortion Check 252
10-6-9. Overall Noise Level Check 253
10-7. Electronic Viewfinder System Adjustment
(A TYPE) 253
10-7-1. Horizontal Tilt Adjustment 253
10-7-2. Centering Adjustment 254
10-7-3. Focus Adjustment 254
10-7-4. Aberration Adjustment 254
10-7-5. Horizontal Oscillation Frequency
Adjustment 254
10-7-6. Horizontal Amplitude Adjustment 255
10-7-7. Vertical Amplitude Adjustment 255
10-7-8. Brightness, Contrast Adjustments 255
10-7-9. Horizontal Amplitude, Vertical Amplitude
and Focus Checks 255
10-8. Electronic Viewfinder System Adjustment
(B TYPE) 256
10-8-1. Horizontal Tilt Adjustment 256
10-8-2. Centering Adjustment 256
10-8-3. AFC Adjustment 257
10-8-4. Horizontal Amplitude Adjustment 257
10-8-5. Vertical Amplitude Adjustment 258
10-8-6. Focus Adjustment 258
10-8-7. Brightness, Contrast Adjustments 258
10-9. Adjusting Part Location Diagram 260

The color reproduction standard frame is contained after the camera adjustments.

SECTION 2
DISASSEMBLY

2-1. REMOVAL OF CASSETTE LID ASSY

Note : When mounting, fit the click ❸ into holes completely, then clamp two screws ❶.

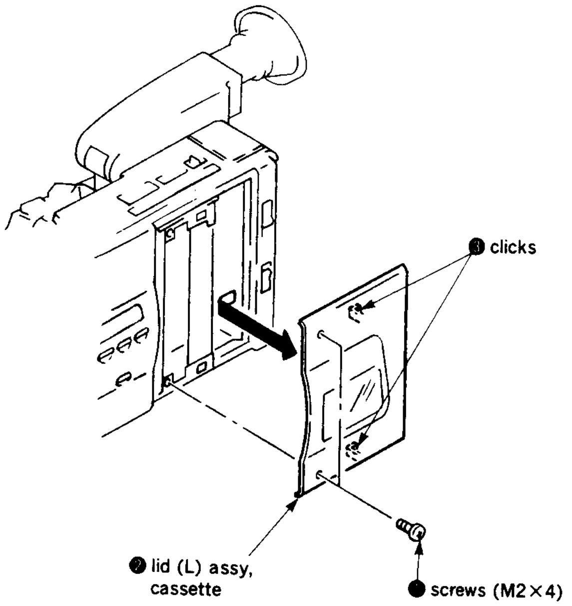

2-3. REMOVAL OF LENS HOOP

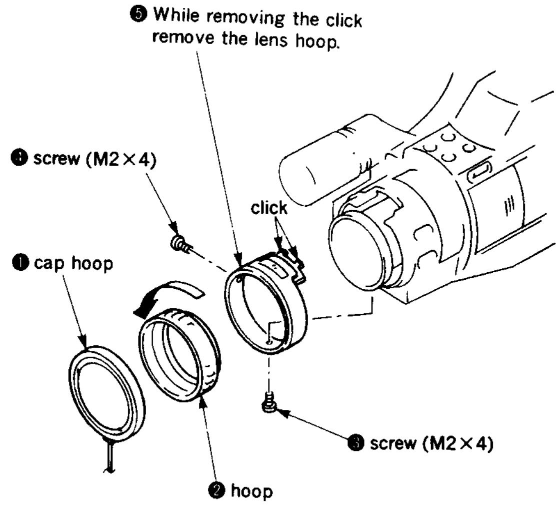

2-2. REMOVAL OF VTR PANEL (L) ASSY

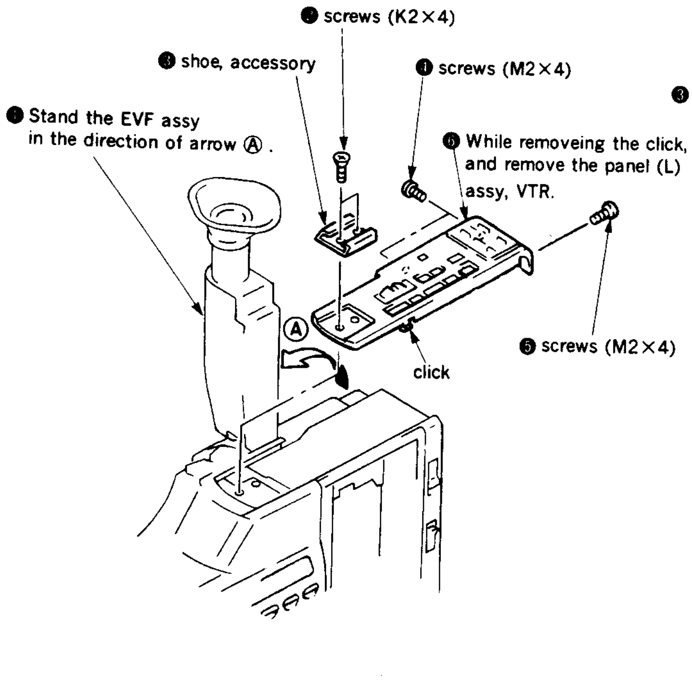

2-4. REMOVAL OF CABINET (L) ASSY

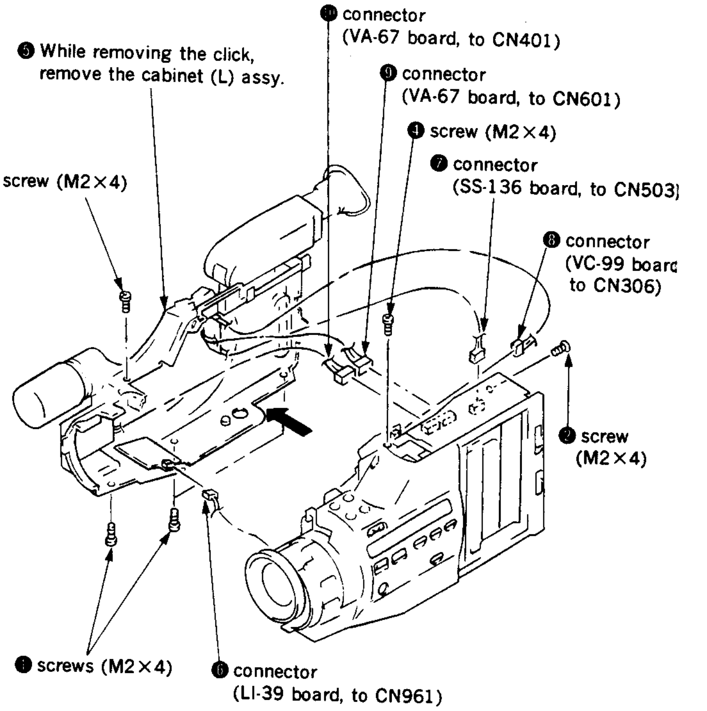

2-5. REMOVAL OF CABINET (R) ASSY

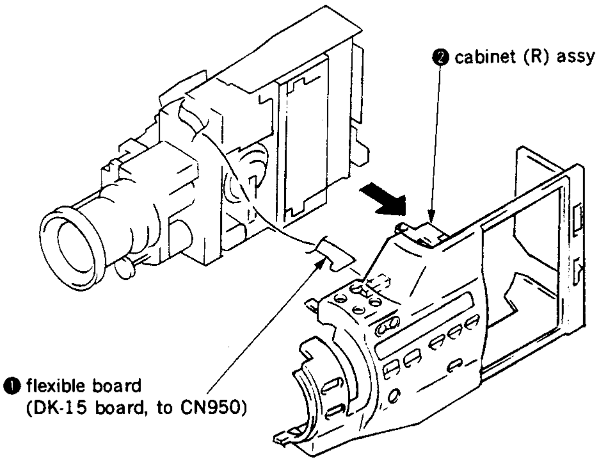

2-6. REMOVAL OF MICROPHONE (MC-76 BOARD)

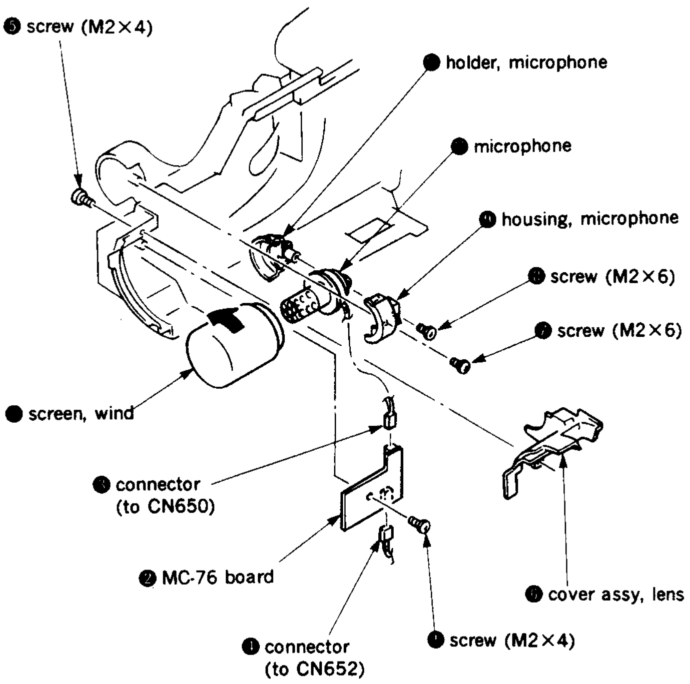

2-7. REMOVAL OF EVF ASSY

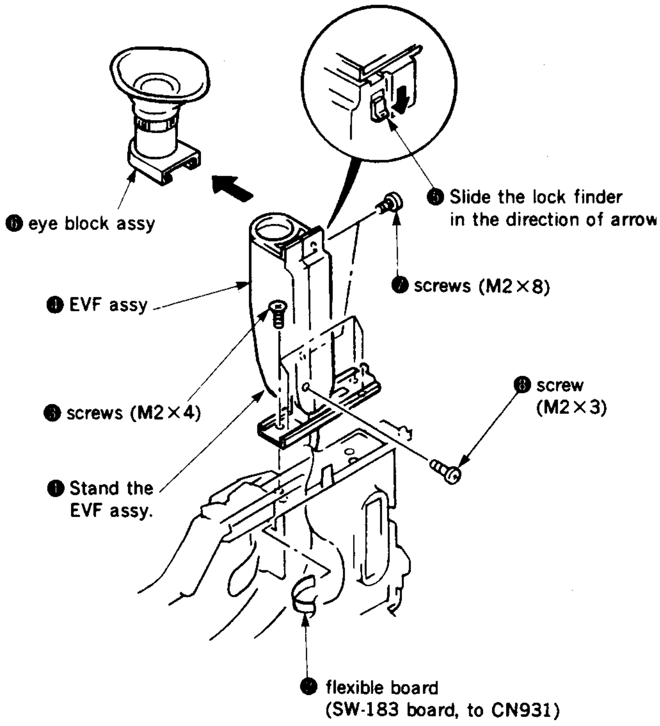

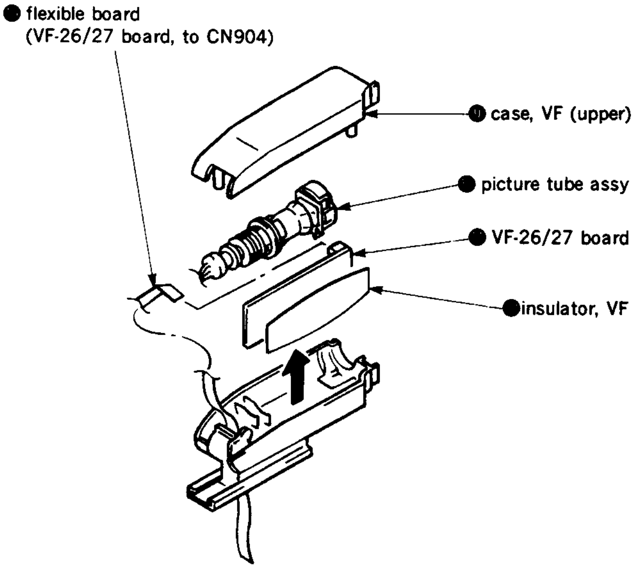

2-8. REMOVAL OF CAMERA BLOCK

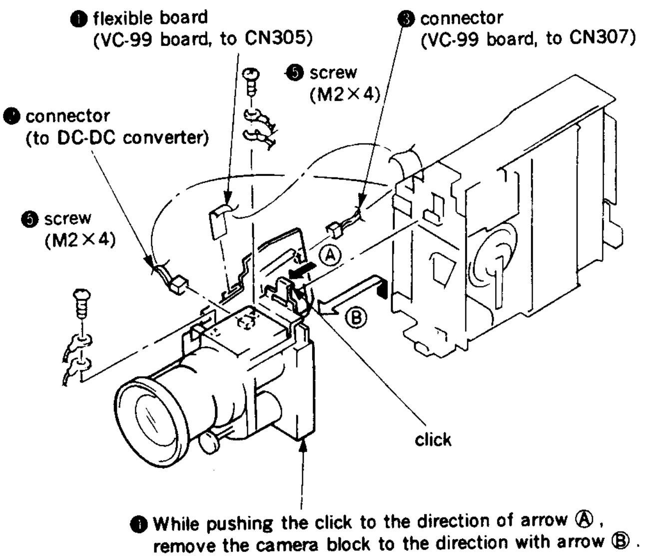

2-9. REMOVAL OF CCD IMAGER (CD-65 BOARD)

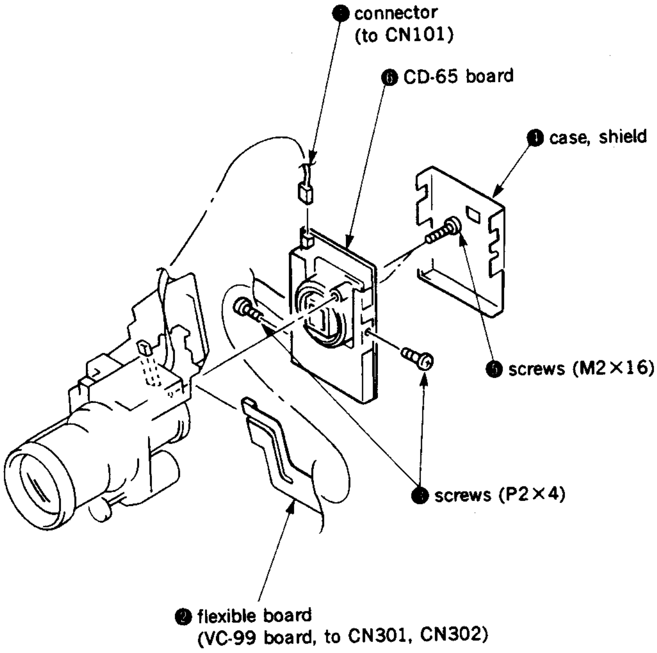

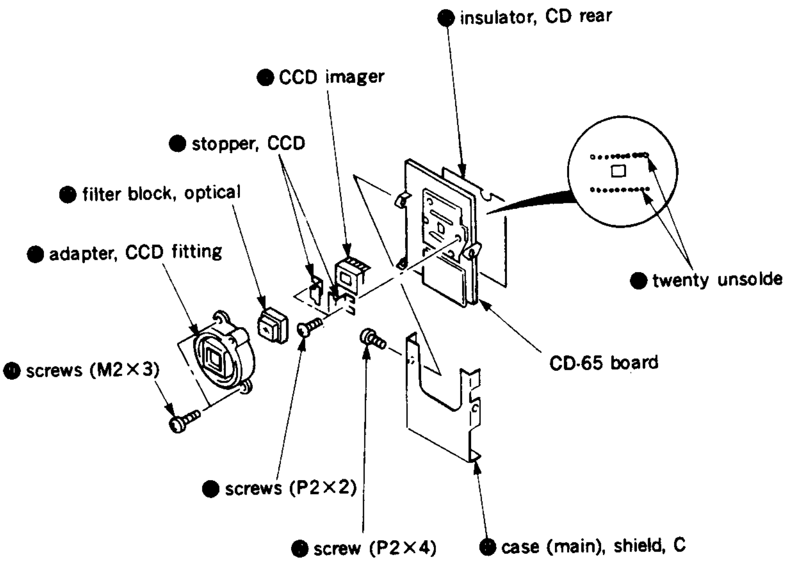

2-10. REMOVAL OF VA-67 BOARD

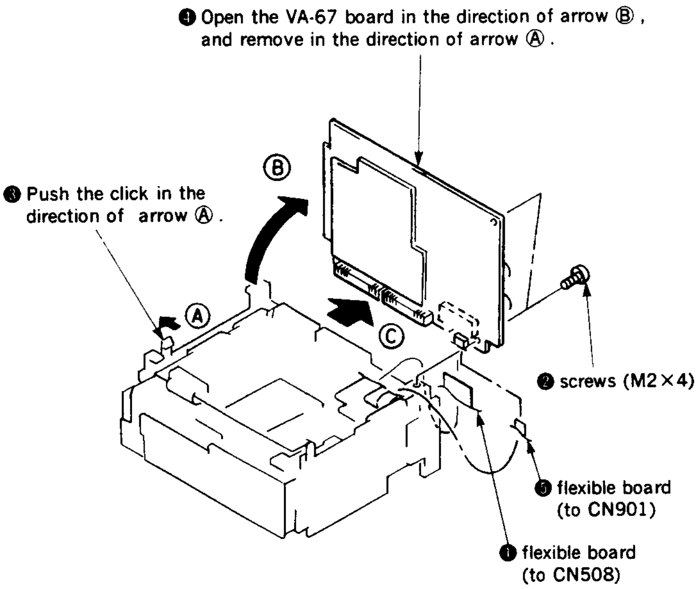

2-11. REMOVAL OF SS-136 BOARD

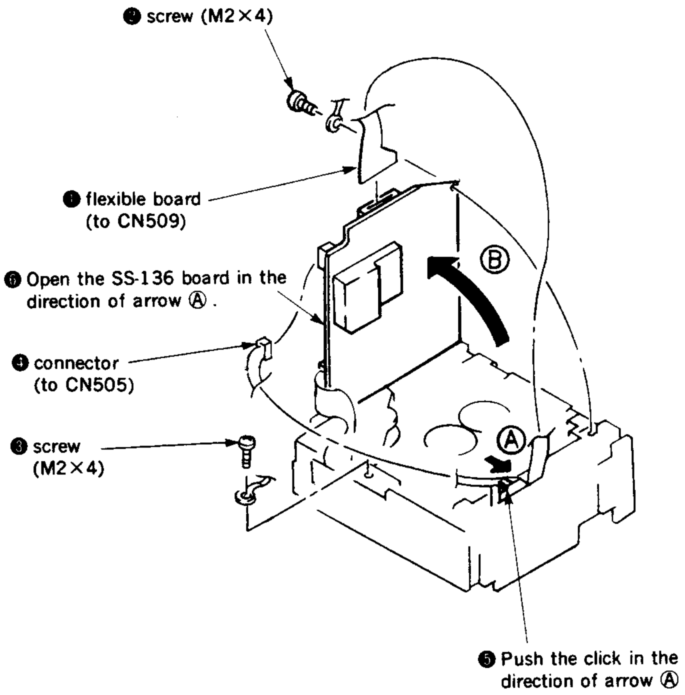

2-12. REMOVAL OF CASSETTE COMPARTMENT ASSEMBLY

Note : When mounting, fit the clicks ❻ into completely, then clamp two screws ❹.

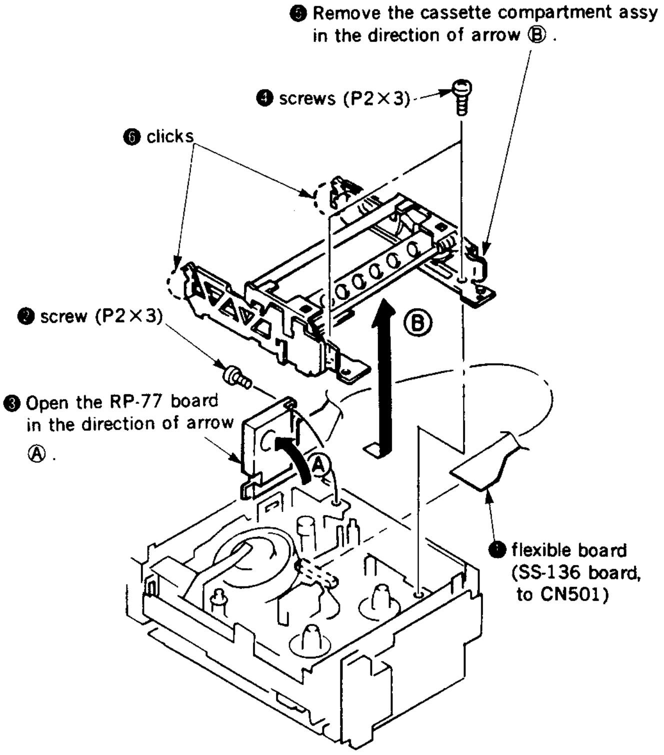

2-13. INTERNAL VIEWS

— Upper —

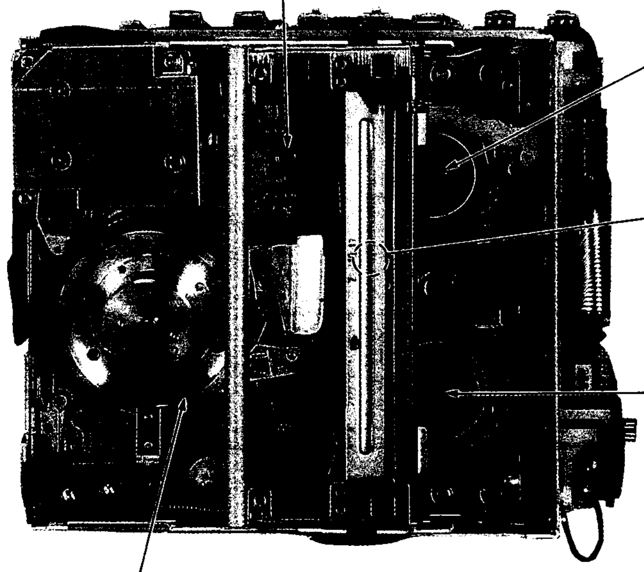

Drum ASSY (DGU-64A-R)	A-7048-405-A
Drum upper (DGR-64-R)	A-7049-343-A

— Lower —

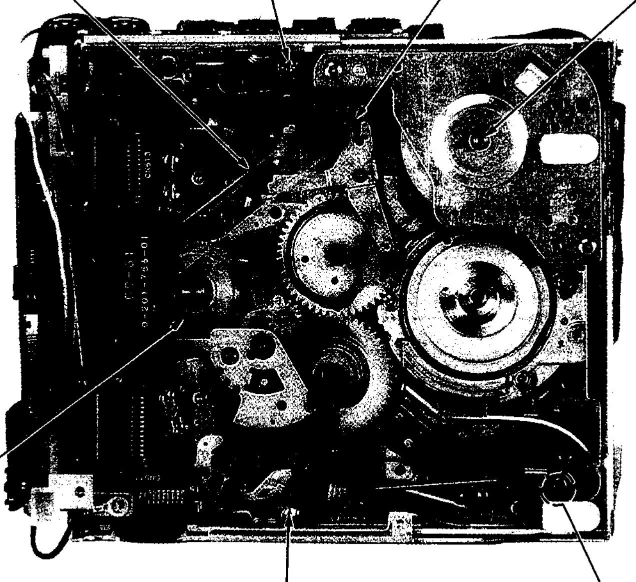

SECTION 3
DIAGRAMS

3-1. CIRCUIT BOARDS LOCATION

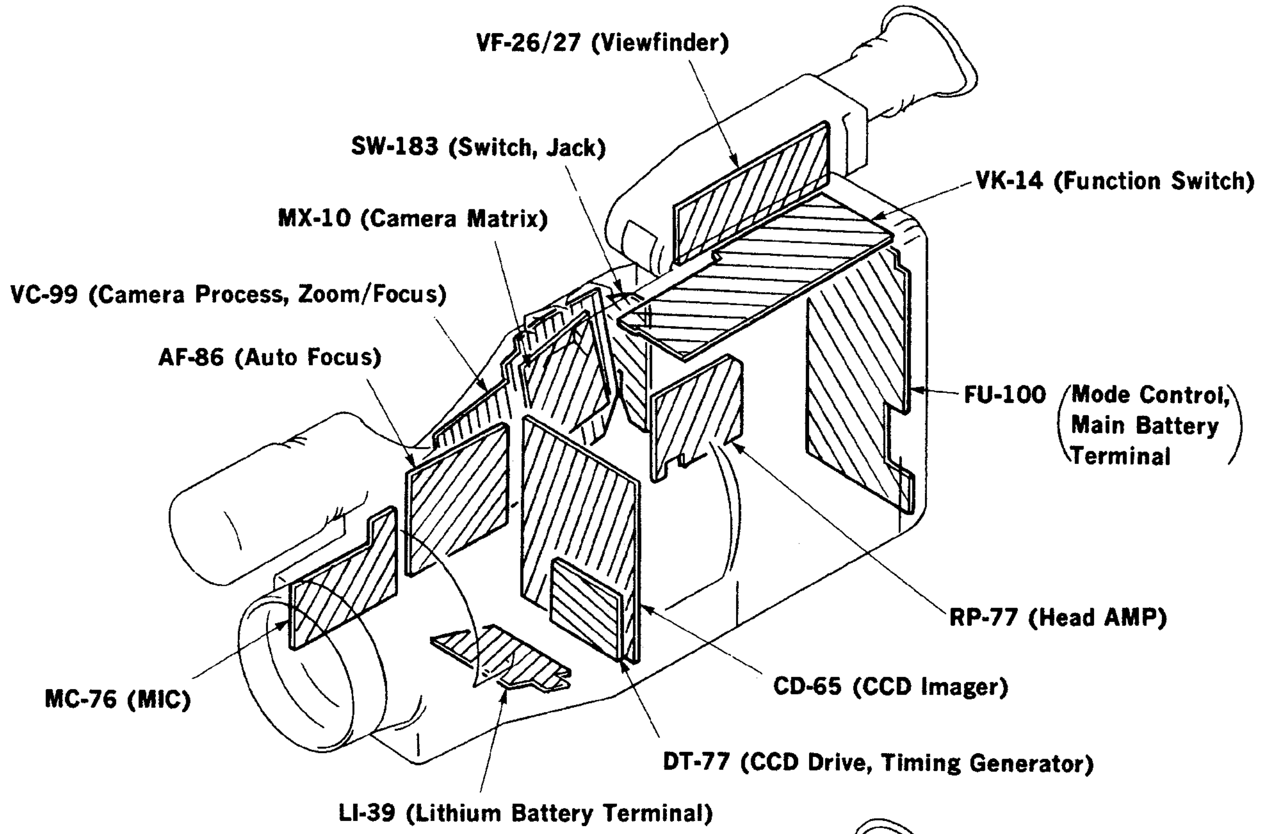

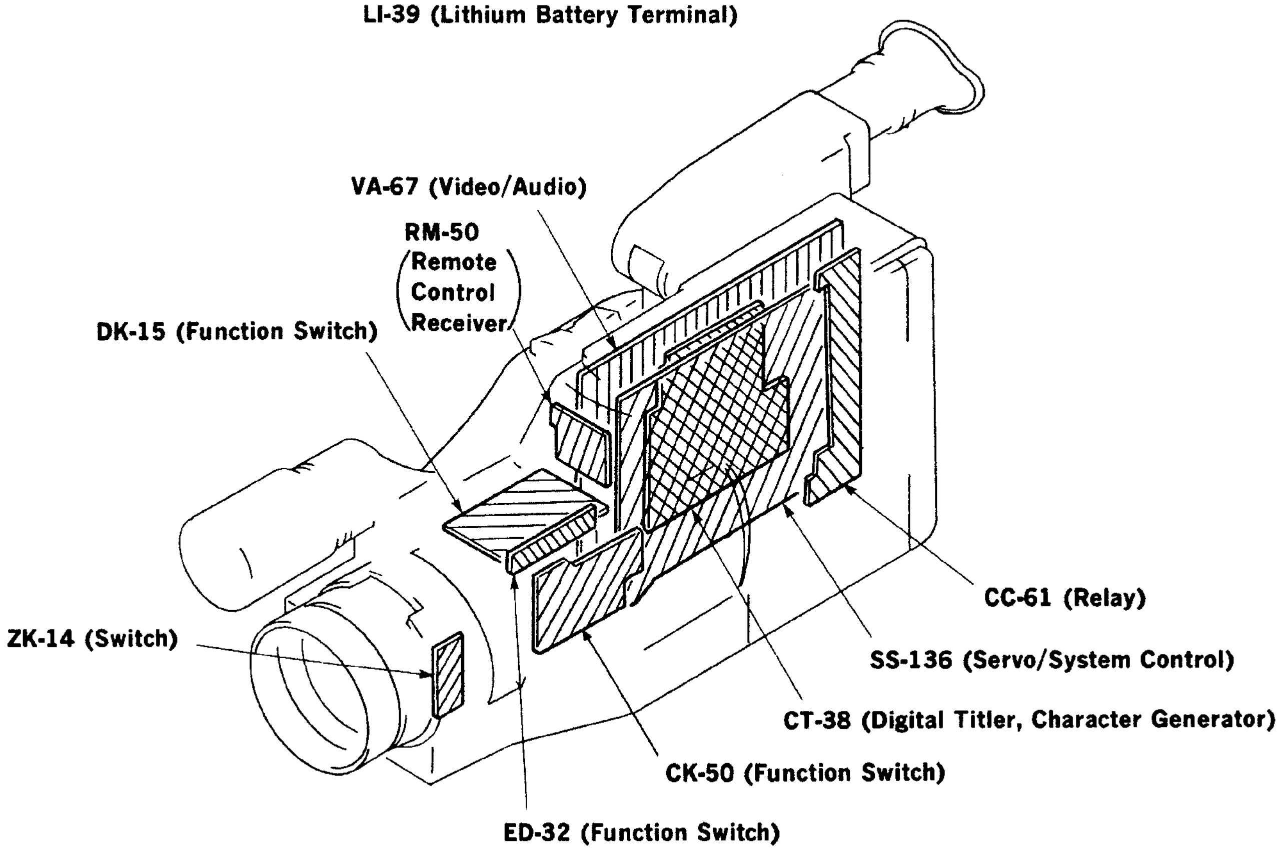

3-2. OVERALL BLOCK DIAGRAM

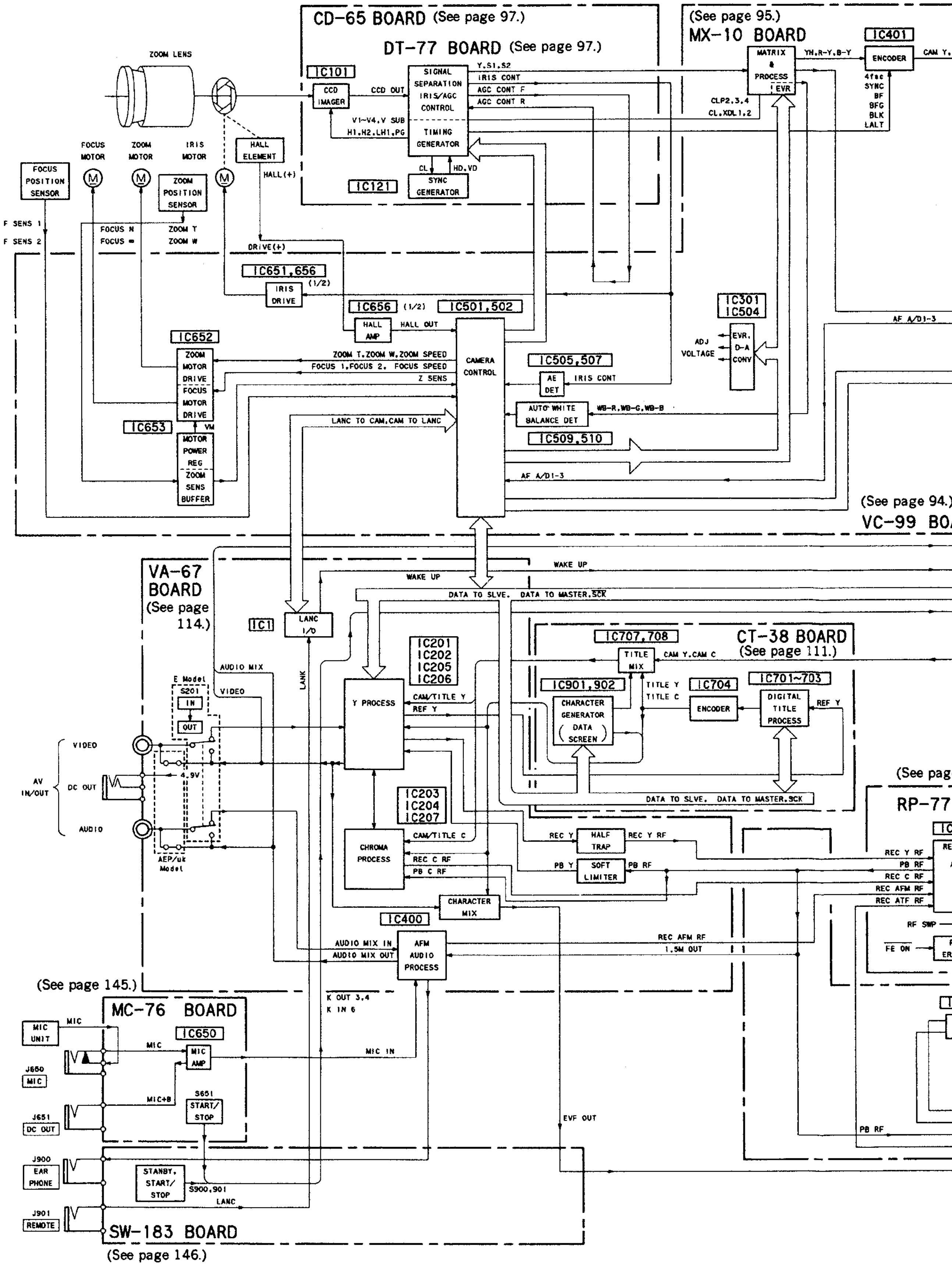

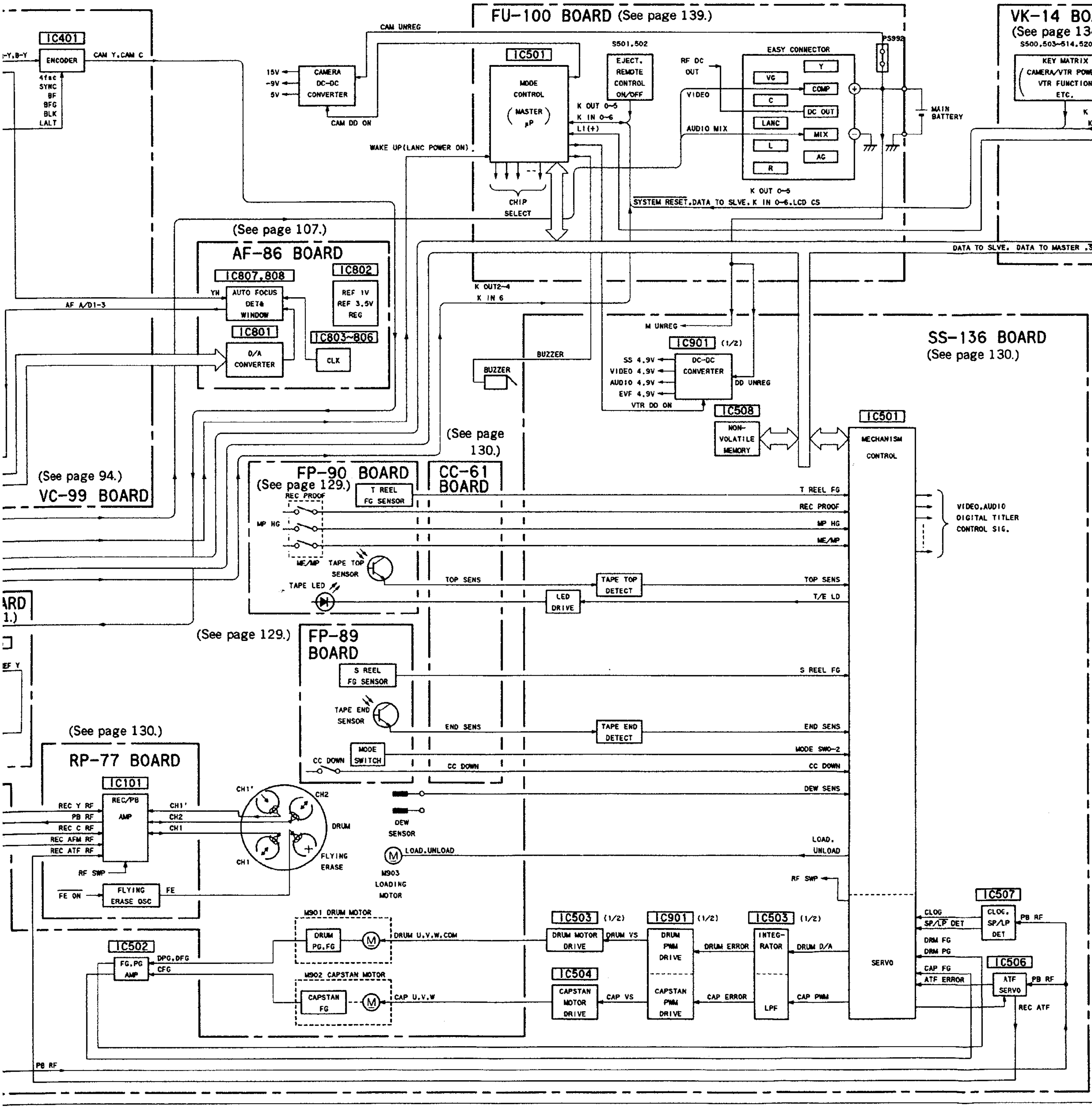
FU-100 BOARD (See page 139.)
VK-14 BOARD (See page 13
AF-86 BOARD (See page 107.)
VC-99 BOARD (See page 94.)
SS-136 BOARD (See page 130.)
FP-90 BOARD (See page 129.)
CC-61 BOARD (See page 130.)
FP-89 BOARD (See page 129.)
RP-77 BOARD (See page 130.)
IC401 ENCODER
IC501 MODE CONTROL (MASTER μP)
EASY CONNECTOR
CAMERA DC-DC CONVERTER
IC807,808 AUTO FOCUS DET& WINDOW
IC802 REF 1V REF 3.5V REG
IC801 D/A CONVERTER
IC803~806 CLK
IC901 (1/2) DC-DC CONVERTER
IC508 NON-VOLATILE MEMORY
IC501 MECHANISM CONTROL
SERVO
IC101 REC/PB AMP
FLYING ERASE OSC
IC502 FG,PG AMP
M901 DRUM MOTOR
M902 CAPSTAN MOTOR
M903 LOADING MOTOR
IC503 (1/2) DRUM MOTOR DRIVE
IC504 CAPSTAN MOTOR DRIVE
IC901 (1/2) DRUM PWM DRIVE
CAPSTAN PWM DRIVE
IC503 (1/2) INTEG-RATOR
LPF
IC507 CLOG, SP/LP DET
IC506 ATF SERVO
TAPE TOP DETECT
TAPE END DETECT
LED DRIVE
BUZZER
MAIN BATTERY
VIDEO,AUDIO DIGITAL TITLER CONTROL SIG.

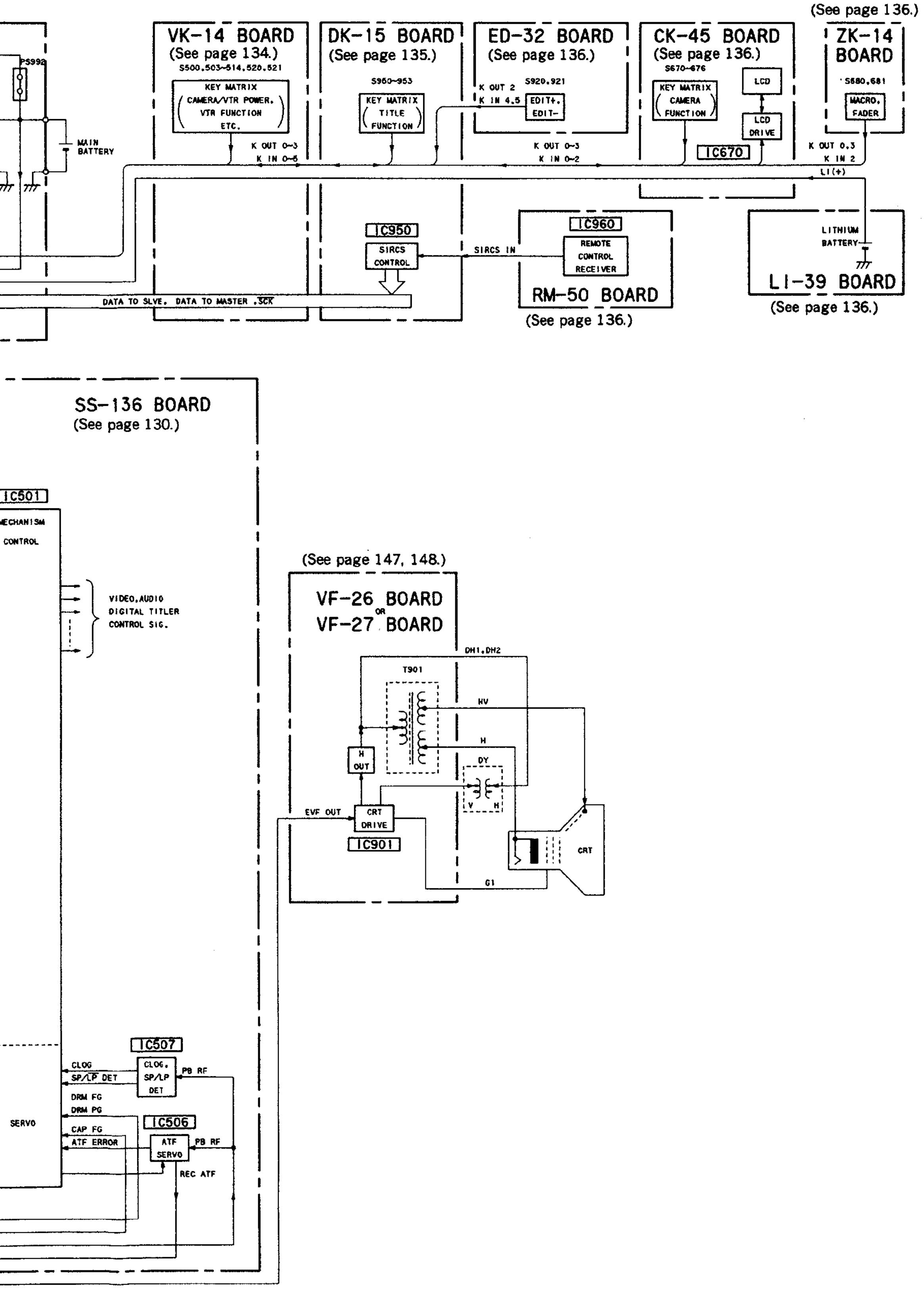
VK-14 BOARD
(See page 134.)
S500,503~514,520,521
KEY MATRIX
CAMERA/VTR POWER, VTR FUNCTION ETC.
DK-15 BOARD
(See page 135.)
S950~953
KEY MATRIX
TITLE FUNCTION
ED-32 BOARD
(See page 136.)
S920,921
K OUT 2
K IN 4,5
EDIT+, EDIT-
CK-45 BOARD
(See page 136.)
S670~676
KEY MATRIX
CAMERA FUNCTION
LCD
LCD DRIVE
IC670
(See page 136.)
ZK-14 BOARD
S680,681
MACRO, FADER
K OUT 0~3
K IN 0~5
K OUT 0~3
K IN 0~2
K OUT 0,3
K IN 2
LI(+)
MAIN BATTERY
PS992
IC950
SIRCS CONTROL
SIRCS IN
IC960
REMOTE CONTROL RECEIVER
RM-50 BOARD
(See page 136.)
LITHIUM BATTERY
LI-39 BOARD
(See page 136.)
DATA TO SLVE, DATA TO MASTER, SCK
SS-136 BOARD
(See page 130.)
IC501
MECHANISM CONTROL
VIDEO,AUDIO
DIGITAL TITLER
CONTROL SIG.
(See page 147, 148.)
VF-26 BOARD
OR
VF-27 BOARD
DH1,DH2
T901
HV
H
DY
V
H
H OUT
EVF OUT
CRT DRIVE
IC901
CRT
G1
IC507
CLOG
SP/LP DET
CLOG, SP/LP DET
PB RF
DRM FG
DRM PG
SERVO
IC506
CAP FG
ATF ERROR
ATF SERVO
PB RF
REC ATF

3-3. CAMERA (1) BLOCK DIAGRAM

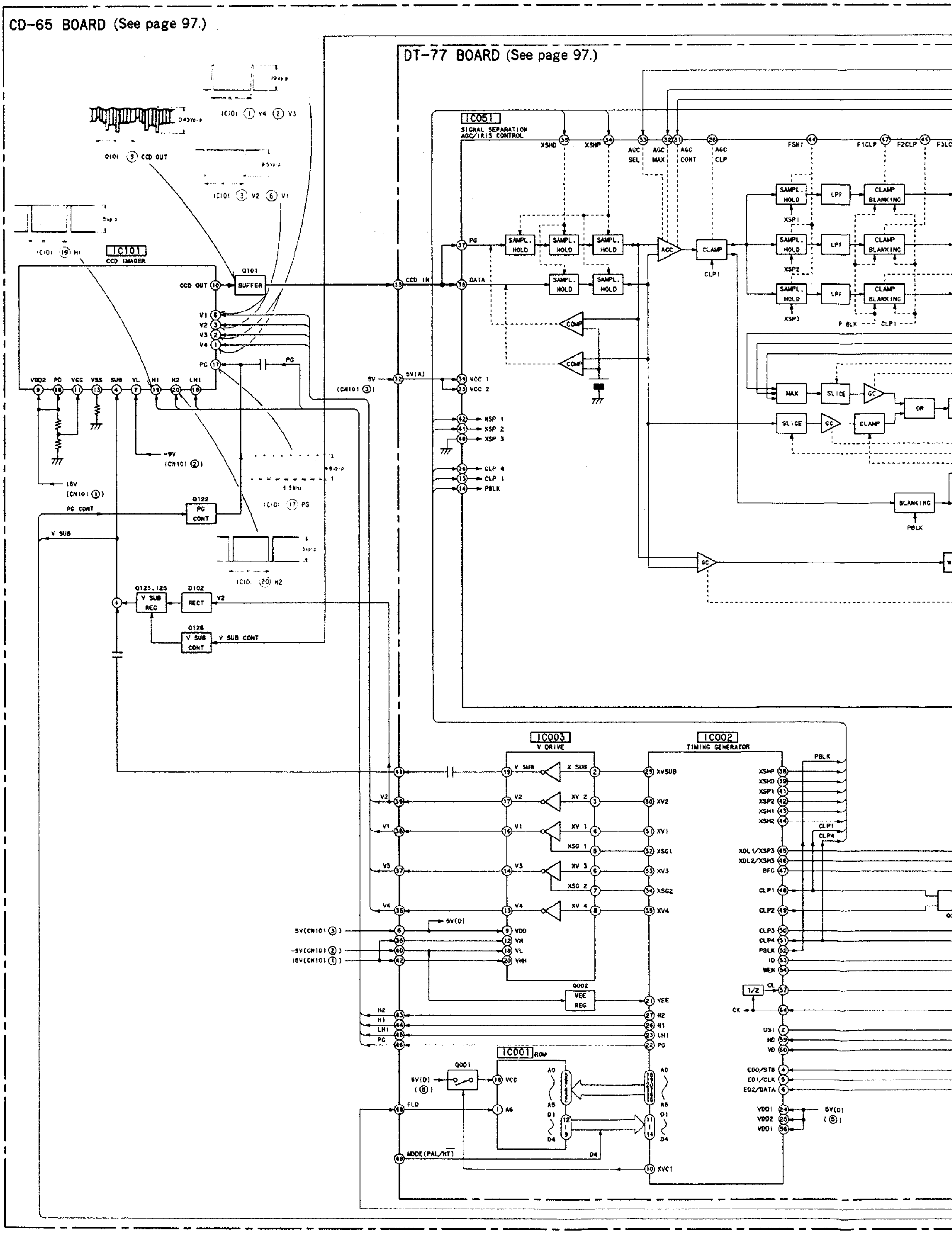

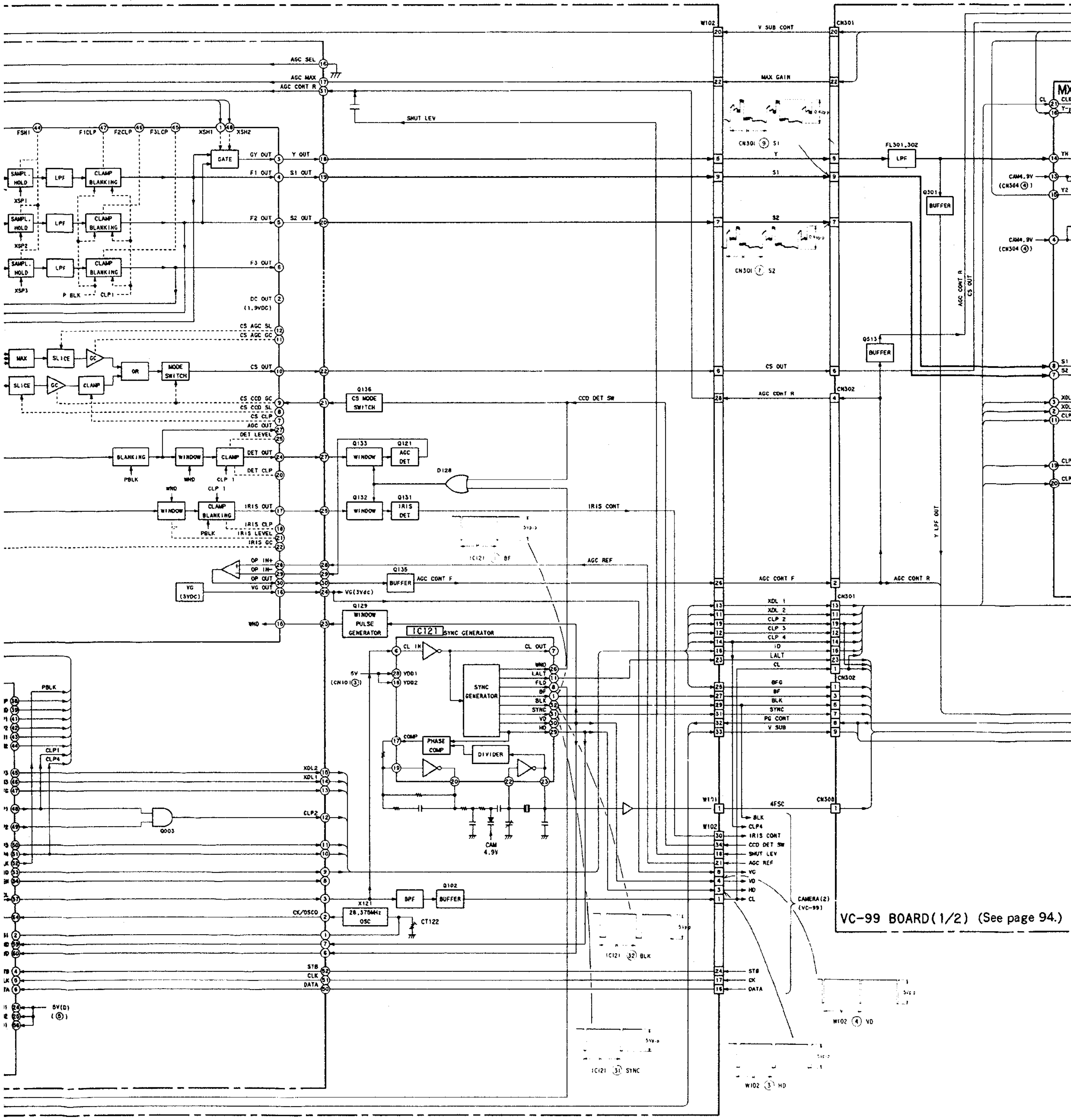
IC121 SYNC GENERATOR
VC-99 BOARD(1/2) (See page 94.)

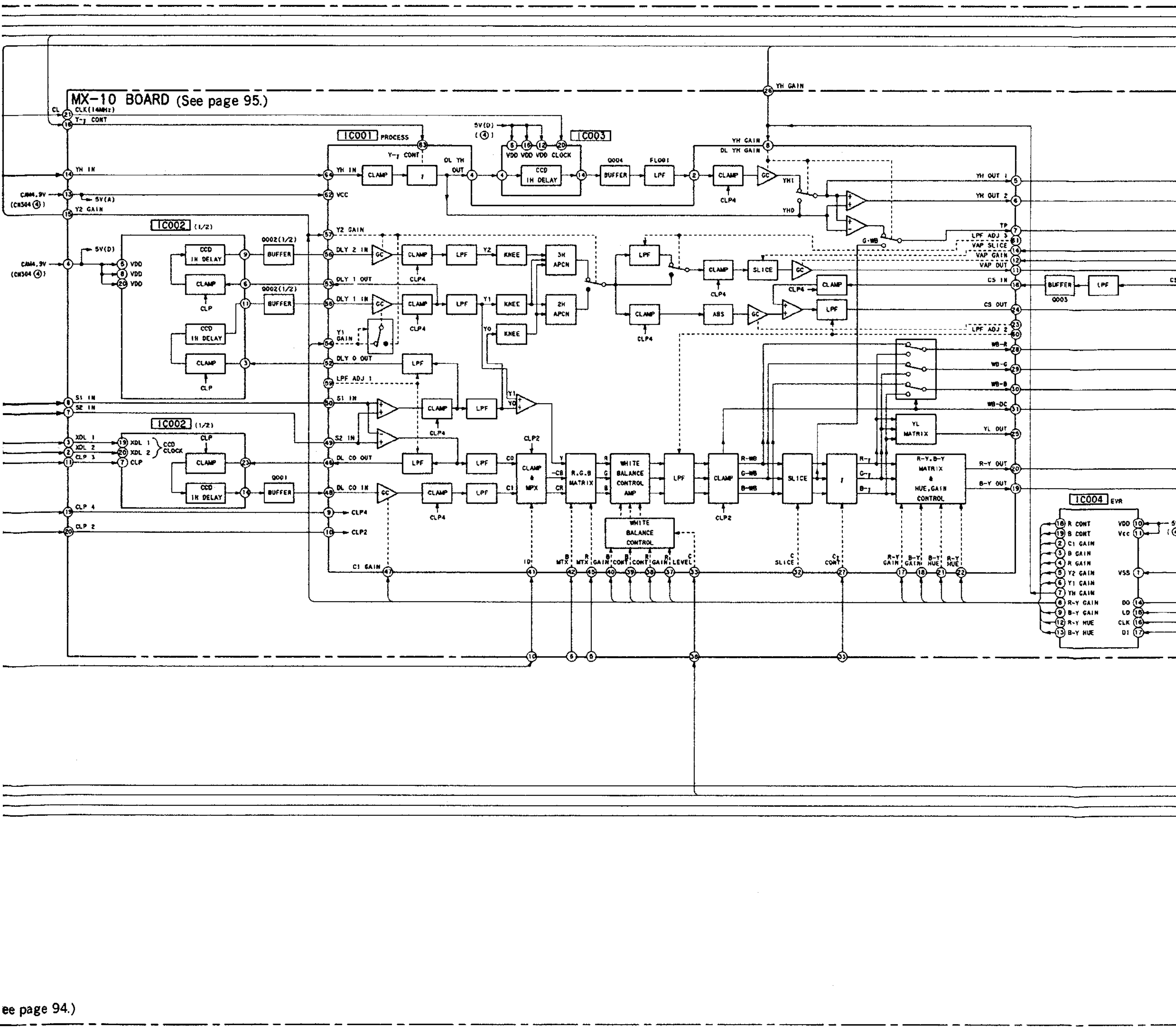

MX-10 BOARD (See page 95.)
IC001 PROCESS
IC002 (1/2)
IC002 (1/2)
IC003
IC004 EVR
ee page 94.)

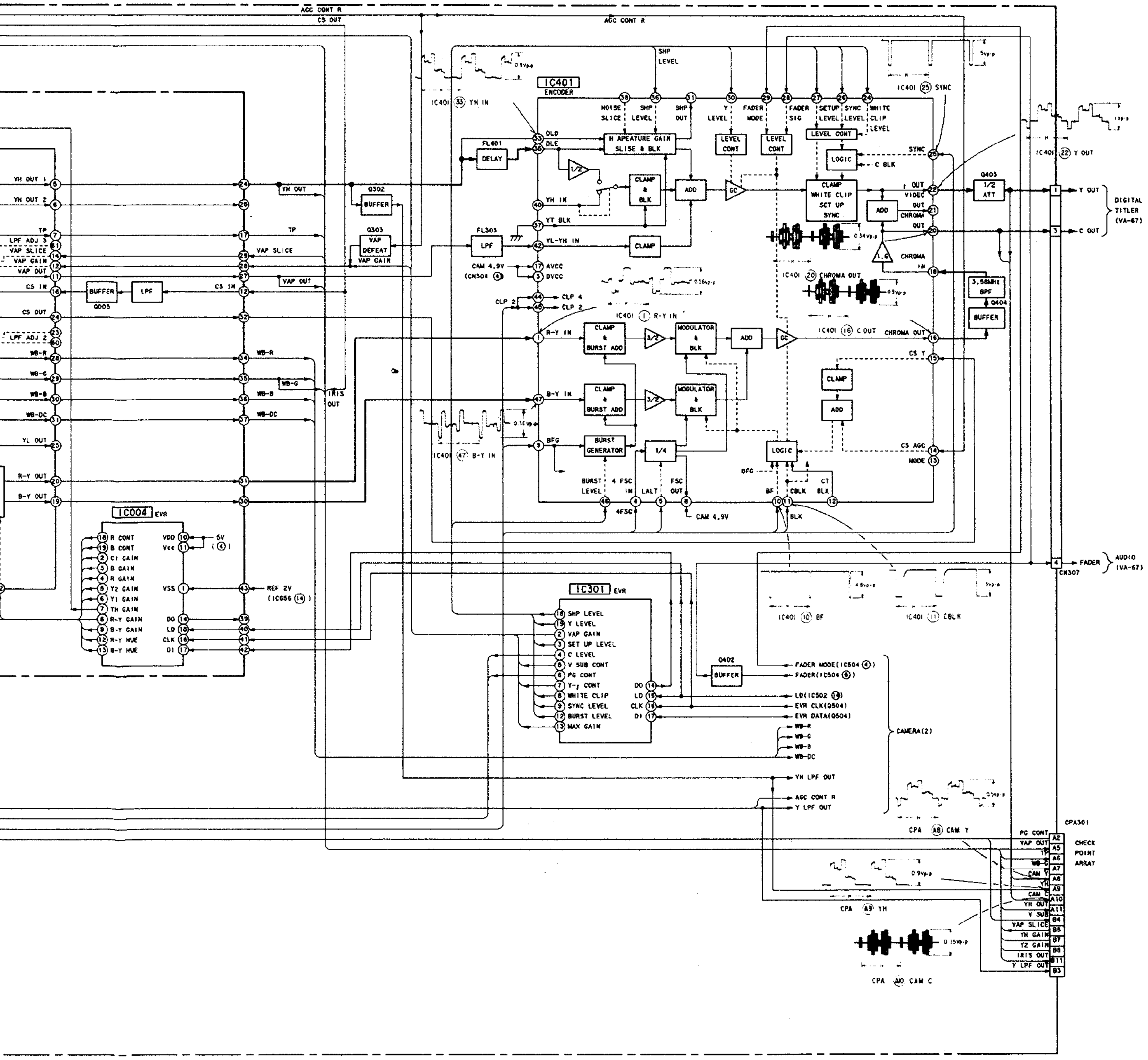
IC401
ENCODER
IC301
EVR
IC004
EVR
DIGITAL TITLER (VA-67)
AUDIO (VA-67)
CAMERA(2)
CHECK POINT ARRAY
CPA301
CN307
Y OUT
C OUT
FADER
ACC CONT R
CS OUT
Q302
BUFFER
Q303
VAP DEFEAT
Q403
1/2 ATT
Q404
BUFFER
Q402
BUFFER
Q003
FL401
DELAY
FL303
LPF
H APEATURE GAIN SLISE & BLK
CLAMP WHITE CLIP SET UP SYNC
MODULATOR & BLK
BURST GENERATOR
3.58MHz BPF
SHP LEVEL
Y LEVEL
VAP GAIN
SET UP LEVEL
C LEVEL
V SUB CONT
PG CONT
WHITE CLIP
SYNC LEVEL
BURST LEVEL
MAX GAIN
R CONT
B CONT
R GAIN
B GAIN
R-Y GAIN
B-Y GAIN
R-Y HUE
B-Y HUE
FADER MODE(IC504 ④)
FADER(IC504 ⑥)
EVR CLK(Q504)
EVR DATA(Q504)
YH LPF OUT
Y LPF OUT
CAM 4.9V
REF 2V
IC401 ㉝ YH IN
IC401 ㉕ SYNC
IC401 ㉒ Y OUT
IC401 ⑳ CHROMA OUT
IC401 ① R-Y IN
IC401 ⑯ C OUT
IC401 ㊼ B-Y IN
IC401 ⑩ BF
IC401 ⑪ CBLK
CPA A8 CAM Y
CPA A9 YH
CPA A10 CAM C

3-4. CAMERA SYSTEM CONTROL VC-99 BOARD IC501 (MC68HC11E9)

〔Description〕

MC68HC11E9 is a 8-bit one-chip micro controller with a built-in nonvolatile memory (EEPROM). All the camera system, which has been composed by mere than one, can be controlled by only this micro controller. In addition, protocol master control of the LANC communication can be performed.

1. Function

1) EVR Control
2) AWB Control
3) AE Control
4) AF Control
5) LANC communication protocol control

2. Pin Description

PIN No.	PIN Name	I/O	Function
1	AE	I	AE Integration-type A/D converter comparator input
2	NC	—	——
3	NC	—	——
4	NC	—	——
5	DISCHG	O	AWB. AE Integration-type A/D reset pulse
6	B SELECT	O	AWB Instrumentation line select pulse (blue)
7	G SELECT	O	AWB Instrumentation line select pulse (green)
8	R SELECT	O	AWB Instrumentation line select pulse (red)
9	DECODE D	O	Decode 4 to 10 and expand port with outside IC (4208)
10	DECODE C	O	Decode 4 to 10 and expand port with outside IC (4208)
11	DECODE B	O	Decode 4 to 10 and expand port with outside IC (4208)
12	DECODE A	O	Decode 4 to 10 and expand port with outside IC (4208)
13	NC	—	——
14	HALL SENS	I	Hall element voltage input (Analog input)
15	ZOOM SENS	I	Zoom position detection voltage input (Analog input)
16	AGC CONT	I	AGC voltage input (Analog input)
17	ZOOM KEY	I	Zoom switch voltage input (Analog input)
18	AF A/D 1	I	AF peak hold Data1 input (Analog input)
19	AF A/D 2	I	AF peak hold Data2 input (Analog input)
20	AF A/D 3	I	AF peak hold Data3 input (Analog input)
21	A/D REF(−)	—	Built-in A/D converter the minimum standard voltage (Analog input)
22	A/D REF(+)	—	Built-in A/D converter the minimum standard voltage (Analog input)
23	V_{SS}	—	GND
24	V_{SS}	—	GND
25	MODE B	I	Pull up to SS4.9V
26	NC	—	——
27	MODA	I	Pull down to GND
28	STR A	—	NC Not used
29	E	—	NC Not used
30	STR B	—	NC Not used

PIN No.	PIN Name	I/O	Function
31	EXTAL	O	Built-in inverter output for oscillating element
32	NC	—	——
33	XTAL	I	Built-in inverter input for oscillating element
34	CAM POWER	I	Camera power source rise supervision
35	NC	—	——
36	F SENS1	I	Focus sensor 1 voltage entrance (Analog input)
37	PC2	I	Pull up to SS4.9V
38	F SENS2	I	Focus sensor 2 voltage entrance (Analog input)
39	CCD DET SW	O	CCD DET switch select
40	$\overline{\text{MAN IRIS}}$	O	NC
41	ZOOM T	O	Zoom motor T-direction rotating designation
42	ZOOM W	O	Zoom motor W-direction rotating designation
43	$\overline{\text{RESET}}$	I	Reset
44	NC	—	——
45	$\overline{\text{XIRQ}}$	I	Pull up to SS4.9V
46	$\overline{\text{IRQ}}$	I	Pull up to SS4.9V
47	LANC IN	I	LANC input
48	NC	—	——
49	V_{SS}	—	GND
50	LANC OUT	O	LANC output
51	CAM SI	I	Serial data input
52	CAM SO	O	Serial data output
53	SCK	O	Serial clock
54	SENS DRIVE	O	AF sensor Luminous pulse output
55	V_{DD}	—	SS4.9V
56	HOLD RESET	O	V Peak Hold reset pulse output
57	FOCUS ∞	O	Focus motor ∞-direction rotating designation
58	XVD	O	V frame for AF distance measurement
59	$\overline{\text{MAN GAIN}}$	O	NC
60	NC	—	——
61	NC	—	——
62	$\overline{\text{FOCUS N}}$	O	Focus motor N-direction rotating designation
63	$\overline{\text{CAMCS}}$	I	Camera chip select input
64	$\overline{\text{AW IN}}$	I	AWB Integration-type A/D converter comparator input

3-5. CAMERA (2) BLOCK DIAGRAM

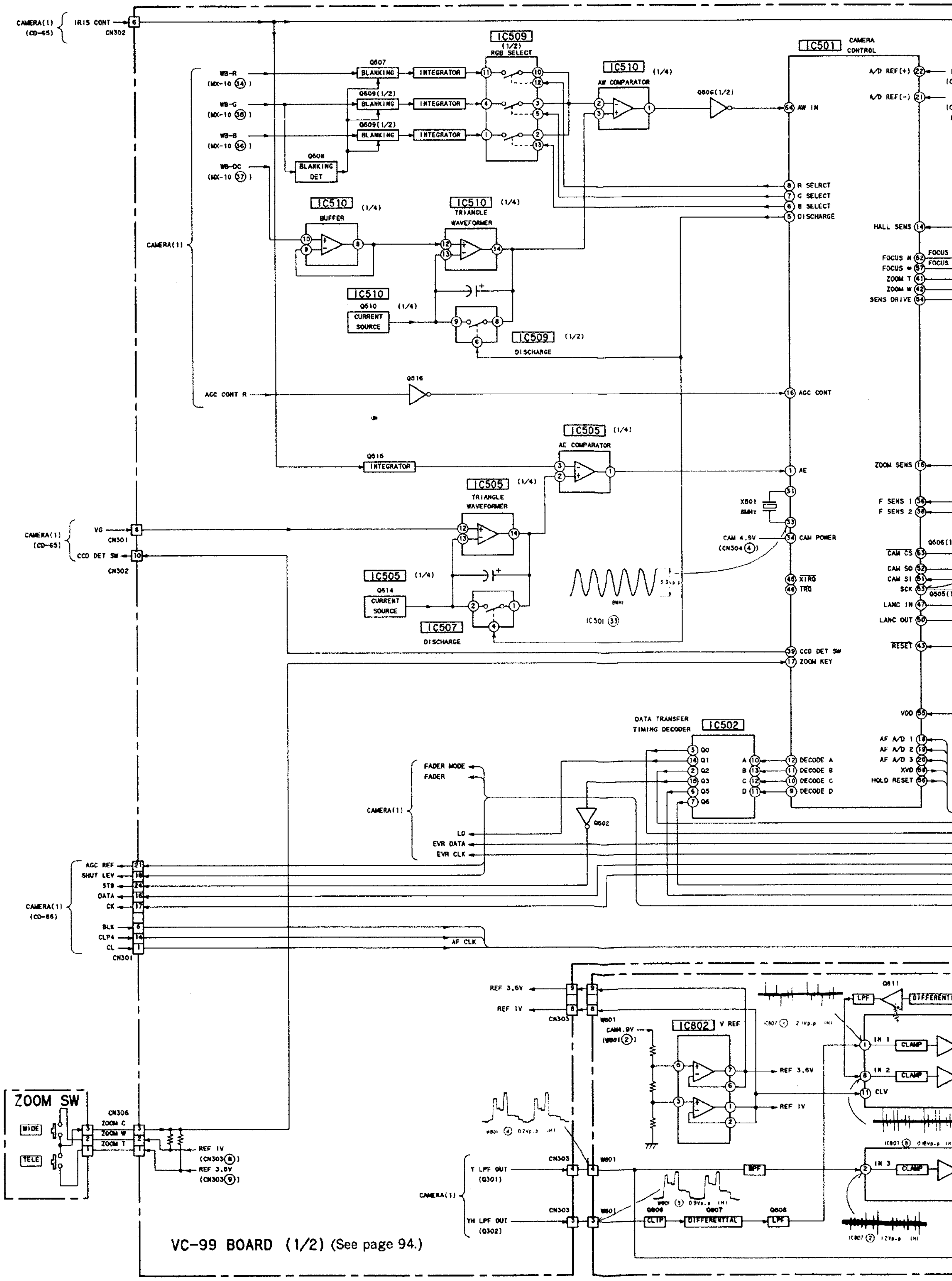

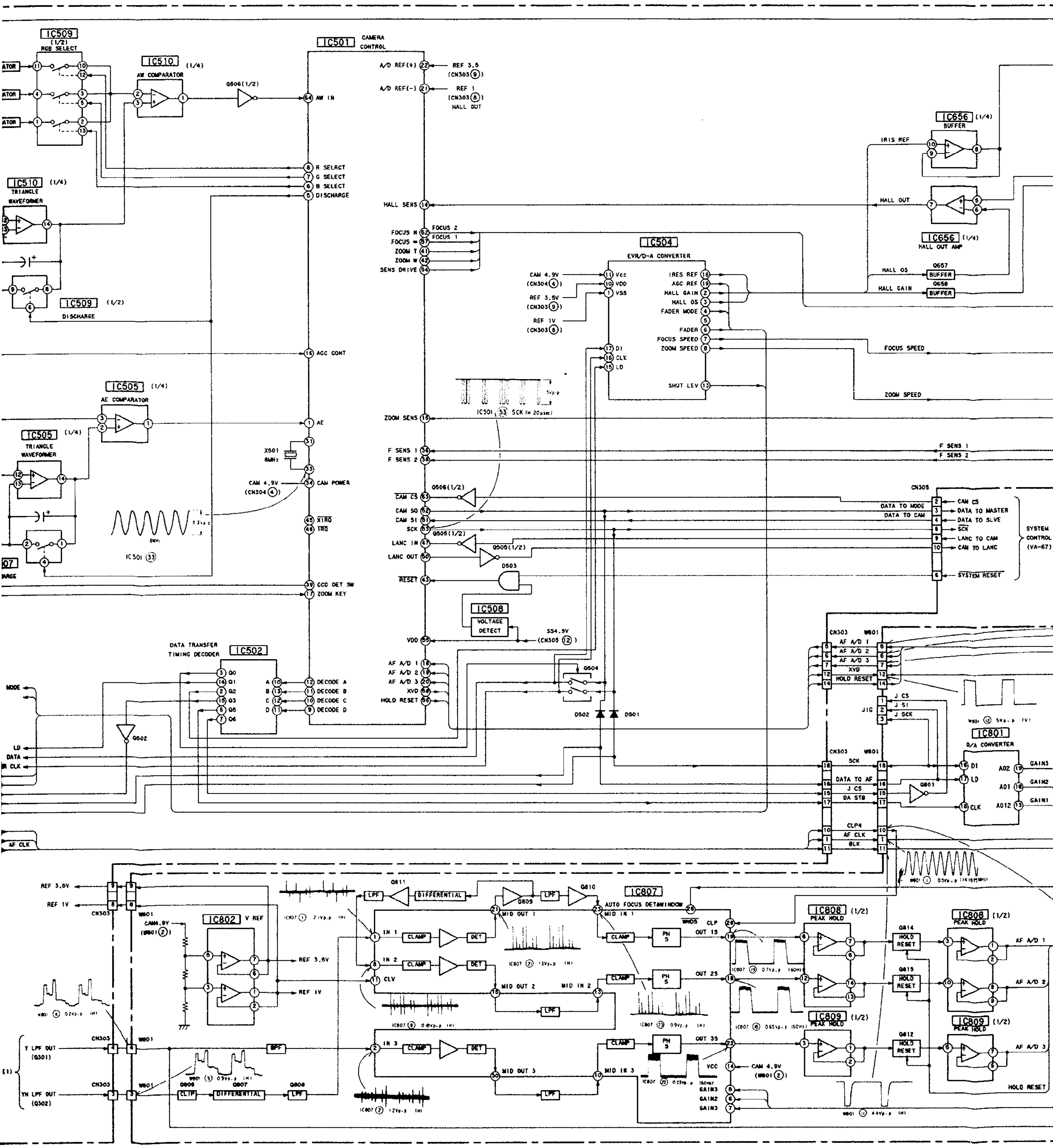
IC509 (1/2) RGB SELECT
IC510 (1/4) AW COMPARATOR
Q606(1/2)
IC501 CAMERA CONTROL
A/D REF(+)
A/D REF(-)
REF 3.5 (CN303 9)
REF 1 (CN303 8) HALL OUT
AW IN
R SELECT
G SELECT
B SELECT
DISCHARGE
IC510 (1/4) TRIANGLE WAVEFORMER
IC509 (1/2) DISCHARGE
HALL SENS
FOCUS N
FOCUS ∞
ZOOM T
ZOOM W
SENS DRIVE
FOCUS 2
FOCUS 1
IC656 (1/4) BUFFER
IRIS REF
HALL OUT
IC656 (1/4) HALL OUT AMP
HALL OS
HALL GAIN
Q657 BUFFER
Q658 BUFFER
IC504 EVR/D-A CONVERTER
CAM 4.9V (CN304 4)
REF 3.5V (CN303 9)
REF 1V (CN303 8)
Vcc
VDD
VSS
IRES REF
AGC REF
HALL GAIN
HALL OS
FADER MODE
FADER
FOCUS SPEED
ZOOM SPEED
DI
CLK
LD
SHUT LEV
FOCUS SPEED
ZOOM SPEED
AGC CONT
IC505 (1/4) AE COMPARATOR
AE
IC505 (1/4) TRIANGLE WAVEFORMER
X501 8MHz
CAM 4.9V (CN304 4)
CAM POWER
XTRO
TRO
IC501 33
IC501 53 SCK (H 20μsec)
5Vp-p
ZOOM SENS
F SENS 1
F SENS 2
Q506(1/2)
CAM CS
CAM SO
CAM SI
SCK
Q505(1/2)
LANC IN
LANC OUT
RESET
D503
CN305
DATA TO MODE
DATA TO CAM
CAM CS
DATA TO MASTER
DATA TO SLVE
SCK
LANC TO CAM
CAM TO LANC
SYSTEM RESET
SYSTEM CONTROL (VA-67)
CCD DET SW
ZOOM KEY
IC508 VOLTAGE DETECT
SS4.9V (CN305 12)
VDD
DATA TRANSFER TIMING DECODER
IC502
DECODE A
DECODE B
DECODE C
DECODE D
AF A/D 1
AF A/D 2
AF A/D 3
XVD
HOLD RESET
Q504
D502
D501
Q502
MODE
LD
DATA
CLK
AF CLK
CN303
W801
XVD
HOLD RESET
J CS
J SI
J SCK
JIG
IC801 D/A CONVERTER
DATA TO AF
DA STB
Q801
GAIN3
GAIN2
GAIN1
CLP4
AF CLK
BLK
REF 3.6V
REF 1V
IC802 V REF
CAM4.9V (W801 2)
Q811
LPF
DIFFERENTIAL
Q809
Q810
IC807
AUTO FOCUS DETA WINDOW
IN 1
IN 2
IN 3
CLAMP
DET
MID OUT 1
MID OUT 2
MID OUT 3
MID IN 1
MID IN 2
MID IN 3
CLV
WHDS
CLP
OUT 1S
OUT 2S
OUT 3S
PH S
VCC
CAM 4.9V (W801 2)
GAIN3
GAIN2
GAIN1
IC808 (1/2) PEAK HOLD
IC809 (1/2) PEAK HOLD
Q814 HOLD RESET
Q815 HOLD RESET
Q812 HOLD RESET
AF A/D 1
AF A/D 2
AF A/D 3
HOLD RESET
Y LPF OUT (Q301)
YH LPF OUT (Q302)
BPF
Q806 CLIP
Q807 DIFFERENTIAL
Q808 LPF

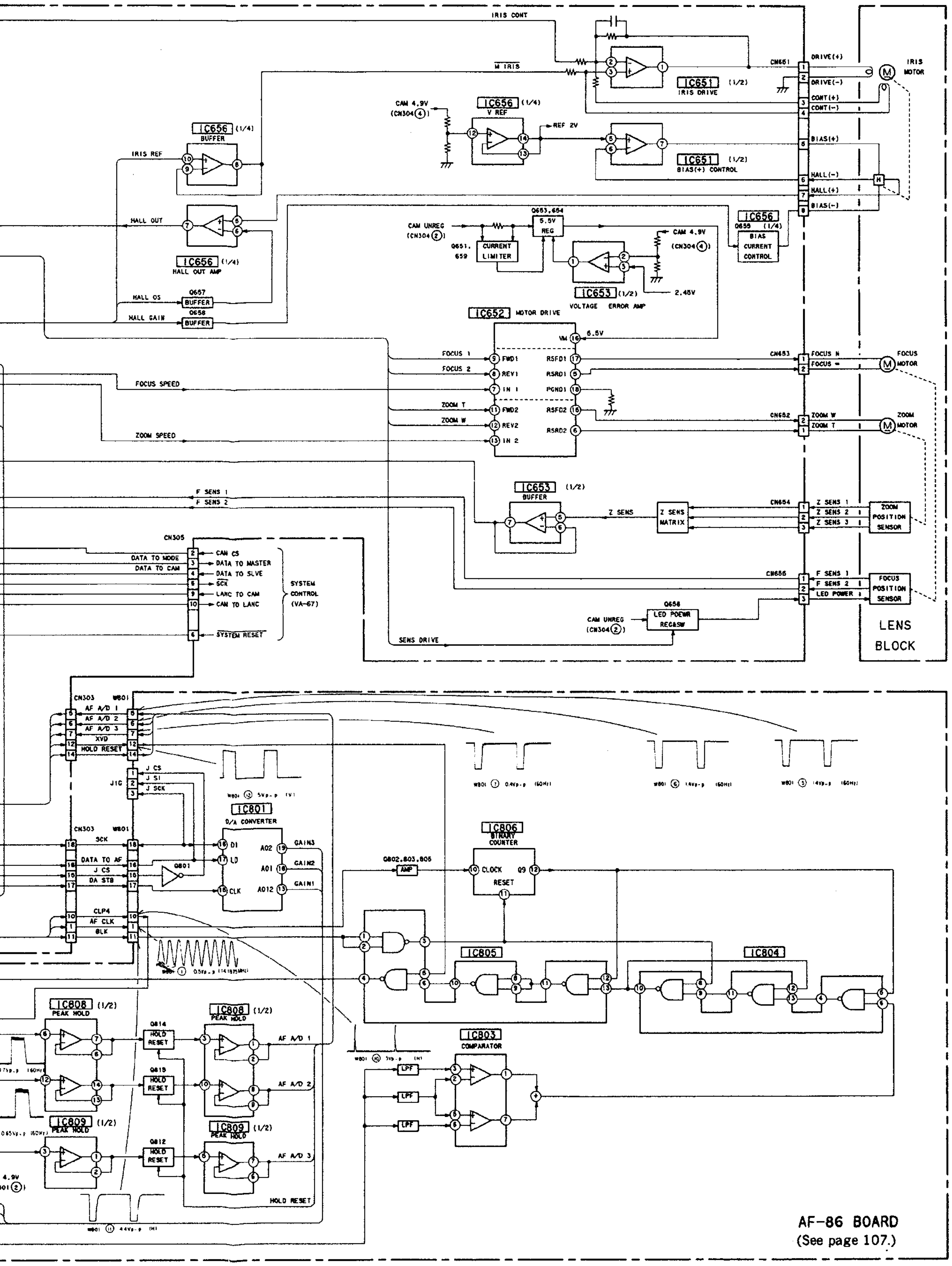
IRIS CONT
M IRIS
IC651 (1/2) IRIS DRIVE
CN651
DRIVE(+)
DRIVE(−)
CONT(+)
CONT(−)
IRIS MOTOR
CAM 4.9V (CN304④)
IC656 (1/4) V REF
REF 2V
IC656 (1/4) BUFFER
IRIS REF
BIAS(+)
IC651 (1/2) BIAS(+) CONTROL
HALL(−)
HALL(+)
BIAS(−)
HALL OUT
IC656 (1/4) HALL OUT AMP
Q653,654 5.5V REG
CAM UNREG (CN304②)
Q651, 659 CURRENT LIMITER
CAM 4.9V (CN304④)
IC656 Q655 (1/4) BIAS CURRENT CONTROL
IC653 (1/2) VOLTAGE ERROR AMP
2.45V
HALL OS
Q657 BUFFER
HALL GAIN
Q658 BUFFER
IC652 MOTOR DRIVE
6.5V
FOCUS 1
FOCUS 2
FOCUS SPEED
ZOOM T
ZOOM W
ZOOM SPEED
FWD1
REV1
IN 1
FWD2
REV2
IN 2
VM
RSFD1
RSRD1
PGND1
RSFD2
RSRD2
CN653
FOCUS N
FOCUS
FOCUS MOTOR
CN652
ZOOM W
ZOOM T
ZOOM MOTOR
F SENS 1
F SENS 2
IC653 (1/2) BUFFER
Z SENS
Z SENS MATRIX
CN654
Z SENS 1
Z SENS 2
Z SENS 3
ZOOM POSITION SENSOR
CN305
DATA TO MODE
DATA TO CAM
CAM CS
DATA TO MASTER
DATA TO SLVE
SCK
LANC TO CAM
CAM TO LANC
SYSTEM RESET
SYSTEM CONTROL (VA-67)
CN655
F SENS 1
F SENS 2
LED POWER
FOCUS POSITION SENSOR
Q656 LED POEWR REG&SW
CAM UNREG (CN304②)
SENS DRIVE
LENS BLOCK
CN303
W801
AF A/D 1
AF A/D 2
AF A/D 3
XVD
HOLD RESET
J CS
J SI
J SCK
J16
W801 ⑦ 0.4Vp-p (50Hz)
W801 ⑥ 14Vp-p (50Hz)
W801 ⑤ 14Vp-p (50Hz)
W801 ⑫ 5Vp-p (V)
IC801 D/A CONVERTER
DI
LD
CLK
A02
A01
A012
GAIN3
GAIN2
GAIN1
DATA TO AF
J CS
DA STB
Q801
IC806 BINARY COUNTER
Q802,803,805 AMP
CLOCK
RESET
Q9
CLP4
AF CLK
BLK
W801 ① 0.5Vp-p (14.1875MHz)
IC805
IC804
IC808 (1/2) PEAK HOLD
Q814 HOLD RESET
AF A/D 1
Q815 HOLD RESET
AF A/D 2
IC809 (1/2) PEAK HOLD
Q812 HOLD RESET
AF A/D 3
HOLD RESET
W801 ⑩ 3Vp-p (H)
IC803 COMPARATOR
LPF
W801 ⑪ 4.4Vp-p (H)
4.9V
AF-86 BOARD
(See page 107.)

3-6. DIGITAL TITLER BLOCK DIAGRAM

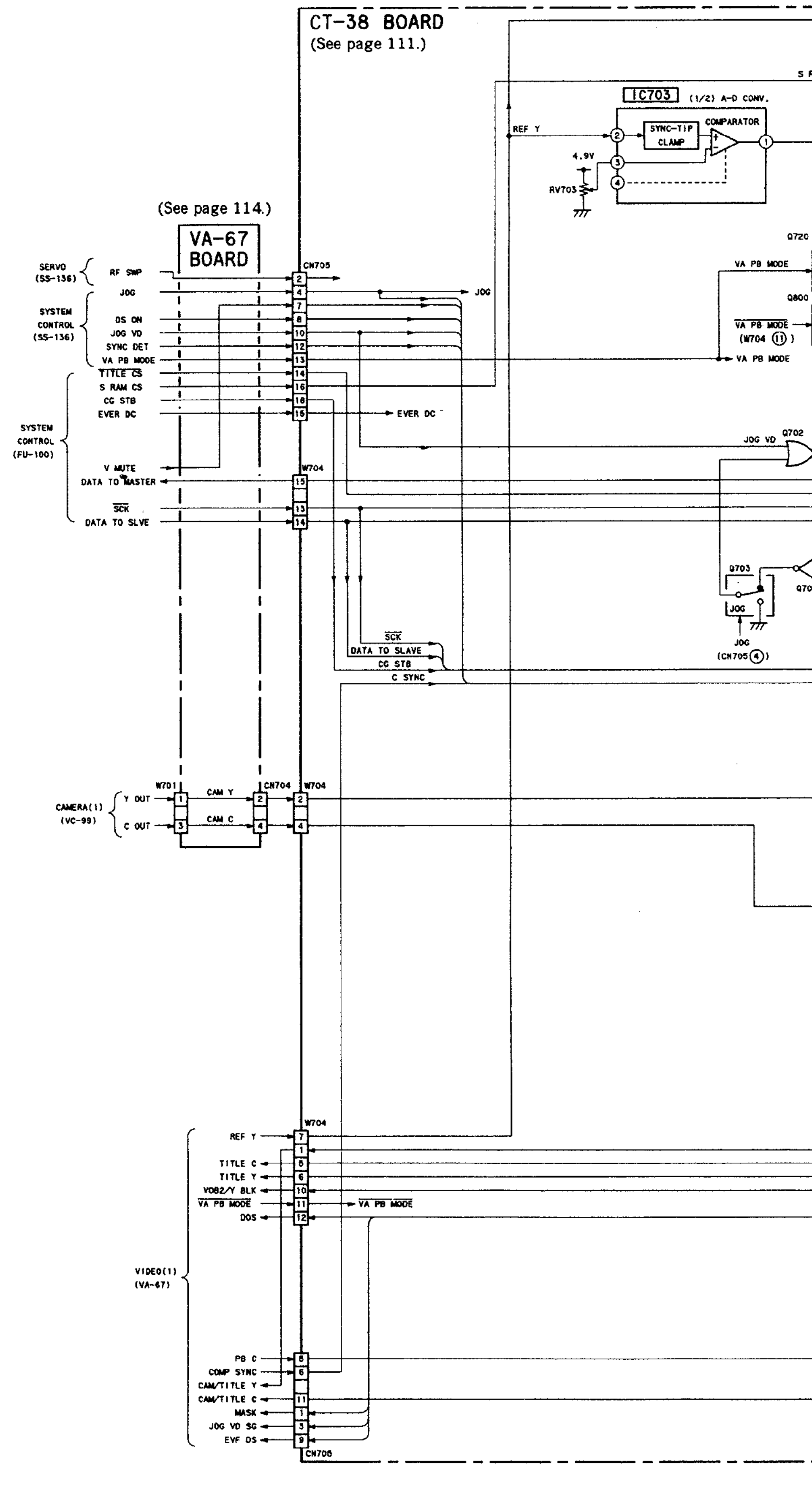

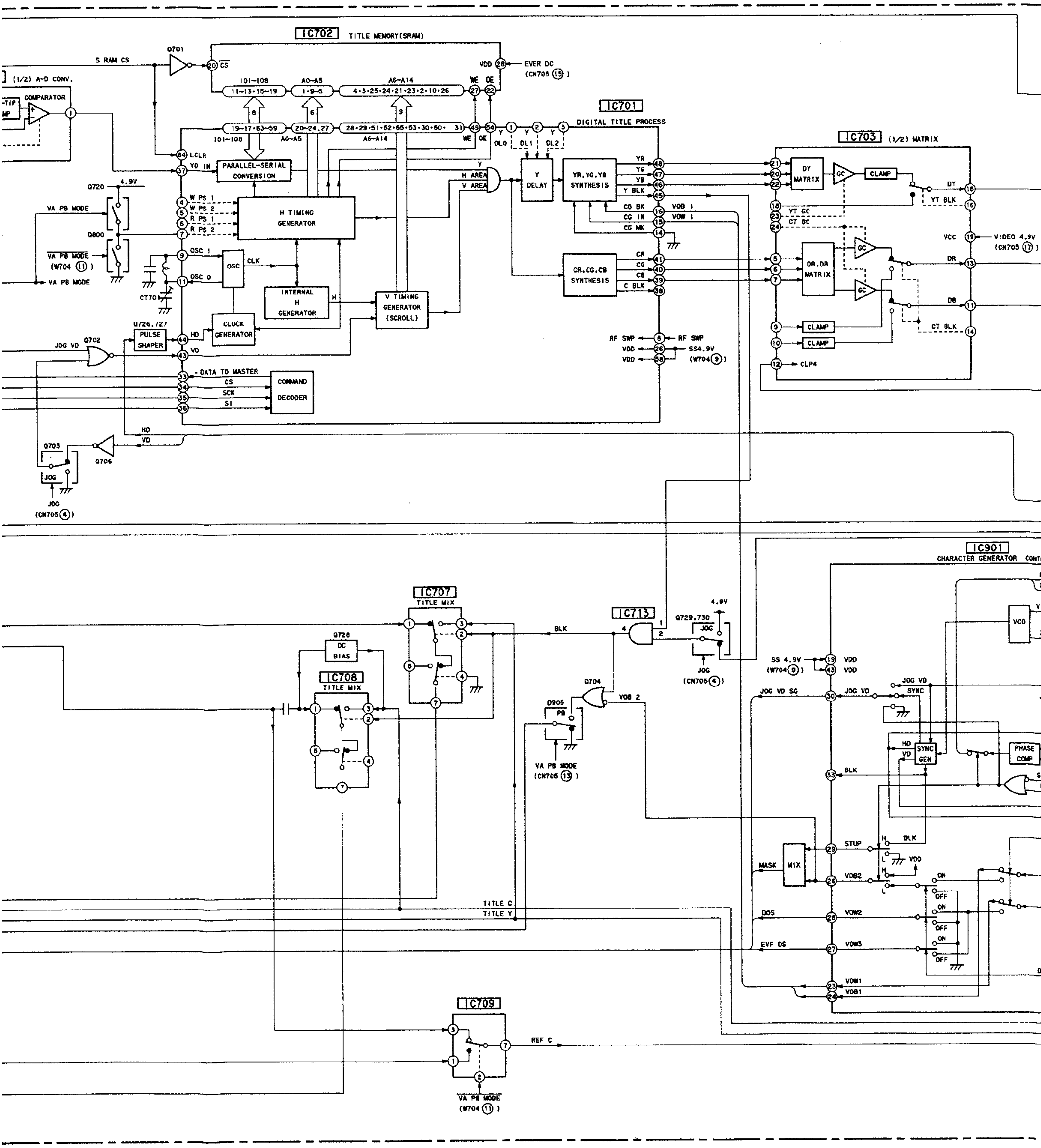
IC702 TITLE MEMORY(SRAM)
IC701 DIGITAL TITLE PROCESS
IC703 (1/2) MATRIX
IC901 CHARACTER GENERATOR
IC707 TITLE MIX
IC708 TITLE MIX
IC713
IC709
S RAM CS
(1/2) A-D CONV.
COMPARATOR
PARALLEL-SERIAL CONVERSION
H TIMING GENERATOR
INTERNAL H GENERATOR
V TIMING GENERATOR (SCROLL)
CLOCK GENERATOR
PULSE SHAPER
COMMAND DECODER
Y DELAY
YR,YG,YB SYNTHESIS
CR,CG,CB SYNTHESIS
DY MATRIX
DR,DB MATRIX
CLAMP
DC BIAS
VA PB MODE
JOG VD
EVER DC
VIDEO 4.9V
DATA TO MASTER
TITLE C
TITLE Y
REF C
BLK
SYNC GEN
PHASE COMP
VCO
MIX
MASK

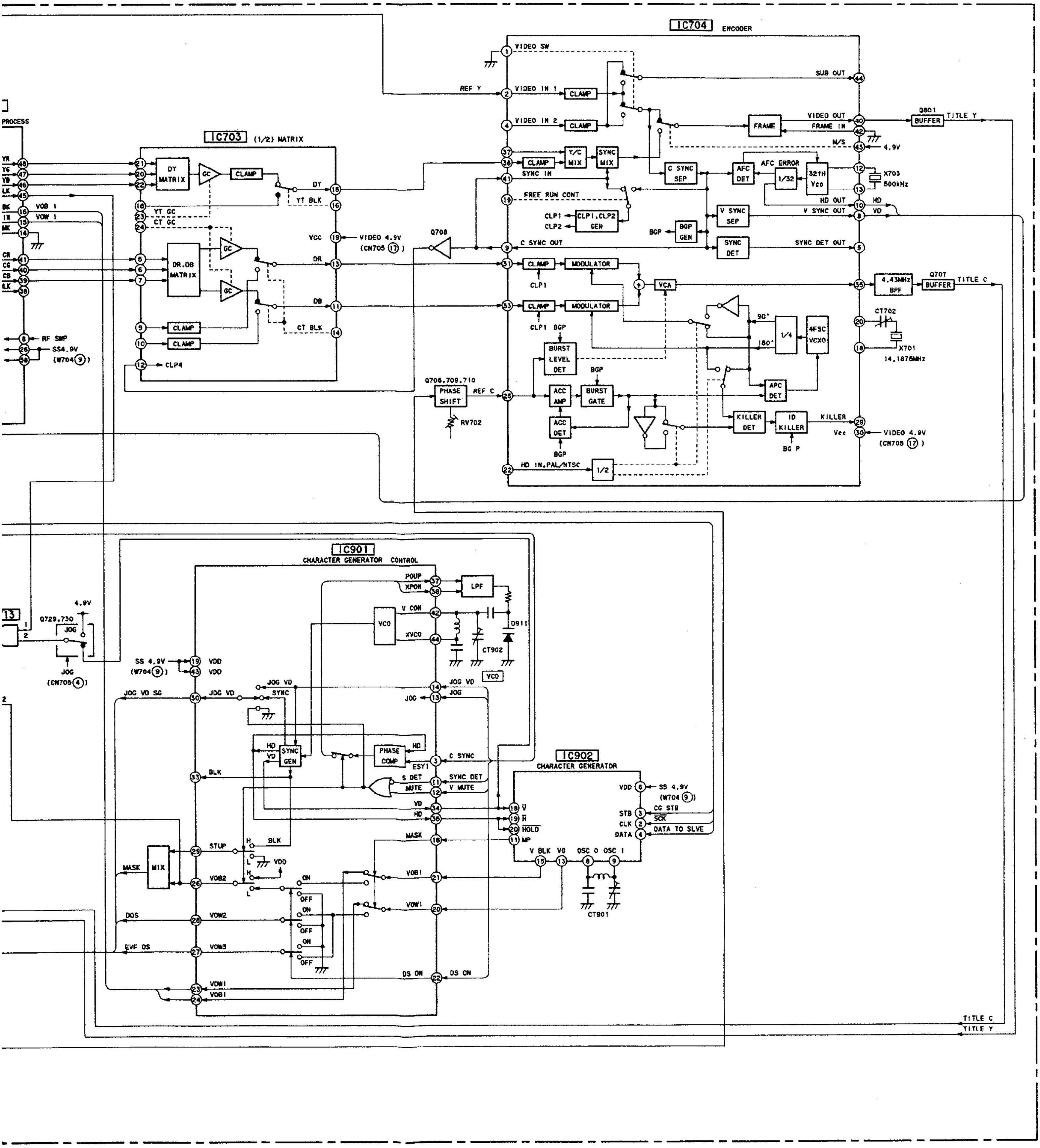
IC704 ENCODER
VIDEO SW
REF Y
VIDEO IN 1
VIDEO IN 2
CLAMP
Y/C MIX
SYNC MIX
SYNC IN
FREE RUN CONT
CLP1,CLP2 GEN
C SYNC SEP
AFC DET
AFC ERROR
1/32
321H VCO
FRAME
SUB OUT
VIDEO OUT
FRAME IN
M/S
HD OUT
V SYNC OUT
V SYNC SEP
BGP GEN
SYNC DET
SYNC DET OUT
C SYNC OUT
MODULATOR
VCA
4.43MHz BPF
Q707 BUFFER
Q801 BUFFER
TITLE Y
TITLE C
X703 500kHz
CT702
X701 14.1875MHz
4FSC VCXO
1/4
90°
180°
BURST LEVEL DET
ACC AMP
BURST GATE
ACC DET
APC DET
KILLER DET
ID KILLER
KILLER
VIDEO 4.9V (CN705 17)
HD IN,PAL/NTSC
1/2
Q705,709,710
PHASE SHIFT
REF C
RV702
Q708
IC703 (1/2) MATRIX
PROCESS
DY MATRIX
GC
DR,DB MATRIX
YT GC
CT GC
YT BLK
CT BLK
DY
DR
DB
VCC
CLP4
RF SWP
SS4.9V (W704 9)
VOB 1
VOW 1
IC901 CHARACTER GENERATOR CONTROL
POUP
XPON
LPF
VCO
V CON
XVCO
D911
CT902
SS 4.9V (W704 9)
VDD
JOG VD
SYNC
JOG
JOG VD SG
SYNC GEN
PHASE COMP
C SYNC
ESY1
S DET
MUTE
SYNC DET
V MUTE
BLK
STUP
MIX
MASK
VOB1
VOB2
VOW1
VOW2
VOW3
DOS
EVF DS
DS ON
ON
OFF
Q729,730
4.9V
JOG (CN705 4)
IC902 CHARACTER GENERATOR
CG STB
SCK
DATA TO SLVE
HOLD
MP
V BLK
VG
OSC 0
OSC 1
CT901

3-7. VIDEO (1) BLOCK DIAGRAM

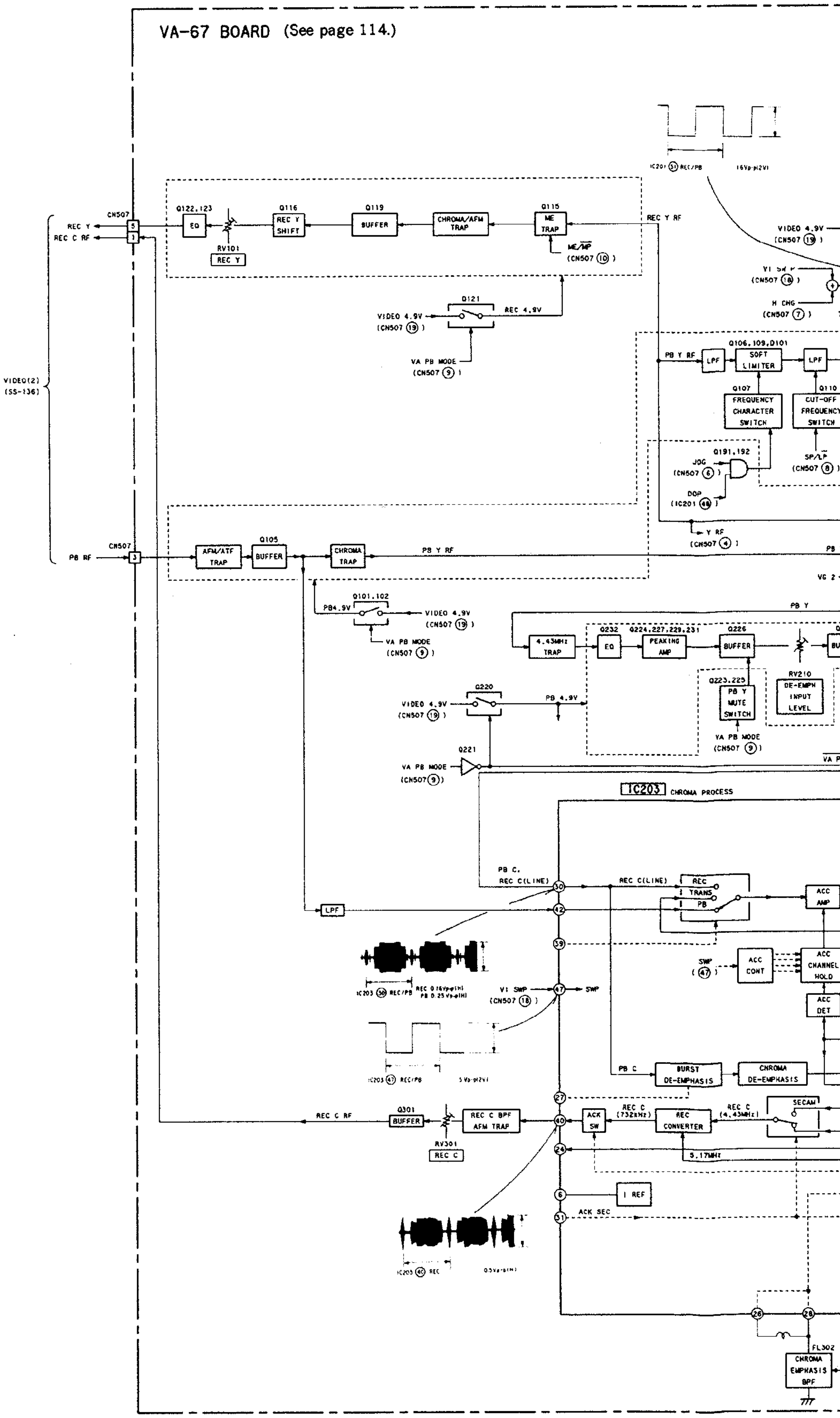

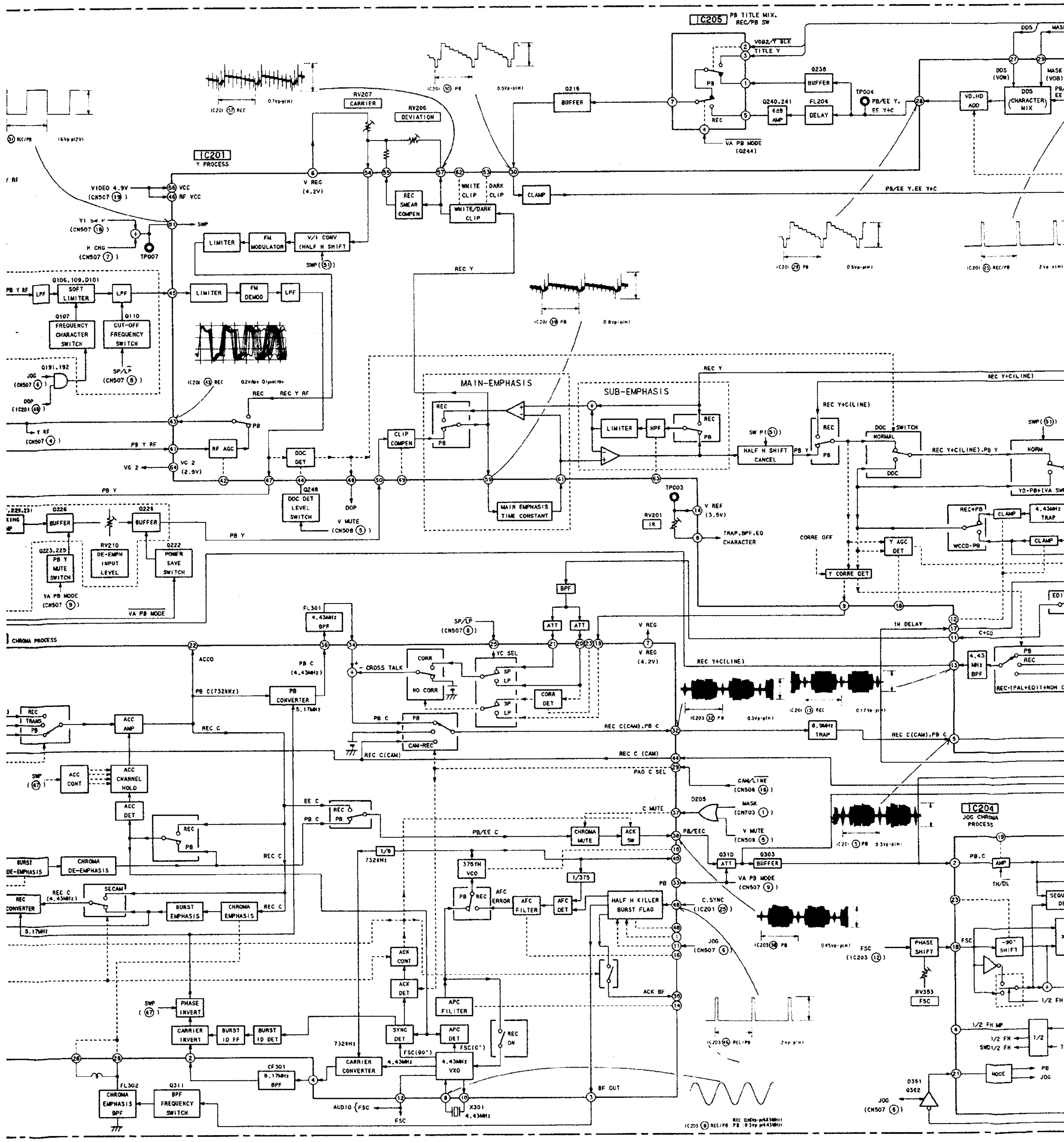
IC205 PB TITLE MIX, REC/PB SW
IC201 Y PROCESS
MAIN-EMPHASIS
SUB-EMPHASIS
IC204 JOG CHROMA PROCESS
CHROMA PROCESS

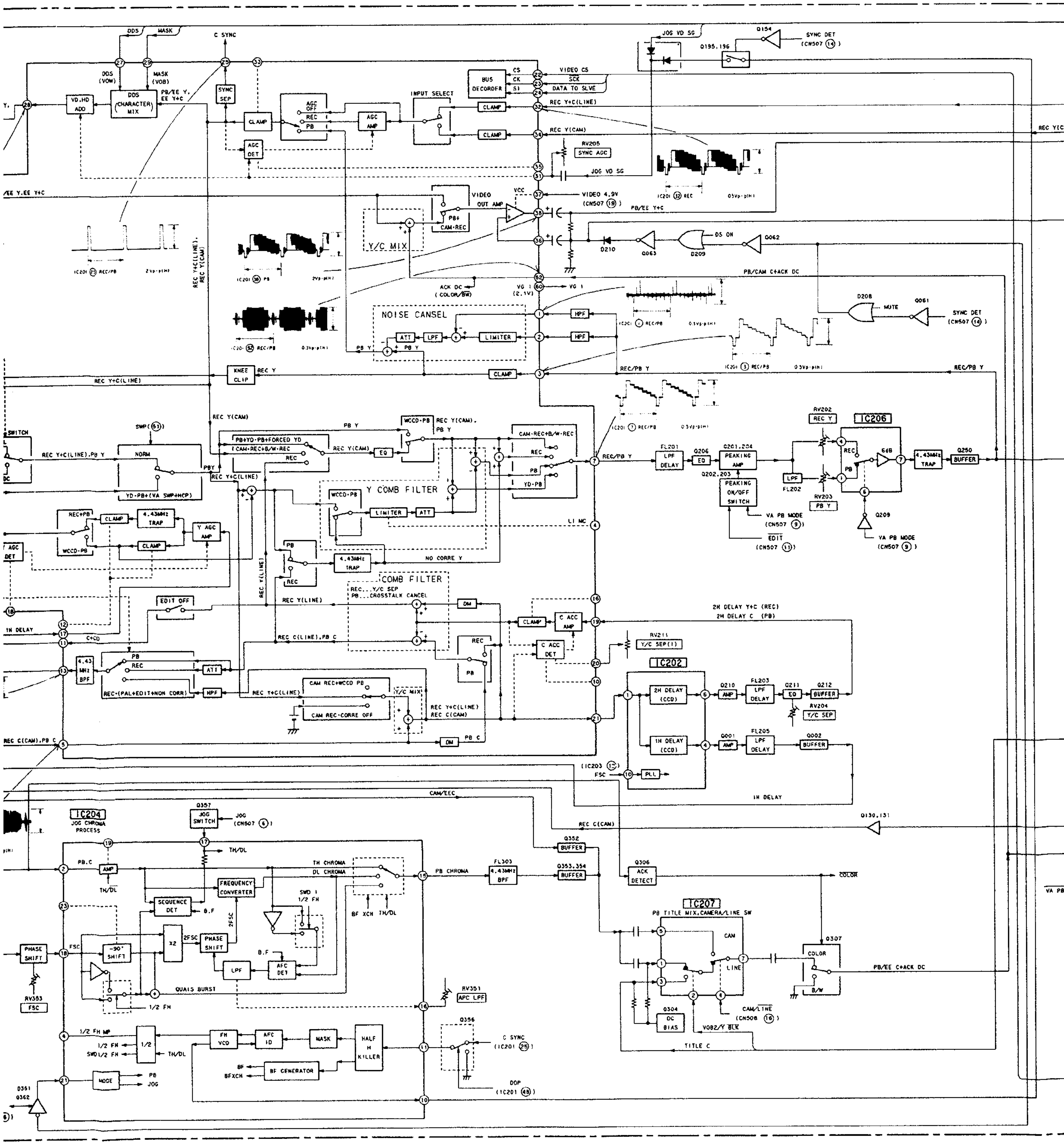
C SYNC
DDS
MASK
VD.HD ADD
DDS (CHARACTER) MIX
SYNC SEP
CLAMP
AGC DET
AGC OFF
REC
PB
AGC AMP
INPUT SELECT
BUS DECORDER
VIDEO CS
SCK
DATA TO SLVE
REC Y+C(LINE)
REC Y(CAM)
RV205
SYNC AGC
JOG VD SG
Q154
SYNC DET
Q195,196
VIDEO 4.9V
VIDEO OUT AMP
Y/C MIX
PB/EE Y+C
DS ON
Q062
Q063
D210
D209
PB/CAM C+ACK DC
ACK DC (COLOR/BW)
VG 1
NOISE CANSEL
ATT
LPF
LIMITER
HPF
D208
MUTE
Q061
KNEE CLIP
REC Y
REC/PB Y
REC Y(CAM)
PB Y
WCCD+PB
EQ
NORM
YD-PB+(VA SWP+HCP)
Y COMB FILTER
CAM+REC+B/W+REC
YD-PB
LI MC
FL201
LPF DELAY
Q206
Q201,204
PEAKING AMP
Q202,203
PEAKING ON/OFF SWITCH
RV202
IC206
FL202
RV203
4.43MHz TRAP
Q250
BUFFER
Q209
VA PB MODE
EDIT
Y AGC AMP
NO CORRE Y
COMB FILTER
REC...Y/C SEP
PB...CROSSTALK CANCEL
EDIT OFF
REC Y(LINE)
DM
C ACC AMP
C ACC DET
2H DELAY Y+C (REC)
2H DELAY C (PB)
RV211
Y/C SEP(1)
IC202
2H DELAY (CCD)
1H DELAY (CCD)
Q210
FL203
Q211
Q212
RV204
Y/C SEP
Q001
FL205
Q002
REC C(LINE).PB C
REC+(PAL+EDIT+NON CORR)
CAM REC+WCCD PB
CAM REC+CORRE OFF
REC Y+C(LINE)
REC C(CAM)
PB C
FSC
PLL
1H DELAY
CAM/EEC
IC204
JOG CHROMA PROCESS
Q357
JOG SWITCH
TH/DL
Q130,131
Q352
BUFFER
PB CHROMA
FL303
4.43MHz BPF
Q353,354
Q306
ACK DETECT
COLOR
SEQUENCE DET
FREQUENCY CONVERTER
TH CHROMA
DL CHROMA
SWD 1
1/2 FH
IC207
PB TITLE MIX,CAMERA/LINE SW
CAM
LINE
Q307
PB/EE C+ACK DC
B/W
PHASE SHIFT
-90° SHIFT
X2
2FSC
AFC DET
QUAIS BURST
RV353
RV351
APC LPF
Q304
DC BIAS
VOB2/Y BLK
CAM/LINE
TITLE C
1/2 FH MP
FH VCO
AFC ID
HALF H KILLER
Q356
BF GENERATOR
MODE
PB
JOG
DOP
Q351
Q362

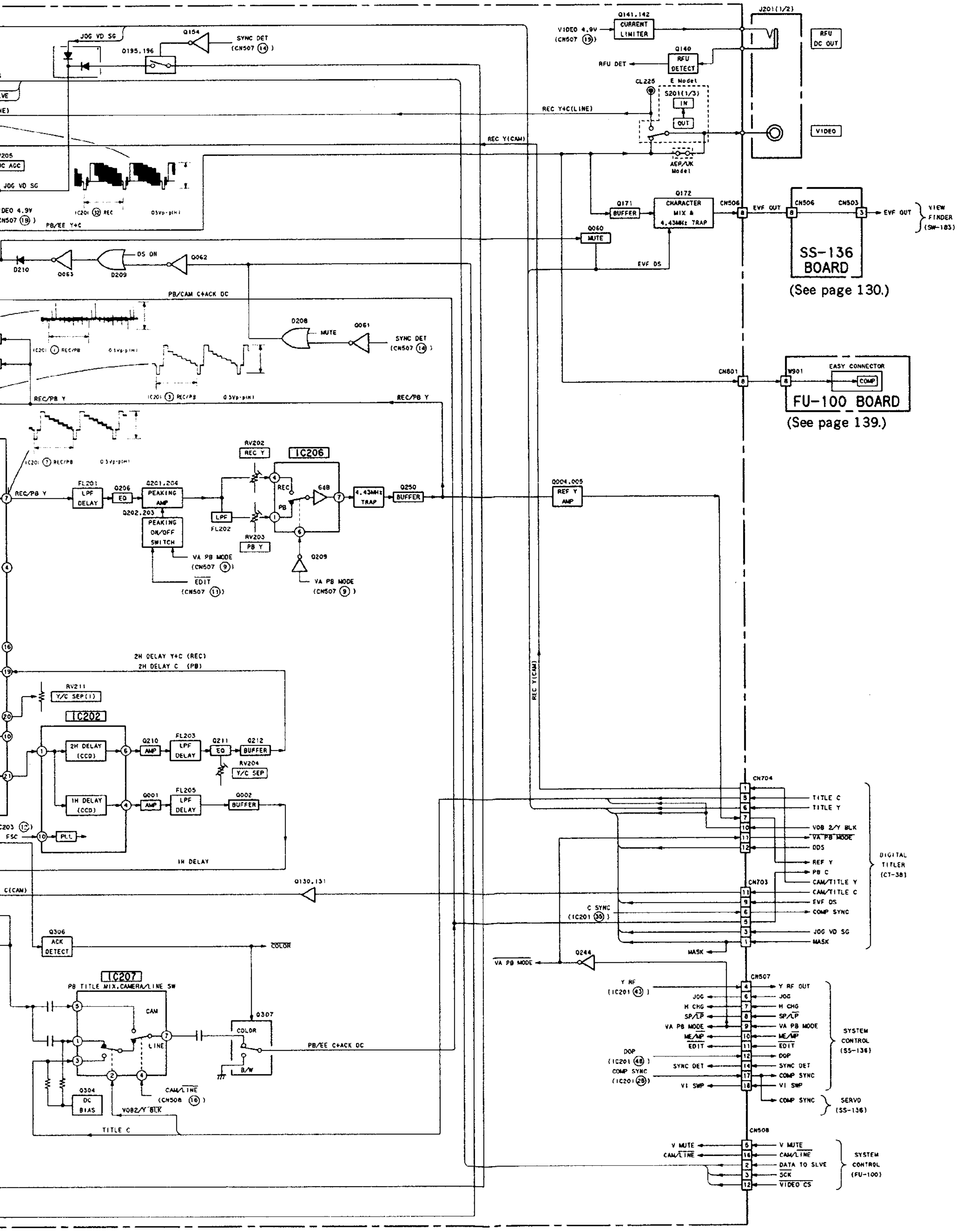

SS-136 BOARD
(See page 130.)
FU-100 BOARD
(See page 139.)
IC206
IC202
IC207
DIGITAL TITLER (CT-38)
SYSTEM CONTROL (SS-136)
SERVO (SS-136)
SYSTEM CONTROL (FU-100)
VIEW FINDER (SW-183)

3-8. VIDEO (2) BLOCK DIAGRAM

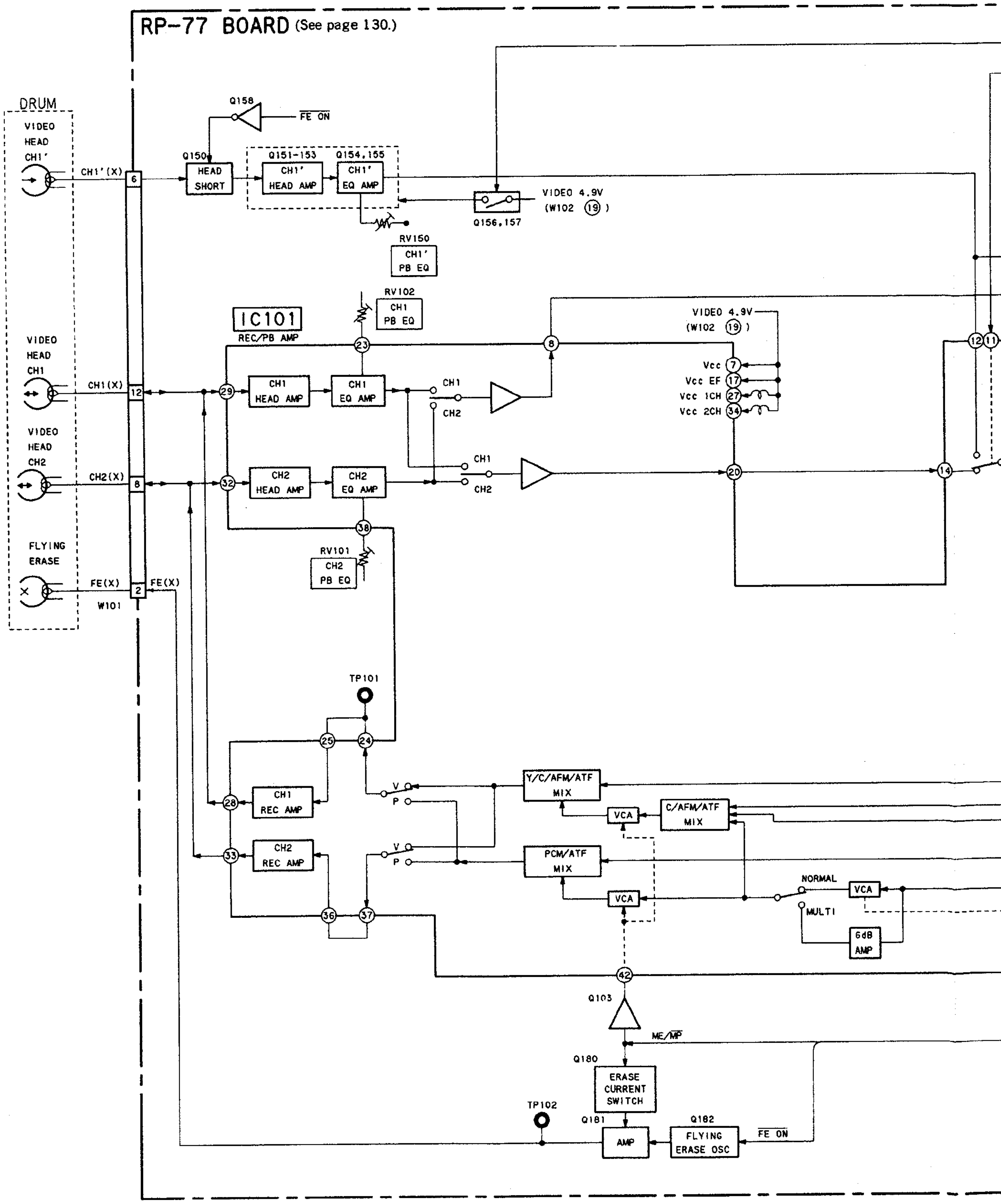

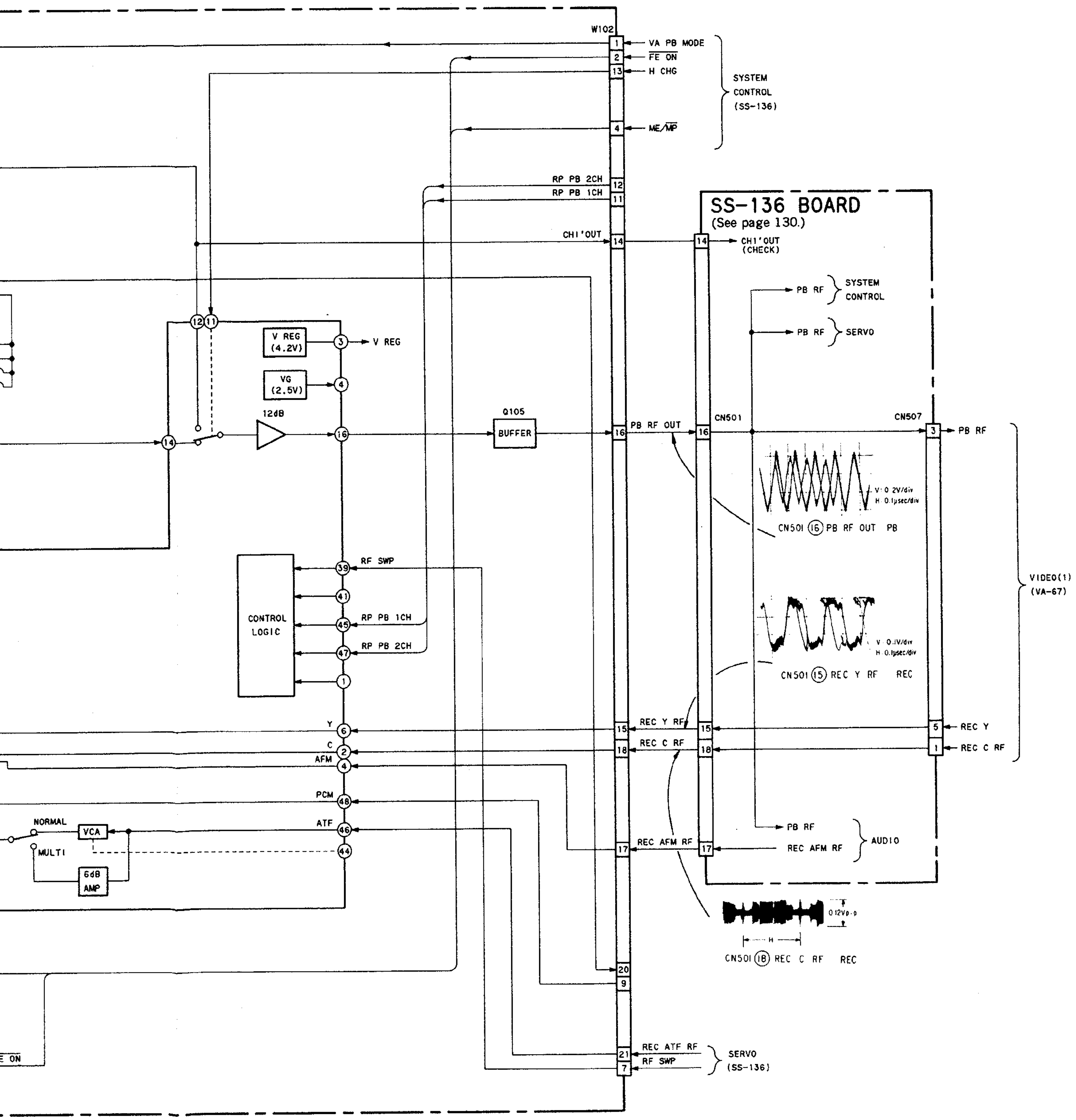

W102
VA PB MODE
FE ON
H CHG
ME/MP
SYSTEM CONTROL (SS-136)
RP PB 2CH
RP PB 1CH
CH1'OUT
SS-136 BOARD
(See page 130.)
CH1'OUT (CHECK)
PB RF
SYSTEM CONTROL
PB RF
SERVO
V REG (4.2V)
V REG
VG (2.5V)
12dB
Q105
BUFFER
PB RF OUT
CN501
CN507
PB RF
CN501 (16) PB RF OUT PB
RF SWP
CONTROL LOGIC
RP PB 1CH
RP PB 2CH
VIDEO(1) (VA-67)
CN501 (15) REC Y RF REC
Y
C
AFM
REC Y RF
REC C RF
REC Y
REC C RF
PCM
ATF
NORMAL
VCA
MULTI
6dB AMP
REC AFM RF
PB RF
REC AFM RF
AUDIO
CN501 (18) REC C RF REC
REC ATF RF
RF SWP
SERVO (SS-136)

3-9. SERVO BLOCK DIAGRAM

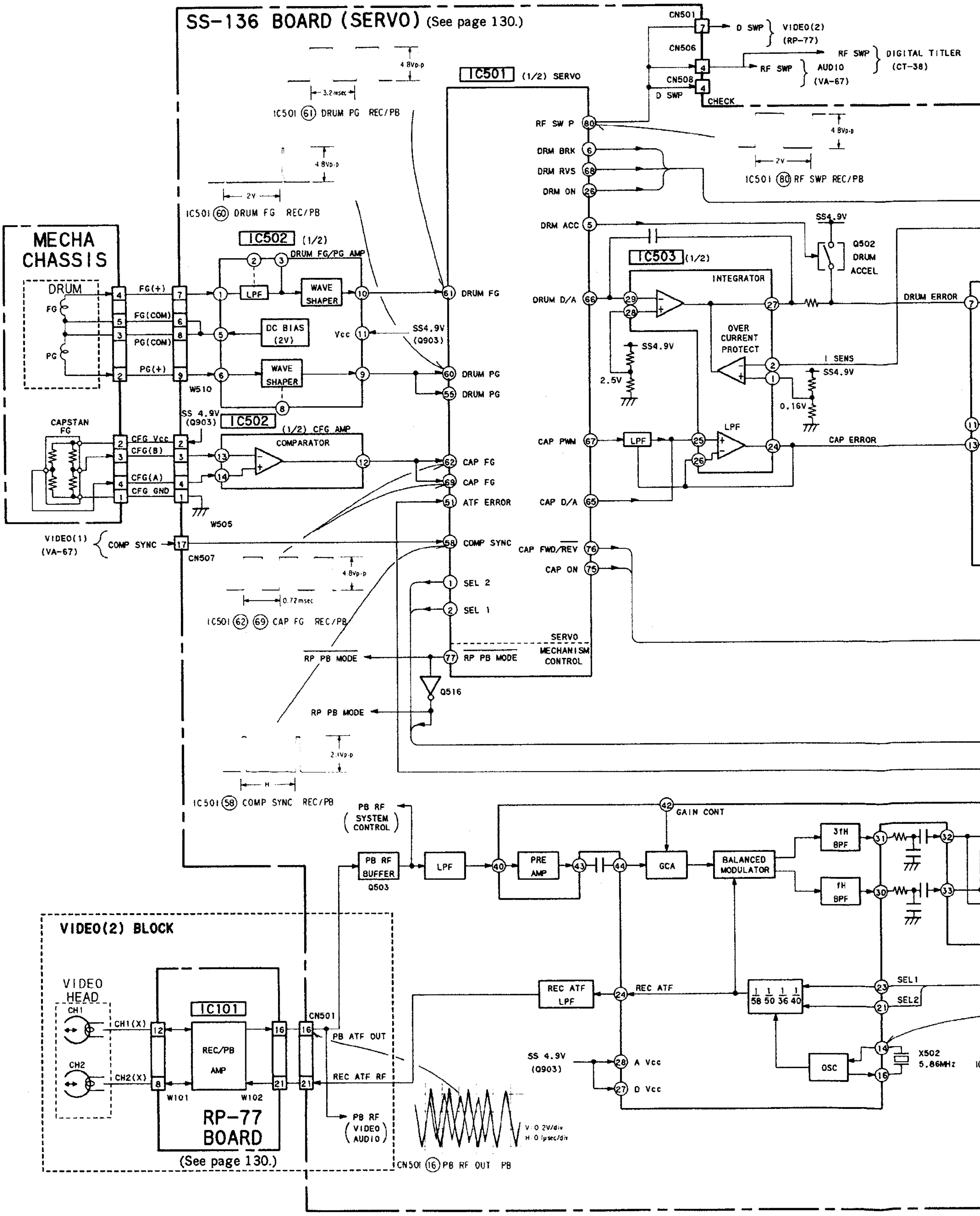

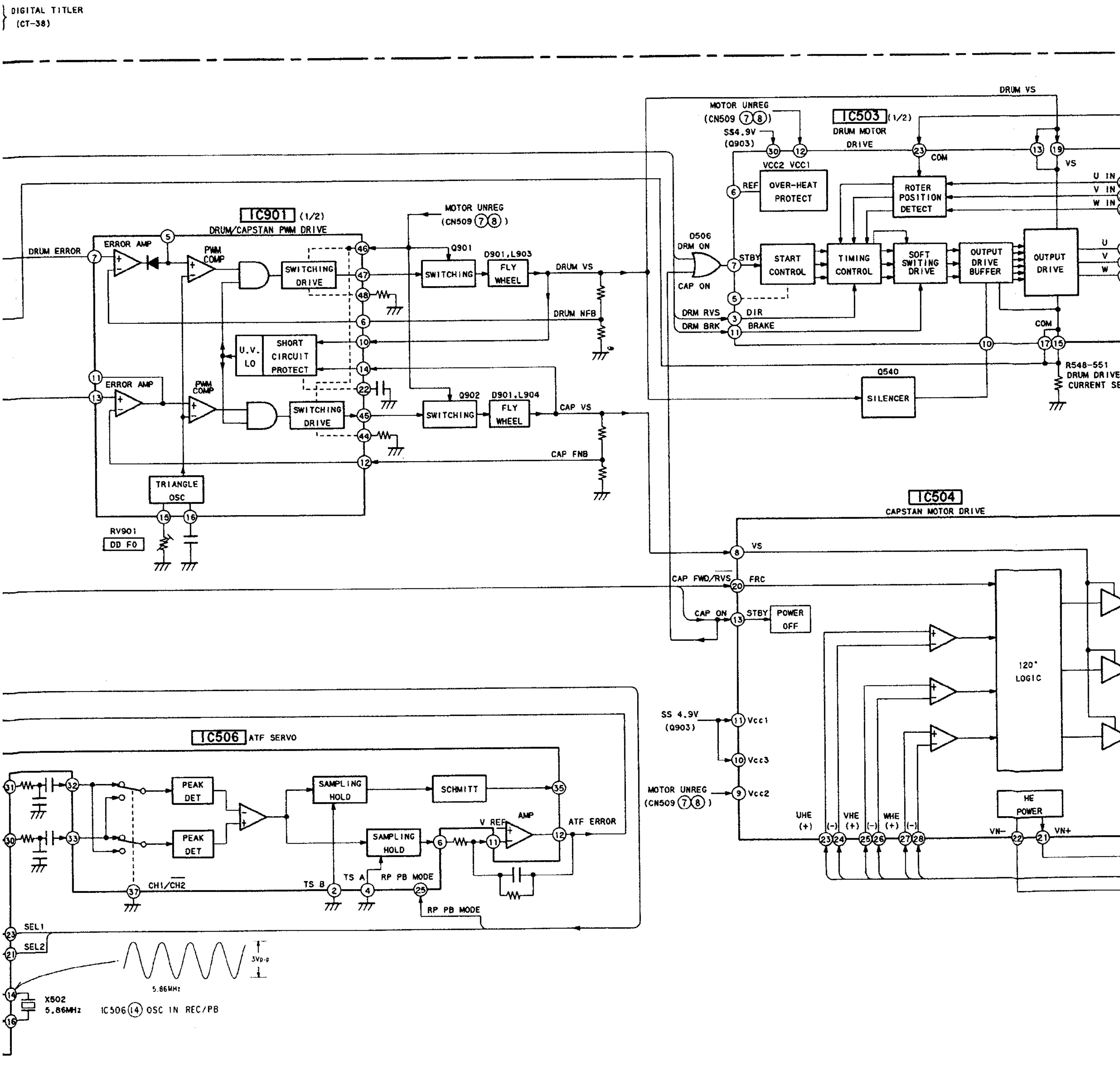

DIGITAL TITLER (CT-38)
IC901 (1/2) DRUM/CAPSTAN PWM DRIVE
DRUM ERROR
ERROR AMP
PWM COMP
SWITCHING DRIVE
U.V. LO
SHORT CIRCUIT PROTECT
TRIANGLE OSC
RV901 DD FO
MOTOR UNREG (CN509 7 8)
Q901
SWITCHING
D901, L903
FLY WHEEL
DRUM VS
DRUM NFB
Q902
D901, L904
CAP VS
CAP FNB
IC503 (1/2) DRUM MOTOR DRIVE
SS4.9V (Q903)
VCC2 VCC1
OVER-HEAT PROTECT
REF
ROTER POSITION DETECT
COM
VS
U IN
V IN
W IN
D506
DRM ON
CAP ON
STBY
START CONTROL
TIMING CONTROL
SOFT SWITING DRIVE
OUTPUT DRIVE BUFFER
OUTPUT DRIVE
DRM RVS
DRM BRK
DIR
BRAKE
Q540
SILENCER
R548-551 DRUM DRIVE CURRENT SE
IC504 CAPSTAN MOTOR DRIVE
CAP FWD/RVS
FRC
POWER OFF
120° LOGIC
SS 4.9V (Q903)
Vcc1
Vcc3
Vcc2
HE POWER
UHE (+) (-)
VHE (+) (-)
WHE (+) (-)
VN-
VN+
IC506 ATF SERVO
PEAK DET
SAMPLING HOLD
SCHMITT
V REF
AMP
ATF ERROR
CH1/CH2
TS B
TS A
RP PB MODE
SEL1
SEL2
3Vp-p
5.86MHz
X502 5.86MHz
IC506 (14) OSC IN REC/PB

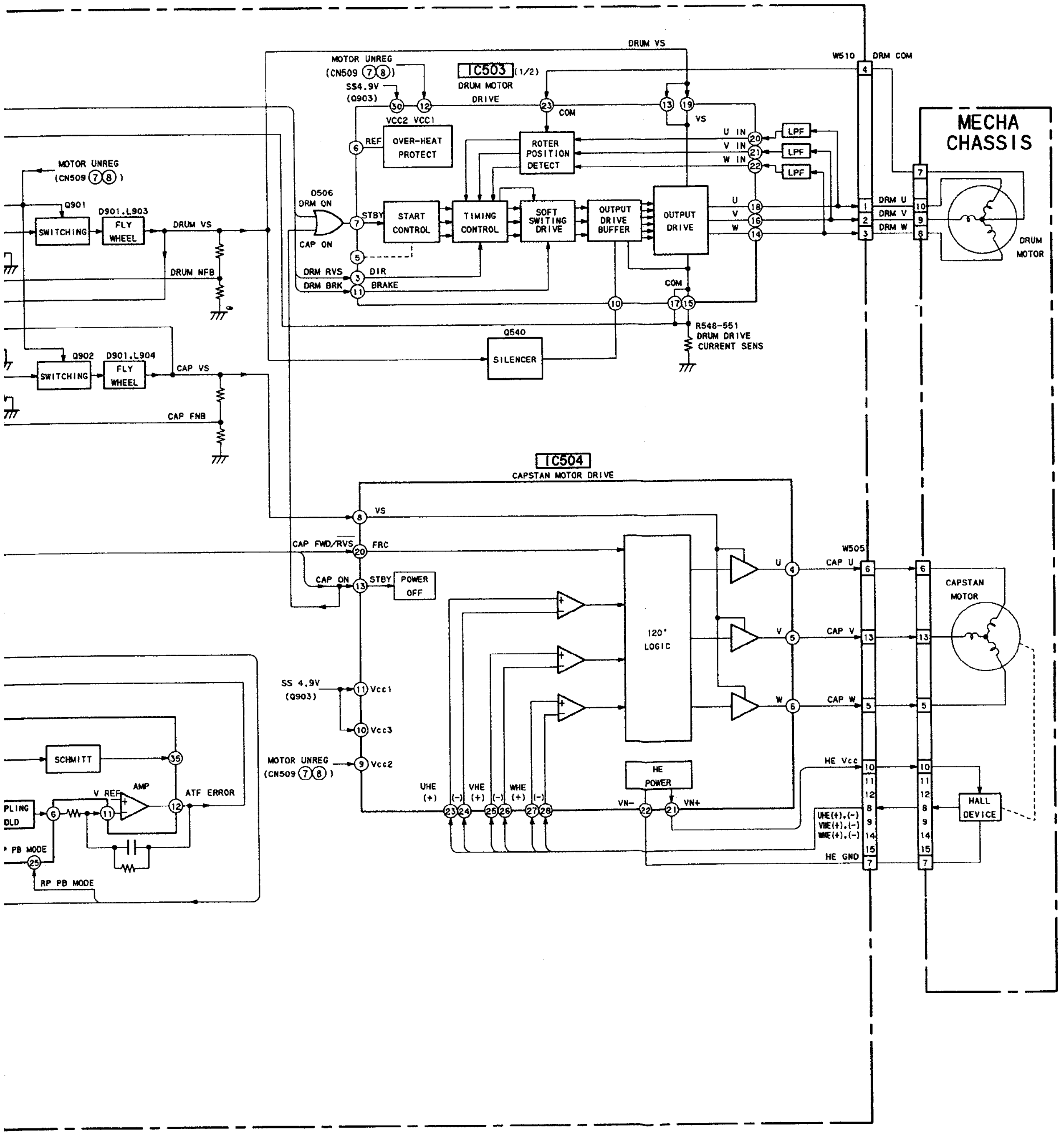

DRUM VS
MOTOR UNREG
(CN509 7 8)
IC503 (1/2)
DRUM MOTOR
DRIVE
SS4.9V
(Q903)
W510
DRM COM
MECHA
CHASSIS
COM
VS
VCC2 VCC1
REF
OVER-HEAT
PROTECT
ROTER
POSITION
DETECT
U IN
V IN
W IN
LPF
D506
DRM ON
CAP ON
STBY
START
CONTROL
TIMING
CONTROL
SOFT
SWITING
DRIVE
OUTPUT
DRIVE
BUFFER
OUTPUT
DRIVE
DRM U
DRM V
DRM W
DRUM
MOTOR
Q901
D901,L903
SWITCHING
FLY
WHEEL
DRUM NFB
DRM RVS
DRM BRK
DIR
BRAKE
R548-551
DRUM DRIVE
CURRENT SENS
Q540
SILENCER
Q902
D901,L904
CAP VS
CAP FNB
IC504
CAPSTAN MOTOR DRIVE
CAP FWD/RVS
FRC
W505
CAP U
CAP V
CAP W
CAPSTAN
MOTOR
POWER
OFF
120° LOGIC
SS 4.9V
(Q903)
Vcc1
Vcc3
Vcc2
HE Vcc
HE
POWER
HALL
DEVICE
UHE (+)
VHE (+)
WHE (+)
VN-
VN+
UHE(+),(-)
VHE(+),(-)
WHE(+),(-)
HE GND
SCHMITT
AMP
V REF
ATF ERROR
PLING
OLD
PB MODE
RP PB MODE

3-10. SYSTEM CONTROL BLOCK DIAGRAM

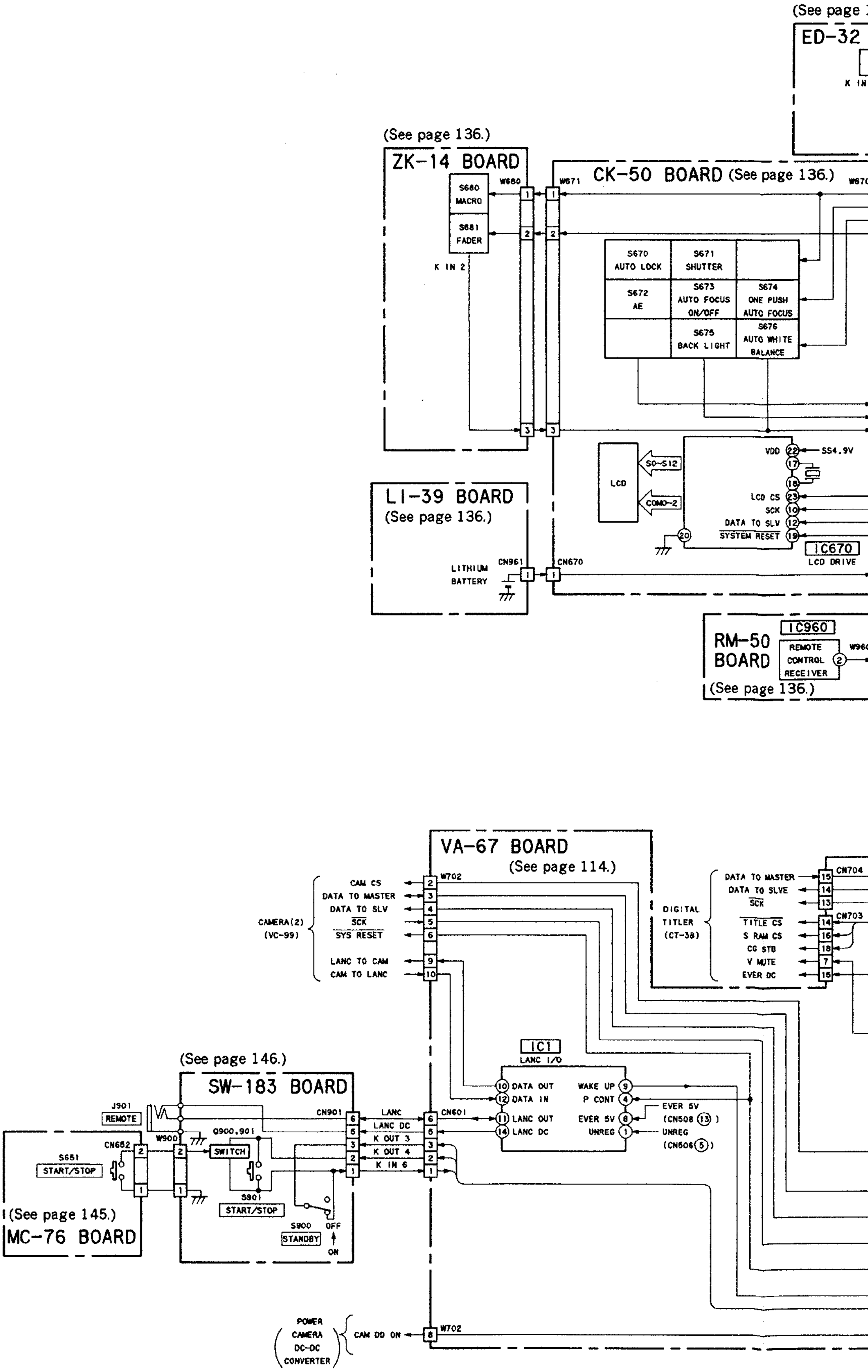

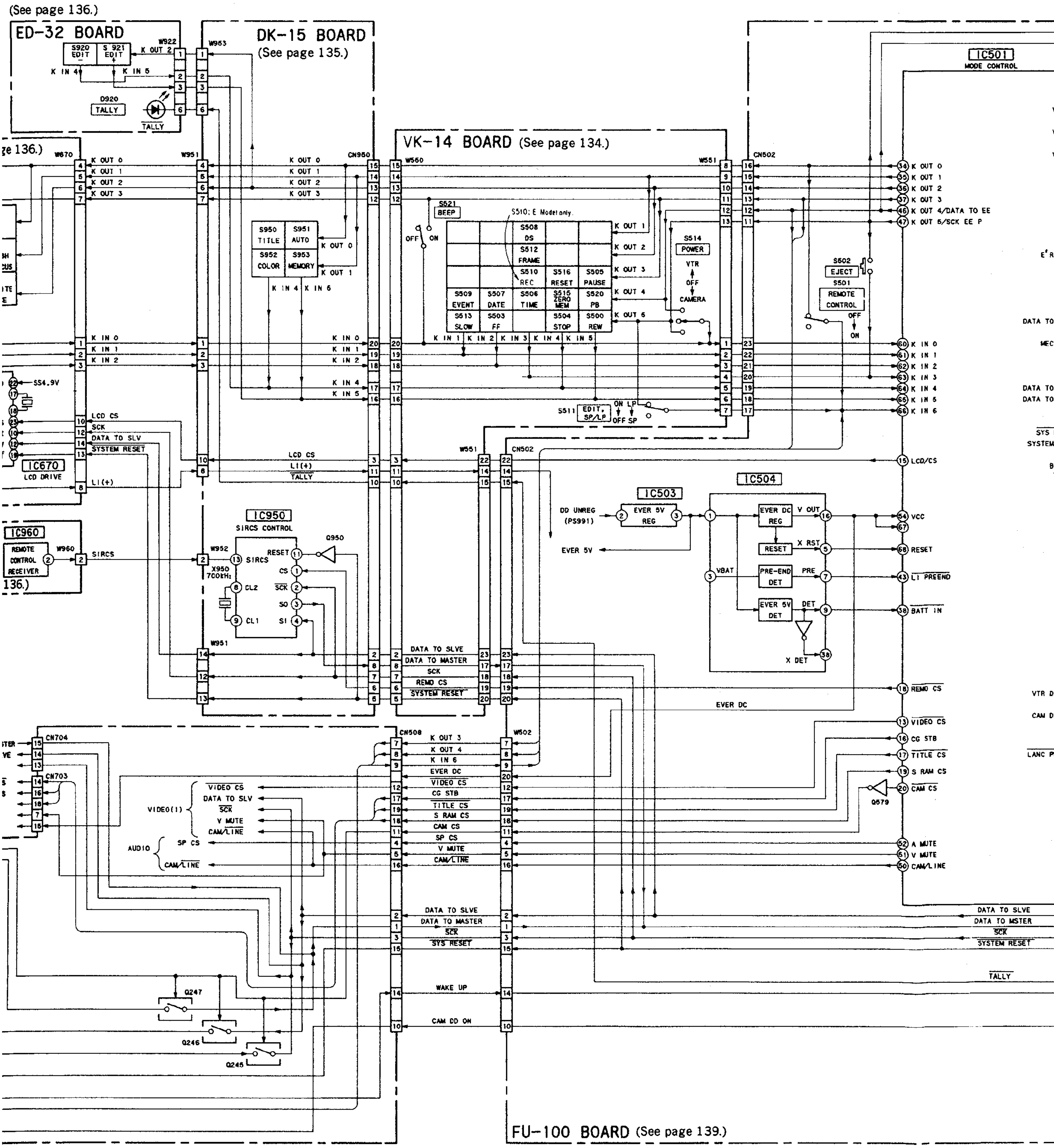

(See page 136.)
ED-32 BOARD
DK-15 BOARD
(See page 135.)
VK-14 BOARD (See page 134.)
IC501
MODE CONTROL
IC670
LCD DRIVE
IC960
REMOTE CONTROL RECEIVER
IC950
SIRCS CONTROL
IC503
EVER 5V REG
IC504
S950 TITLE
S951 AUTO
S952 COLOR
S953 MEMORY
S521 BEEP
S514 POWER
S502 EJECT
S501 REMOTE CONTROL
S511 EDIT, SP/LP
S510: E Model only.
K OUT 0
K OUT 1
K OUT 2
K OUT 3
K OUT 4/DATA TO EE
K OUT 5/SCK EE P
K IN 0
K IN 1
K IN 2
K IN 3
K IN 4
K IN 5
K IN 6
LCD CS
SCK
DATA TO SLV
SYSTEM RESET
LI(+)
TALLY
SIRCS
LCD/CS
VCC
RESET
LI PREEND
BATT IN
REMO CS
VIDEO CS
CG STB
TITLE CS
S RAM CS
CAM CS
A MUTE
V MUTE
CAM/LINE
DATA TO SLVE
DATA TO MASTER
SYSTEM RESET
EVER DC
WAKE UP
CAM DD ON
FU-100 BOARD (See page 139.)

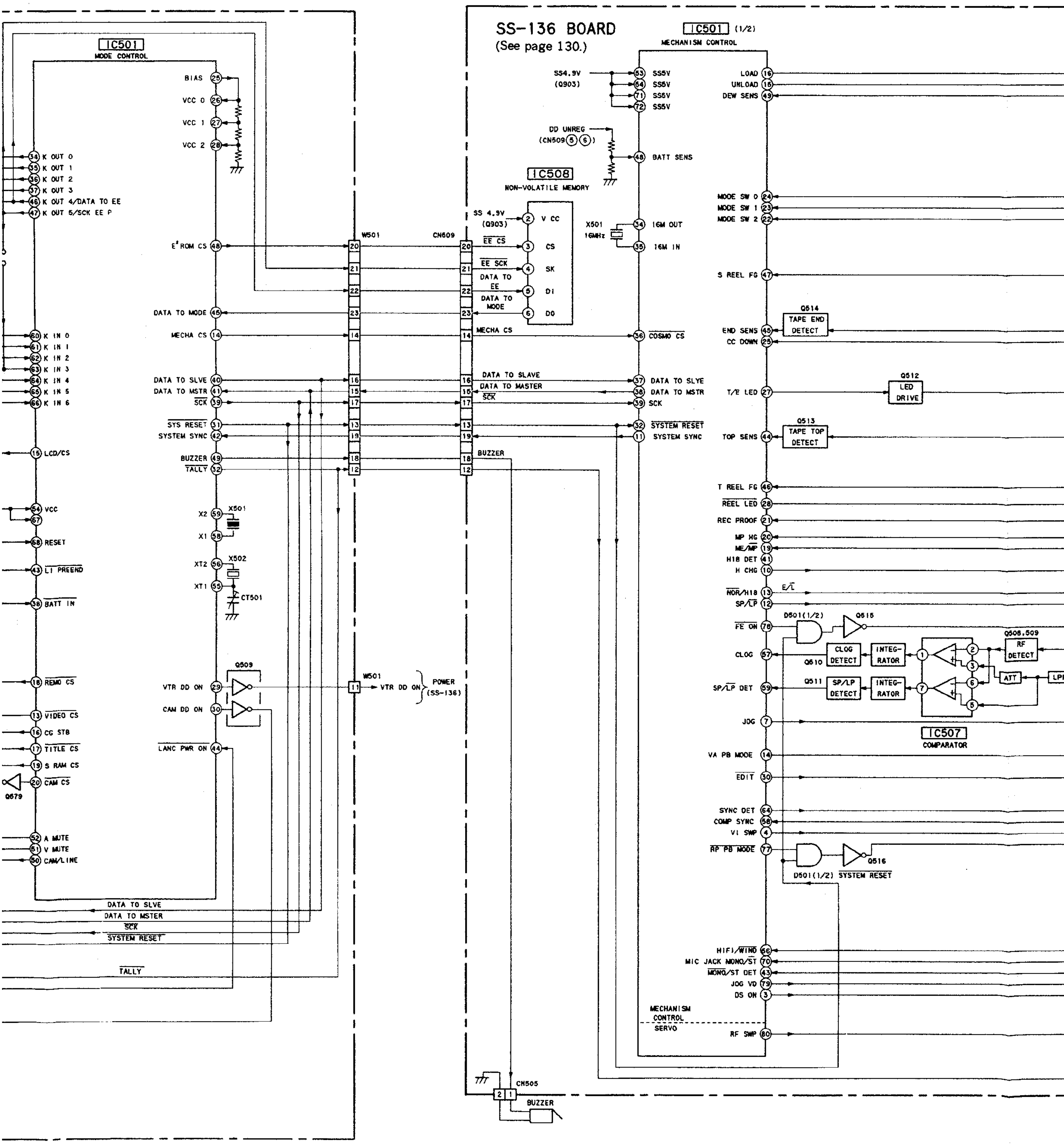

IC501
MODE CONTROL
BIAS
VCC 0
VCC 1
VCC 2
K OUT 0
K OUT 1
K OUT 2
K OUT 3
K OUT 4/DATA TO EE
K OUT 5/SCK EE P
E²ROM CS
DATA TO MODE
MECHA CS
K IN 0
K IN 1
K IN 2
K IN 3
K IN 4
K IN 5
K IN 6
DATA TO SLVE
DATA TO MSTR
SCK
SYS RESET
SYSTEM SYNC
LCD/CS
BUZZER
TALLY
VCC
RESET
LI PREEND
BATT IN
X2
X1
X501
XT2
XT1
X502
CT501
REMO CS
Q509
VTR DD ON
CAM DD ON
VIDEO CS
CG STB
TITLE CS
LANC PWR ON
S RAM CS
CAM CS
Q679
A MUTE
V MUTE
CAM/LINE
DATA TO SLVE
DATA TO MSTER
SCK
SYSTEM RESET
TALLY
W501
CN609
VTR DD ON
POWER (SS-136)
SS-136 BOARD
(See page 130.)
IC501 (1/2)
MECHANISM CONTROL
SS4.9V (Q903)
SS5V
DD UNREG (CN509 5 6)
BATT SENS
IC508
NON-VOLATILE MEMORY
SS 4.9V (Q903)
V CC
EE CS
CS
EE SCK
SK
DATA TO EE
DI
DATA TO MODE
DO
X501 16MHz
16M OUT
16M IN
MECHA CS
COSMO CS
DATA TO SLAVE
DATA TO MASTER
SCK
DATA TO SLVE
DATA TO MSTR
SYSTEM RESET
SYSTEM SYNC
BUZZER
LOAD
UNLOAD
DEW SENS
MODE SW 0
MODE SW 1
MODE SW 2
S REEL FG
Q514
TAPE END DETECT
END SENS
CC DOWN
Q512
LED DRIVE
T/E LED
Q513
TAPE TOP DETECT
TOP SENS
T REEL FG
REEL LED
REC PROOF
MP HG
ME/MP
H18 DET
H CHG
NOR/H18
E/L
SP/LP
D501(1/2)
Q515
FE ON
Q508,509
RF DETECT
CLOG
CLOG DETECT
Q510
INTEG-RATOR
ATT
LPF
Q511
SP/LP DET
SP/LP DETECT
JOG
IC507
COMPARATOR
VA PB MODE
EDIT
SYNC DET
COMP SYNC
VI SWP
RF PB MODE
Q516
D501(1/2)
SYSTEM RESET
HIFI/WIND
MIC JACK MONO/ST
MONO/ST DET
JOG VD
DS ON
MECHANISM CONTROL
SERVO
RF SWP
CN505
BUZZER

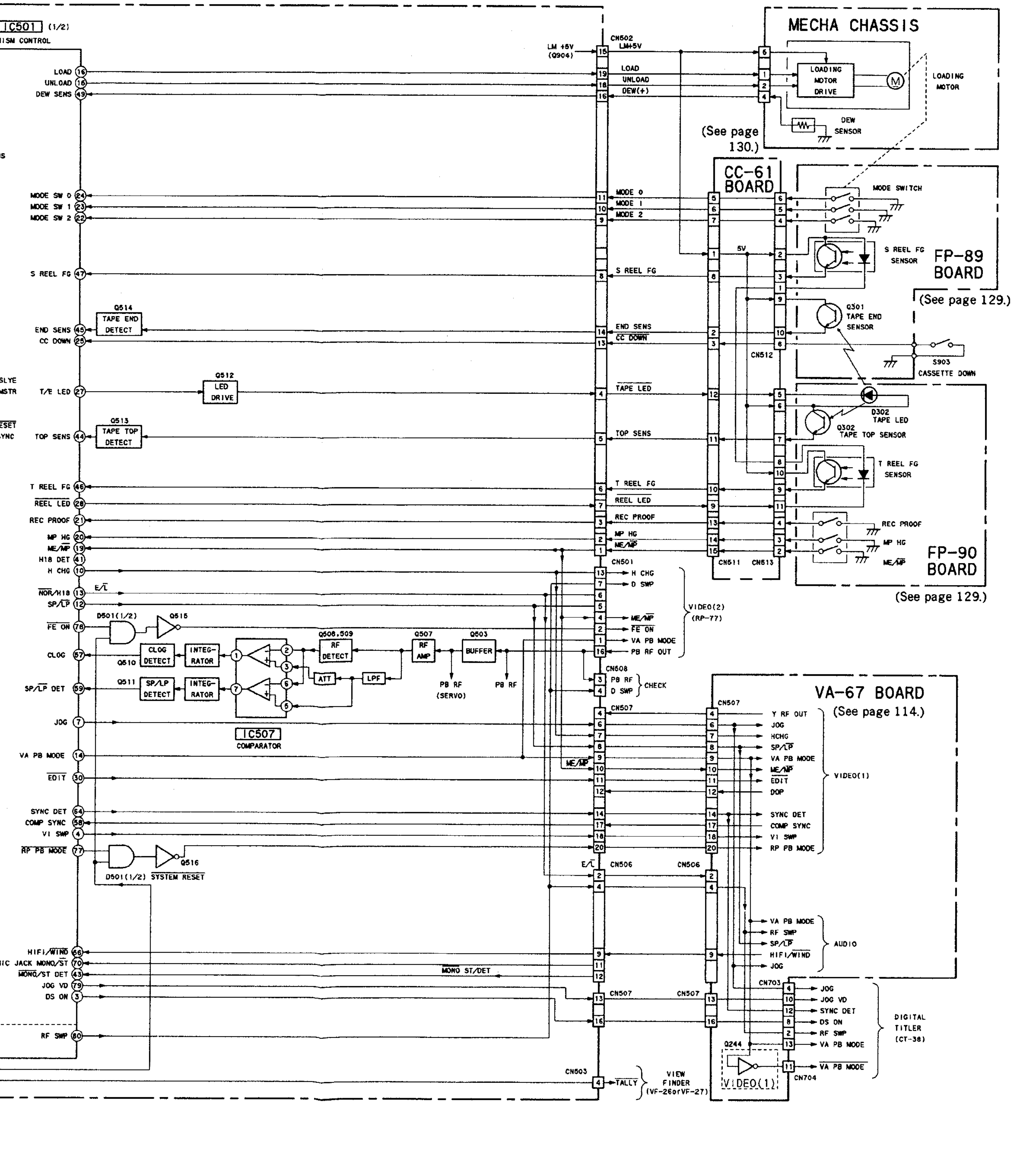
IC501 (1/2)
MECHA CHASSIS
LOADING MOTOR DRIVE
LOADING MOTOR
DEW SENSOR
(See page 130.)
CC-61 BOARD
MODE SWITCH
S REEL FG SENSOR
FP-89 BOARD
(See page 129.)
Q301 TAPE END SENSOR
S903 CASSETTE DOWN
D302 TAPE LED
Q302 TAPE TOP SENSOR
T REEL FG SENSOR
REC PROOF
MP HG
ME/MP
FP-90 BOARD
(See page 129.)
CN502
LM +5V (Q904)
LOAD
UNLOAD
DEW SENS
MODE SW 0
MODE SW 1
MODE SW 2
S REEL FG
Q514 TAPE END DETECT
END SENS
CC DOWN
Q512 LED DRIVE
T/E LED
TAPE LED
Q513 TAPE TOP DETECT
TOP SENS
T REEL FG
REEL LED
REC PROOF
MP HG
ME/MP
H18 DET
H CHG
NOR/H18
SP/LP
FE ON
D501(1/2)
Q515
CLOG
Q510 CLOG DETECT
INTEG-RATOR
SP/LP DET
Q511 SP/LP DETECT
Q508,509 RF DETECT
ATT
LPF
Q507 RF AMP
Q503 BUFFER
PB RF (SERVO)
PB RF
IC507 COMPARATOR
CN501
D SWP
VA PB MODE
PB RF OUT
VIDEO(2) (RP-77)
CN508
CHECK
JOG
EDIT
SYNC DET
COMP SYNC
V1 SWP
RP PB MODE
Q516
D501(1/2) SYSTEM RESET
E/L
CN506
HIFI/WIND
MIC JACK MONO/ST
MONO/ST DET
JOG VD
DS ON
RF SWP
CN503
TALLY
VIEW FINDER (VF-26orVF-27)
VA-67 BOARD
(See page 114.)
CN507
Y RF OUT
HCHG
DOP
VIDEO(1)
AUDIO
CN703
CN704
Q244
DIGITAL TITLER (CT-38)
CN511
CN512
CN513

3-11. SERVO, SYSTEM CONTROL SYSTEM TERMINAL FUNCTION SS-136 BOARD IC501 (CXP-80116)

PIN No.	Signal Name	I/O	Function	Connection
1	SEL2	O	ATF REF PILOT signal frequency control ATF REF PILOT f_1 f_2 f_3 f_4 SEL 1 H L H L SEL 2 H H L L	ATF IC CXA1204Q
2	SEL1	O		
3	DS ON	O	Data Screen ON/OFF control Data Screen On and Data Screen key are selected with “H”	VIDEO block
4	VI SWP	O	RF SWP using for Vidoe system Normally, same as RF SWP. When using ’CH only “H” 3Head is used.	VIDEO block
5	DRM ACC	O	DRUM motor acceleration signal Acceleration is selected with “H”	To Drum motor driver CXA8006M
6	DRM BLK	O	DRUM motor brake signal Brake is selected with “H”	To Drum motor driver CXA8006M
7	JOG	O	Normal/JOG mode recognition signal JOG is selected with “H”	R/P Amp VIDEO block
8	FE RA	—	Not used	——
9	FE RS	—		
10	H CHG	O	2CH or ’CH select signal ’CH is selected with “H” Only 3Head is used	VIDEO system R/P Amp
11	SYSTEM SYNC	O	Internal bus communication synchronizing signal (V synchronization)	Mode controller
12	SP/$\overline{\text{LP}}$	O	SP/LP mode recognition signal SP mode is selected with “H”	R/P Amp VIDEO/AUDIO block
13	$\overline{\text{NOR}}$/Hi8	O	Not used Normally, “L”	——
14	VA PB MODE	O	VIDEO/AUDIO system REC/PB mode select PB mode is selected with “H”	VIDEO/AUDIO block
15	UNLOAD	O	Loading motor control signal OFF LOADING UNLOADING BRAKE LOAD L H L H UNLOAD L L H H	To loading motor
16	LOAD	O		
17	CAP ON2	—	Not used	——
18	AF REC	—	Not used	——
19	ME/$\overline{\text{MP}}$	I	ME/MP tape recognition input ME tape is selected with “H”	To CC board
20	MP HG	I	MP HG tape recognition input MPHG is selected with “L”	To CC board
21	REC PROOF	I	REC PROOF recognition input REC PROOF is selected with “L”	To CC board
22	MODE SW2	I	Mechanical position input	To CC board
23	MODE SW1	I		
24	MODE SW0	I		
25	$\overline{\text{CC DOWN}}$	I	Cassette IN switch input Cassette IN is selected with “L”	To CC board
26	DRM ON	O	Drum motor drive control Motor Drive is selected with “H”	To Drum motor driver CXA8006M
27	T/E LED	O	LED for tape top end sensor drive control LED Flashing is selected with “H”	To CC board
28	$\overline{\text{REEL LED}}$	O	LED for reel sensor drive control LED Flashing is selected with “L”	To CC board

PIN No.	Signal Name	I/O	Function	Connection
29		—	Not used	——
30	$\overline{\text{EDIT}}$	O	EDIT ON/OFF control EDIT is selected with "L"and interlocked with EDIT key.	To VIDEO block
31	SS GND	—	—	——
32	$\overline{\text{SYSTEM}}$ $\overline{\text{RESET}}$	I	Control by mode controller with RESET terminal of this microcomputer RESET is selected "L"	Mode controller and others
33	SS GND	—	—	——
34	16M OUT	O	Crystal connecting terminal for system clock oscillation (16 MHz)	X'tal (X501)
35	16M IN	I		
36	$\overline{\text{COSMO CS}}$	I	Select signal of this microcomputer from internal bus communication mode controller Selected with "L"	Mode controller
37	DATA TO SLVE	I	Serial data input terminal	Mode controller
38	DATA TO MSTR	O	Serial data output terminal	Mode controller
39	$\overline{\text{SCK}}$	I	Serial clock input terminal	Mode controller
40	PCM ACT	—	Not used	——
41	Hi8 DET	—	Not used Normally, "L"	——
42	S IN	—	Not used Normally, "H"	——
43	$\overline{\text{MONO}}$/ST DET	I	AFM monaural/stereo recognition input Stereo is selected "H" (Only stereo correspondence model)	To AUDIO block
44	TOP SENS	I	Tape top end sensor input TOP is selected with "H"	To CC board
45	END SENS	I	END is selected with "H"	
46	T REEL FG	I	Reel sensor input Take up side	To CC board
47	S REEL FG	I	Reel sensor input Supply side	
48	BATT SENS	I	Battery input voltage sense	——
49	DEW SENS	I	DEW SENSOR input	DEW SENSOR
50	THERMISTOR	I	THERMISTOR input (This model : fixed value)	
51	ATF ERROR	I	ATF errer (ATF LOCK error) input, A/D input terminal	IC506⑫
52	SS GND	—	—	——
53 54	SS 4.9V		Power source supply terminal	
55	DRM PG	I	DRUM PG input, FRC (high precision timer) capture input terminal	IC502 ⑨
56	$\overline{\text{HiFi}}$/WIND	I	MIC HiFi/WIND input. HiFi is selected with "L", WIND is selected with "H"	To AUDIO block
57	CLOG	I	Clog detection signal input. CLOG is selected with "H"	Q510 ©
58	COMP SYNC	I	Composite trunk (composite synchronizing signal) input. (built-inV SYNC separator)	To VIDEO block
59	SP/$\overline{\text{LP}}$ DET	I	SP/LP recognition signal input	Q511 ©

PIN No.	Signal Name	I/O	Function	Connection
60	DRM PG	—	—	—
61	DRM FG	I	DRUM FG input terminal, FRC capture input terminal	IC502 ⑩ Sense Amplifier
62	CAP FG	I	CAPSTAN FG input terminal, FRC capture input terminal	IC502⑫ Sense amplifier
63	MONO/$\overline{\text{ST}}$	—	Not used	—
64	SYNC DET	I	With/Without VIDEO signal recognition signal input	To VIDEO block
65	CAP D/A	O	DA gate pulse output terminal for CAP ERROR output, Servo exclusive output terminal (DA mode)	To capstan lowpass filter
66	DRM D/A	O	DA gate pulse output terminal for DRUM ERROR output, Servo exclusive output terminal (DA mode)	To drum lowpass filter
67	CAP PWM	O	PWM output terminal for CAP ERROR output, Servo excluseive output terminal (PWM mode)	Capstan driver IC503
68	DRM RVS	O	DRUM rotating direction control signal RVS is selected with "H" FWD is selected with "L"	IC503 ③
69	CAP FG	I	External event input terminal to CAP FG input terminal exclusive counter for TAPE COUNTER drive	IC502⑫ sense amplifier
70	MIC JACK MONO/$\overline{\text{ST}}$	I	External MIC Monaural/stereo recognition signal. Monaural is selected with "H"	To AUDIO block
71 72	SS 4.9V			
73	SS GND	—	—	—
74	—	—	Not used	—
75	CAP ON	O	Capstan driver ON control signal	IC504⑬ Capstan driver
76	CAP FWD/$\overline{\text{REV}}$	O	Capstan rotaing direction control signal, FWD is selected with "H", RVS is selected with "L"	IC504⑳ Capstan driver
77	$\overline{\text{RP PB MODE}}$	O	REC/PB mode select signal of RP amplifier and ATF IC	Q516 Ⓑ
78	FE ON	O	Flying erase oscillatio ON/OFF signal. Oscillation is selected with "H"	To RP AMP.
79	JOG VD	O	Artificial VD output terminal input to VIDEO signal in varying speed playback	To VIDEO block
80	RF SWP	O	RF SWP output temrinal	RP block VIDEO/AUDIO block

3-12. MODE CONTROL SYSTEM IC TERMINAL FUNCTION DESCRIPTION FU-100 BOARD IC501 (μPD75316)

PIN No.	Port Name	Function	I/O	Connection	Signal Name
1	S12	Segment signal output	O		
2	S13	Output (Four value output of 0, 1.7, 3.3, 5V)	O		
3	S14	Output (Four value output of 0, 1.7, 3.3, 5V)	O		
4	S15	Output (Four value output of 0, 1.7, 3.3, 5V)	O		
5	S16	Output (Four value output of 0, 1.7, 3.3, 5V) — Segment terminal drive	O		
6	S17	Output (Four value output of 0, 1.7, 3.3, 5V) — to LCD. Not used.	O		
7	S18	Output (Four value output of 0, 1.7, 3.3, 5V)	O		
8	S19	Output (Four value output of 0, 1.7, 3.3, 5V)	O		
9	S20	Not used	O		
10	S21	Not used	O		
11	S22	Not used	O		
12	S23	Not used	O		
13	S24/BP0	Chip select signal to video IC (CXA1207) 1V period "L" pulse	O	VA	$\overline{\text{VIDEO CS}}$
14	S25/BP1	Chip select signal to SS board IC501 (CXP80116) 1V period "L" pulse	O	SS IC501	$\overline{\text{MECHA CS}}$
15	S26/BP2	Chip select signal to LCD driver (M34206) 1V period "L" pulse	O	CK	$\overline{\text{LCD CS}}$
16	S27/BP3	Strobe signal for character generator (μPD6451) 1V "H" pulse train.	O	VA	CG STB
17	S28/BP4	Chip select to titler (CF79028) 1V "L" pulse	O		$\overline{\text{TITLE CS}}$
18	S29/BP5	Chip select to sercs remote control (μPD7564) 1V "L" pulse	O	DK	$\overline{\text{REMO CS}}$ REMOTE CONTROL
19	S30/BP6	Chip select to SRAM "H" when using title, Normally, "L"	O		S RAM CS
20	S31/BP7	Chip select to camera μCOM 1V period "H" pulse	O	CAMERA	CAM CS
21	COM0	LCD to common signal output	O		
22	COM1	Common terminal drive output	O		
23	COM2	Not used.	O		
24	COM3		O		
25	BIAS	Output terminal for outside dividing resistance cut, Power input. Not used.	O		
26	VLC0	Power source 0 input terminal	I		
27	VLC1	Power source for LCD drive, 3V in backup — Power source 1 input terminal	I		
28	VLC2	Not used. — Power source 2 input terminal	I		
29	P40	SS 5V,VTR 5V power source detection, "H" when VTR power source is turned on.	O	VA	VTR DD ON
30	P41	CAM 5V power source detection	O	CAMERA	$\overline{\text{CAM DD ON}}$
31	P42	Output port to reset each IC when power is turned on.	O	all	$\overline{\text{SYS RESET}}$
32	P43	External tally and internal tally drive port	O	VA and DK	$\overline{\text{TALLY}}$
33	V_{ss}	GND			V_{ss}
34	P50	L active KEY matrix output port	O	all	K OUT0
35	P51		O	all	K OUT1
36	P52		O	all	K OUT2
37	P53		O	all	K OUT3
38	P00/INT4	Clock select to 32K with "L" and to 4.19M with "H" when Battery is turned on, "L" is select.	I	FU	$\overline{\text{BATT IN}}$

PIN No.	Port Name	Function	I/O	Connection	Signal name
39	P01/$\overline{SCK}$	Serial clock input-output terminal, Serial clock (2μS) communication	O	all	$\overline{SCK}$
40	P02/SO/SB0	Serial clock input-output terminal, Serial clock (2μS) communication	O	all	DATA TO SLVE
41	P03/SI/SB1	Serial bus input terminal, Serial clock (2μS) communication	I	all	DATA TO MASTR
42	P10/INT0	(Edge detection vector interruption), System synchronization input port from CXD80116	I	SS IC501	SYSTEM SYNC
43	P11/INT1	(Edge detection vector interruption), Lithium PRE END is selected wiht "L"	I	FU	$\overline{\text{LI PRE END}}$
44	P12/INT2	STABY release input, Release wiht "L" , STA	I	VA	$\overline{\text{LANC PWR ON}}$
45	P13/TIO	E^2PROM serial communication data input, EE PROM communiaction KEY matrix OUT is combined.	I	SS IC508	DATA TO MODE
46	P20/PT00	E^2PROM serial communication date output, EE PROM communication KEY matrix OUT is combined.	O	SS IC508	KOUT4/DATA TO EE
47	P21	E^2PROM serial communication clock output key matrix output, EE PROM communication KEY matrix OUT is combined.	O	SS IC508 VK	KOUT5/SCK EE
48	P22/PCL	Chip select to E^2PROM	O	SS IC508	$\overline{\text{EEPROM CS}}$
49	P23/BUZ	Buzzer out	O	SS	BUZZER
50	P30/LCDCL	CAMERA/LINE select output, Camera mode is selected wiht "H", VTR is selected with "L"	O	VA	CAM/$\overline{\text{LINE}}$
51	P31/SYNC	Video mute signal output terminal	O	VA	V MUTE
52	P32	Audio mute signal output terminal	O	VA	A MUTE
53	P33	Chip select to serial/parallel IC. Not used.	O		SP CS
54	V_{DD}	V_E 3V/5V power source terminal		FU	V_{DD}
55	XT1	Sub system clock 32K oscillation terminal	I	FU	XT1
56	XT2			FU	XT2
57	NC			—	NC
58	X1	Main system clock 4.19M oscillation terminal	I	FU	X1
59	X2		I	FU	X2
60	P60/KK0	KEY matrix input terminal 18msec period normally "H" Input-Output is possible by bit. Pull-up from software is possible by 4-bit.	I	all	K IN 0
61	P61/KR1		I	all	K IN 1
62	P62/KR2		I	all	K IN 2
63	P63/KR3		I	all	K IN 3
64	P70/KR4	KEY matrix input terminal. 18msec period normally "H" 4-bit input-Output port. Pull-up from software is possible by 4-bit.	I	all	K IN 4
65	P71/KR5		I	all	K IN 5
66	P72/KR6		I	all	K IN 6
67	P73/KR7		I	all	K IN 7
68	$\overline{\text{RESET}}$	System reset input, Reset input terminal of microcomputer	I		$\overline{\text{RESET}}$
69	S0	Segment signal output terminal not used.	O		
70	S1		O		
71	S2		O		
72	S3		O		
73	S4		O		
74	S5		O		
75	S6	LCD segment signal output terminal. (Four value output of 0, 1.7, 3.3, 5V). Not used.	O		
76	S7		O		
77	S8		O		
78	S9		O		
79	S10		O		
80	S11		O		

3-13. AUDIO BLOCK DIAGRAM

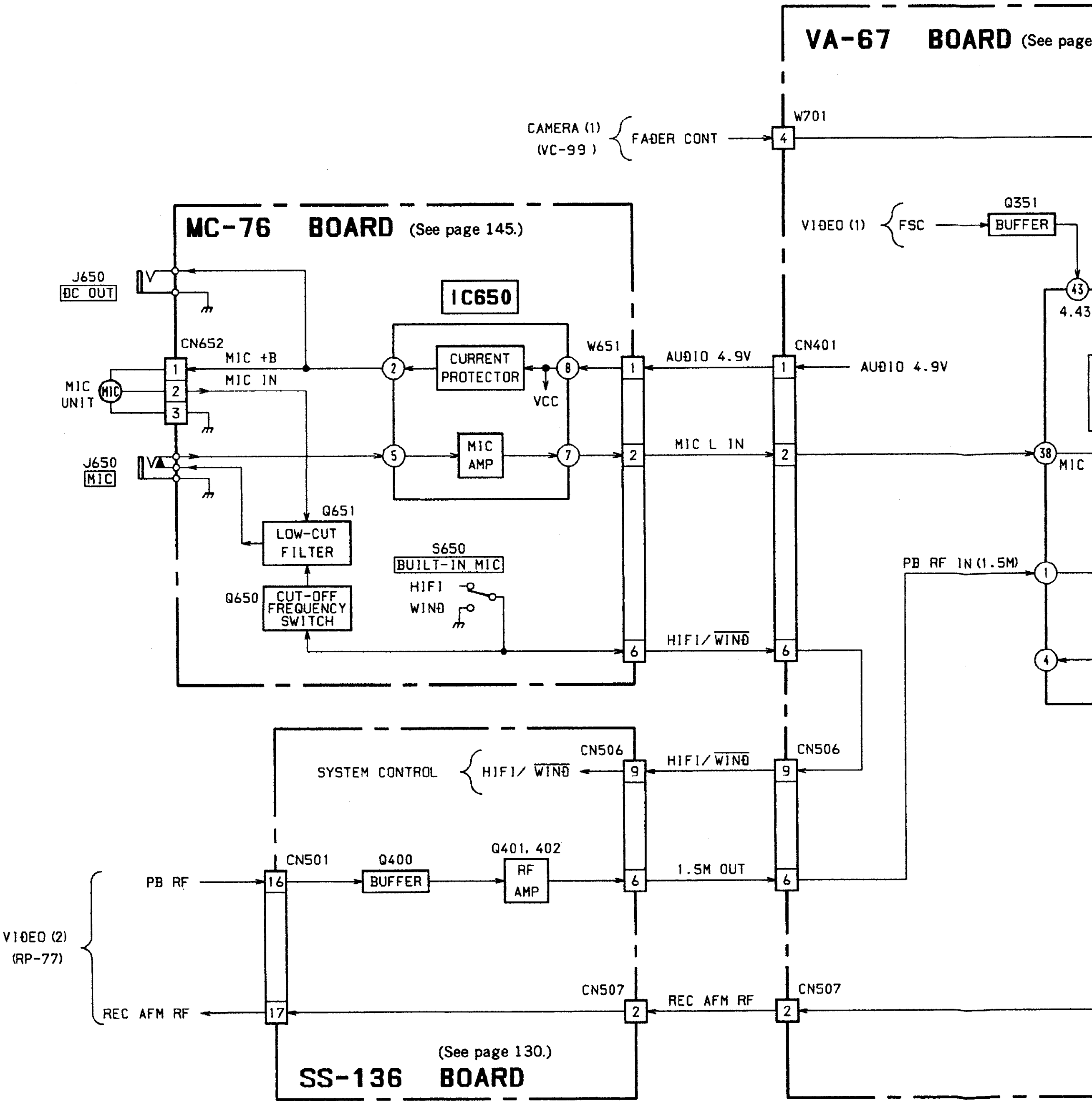

ARD (See page 114.)

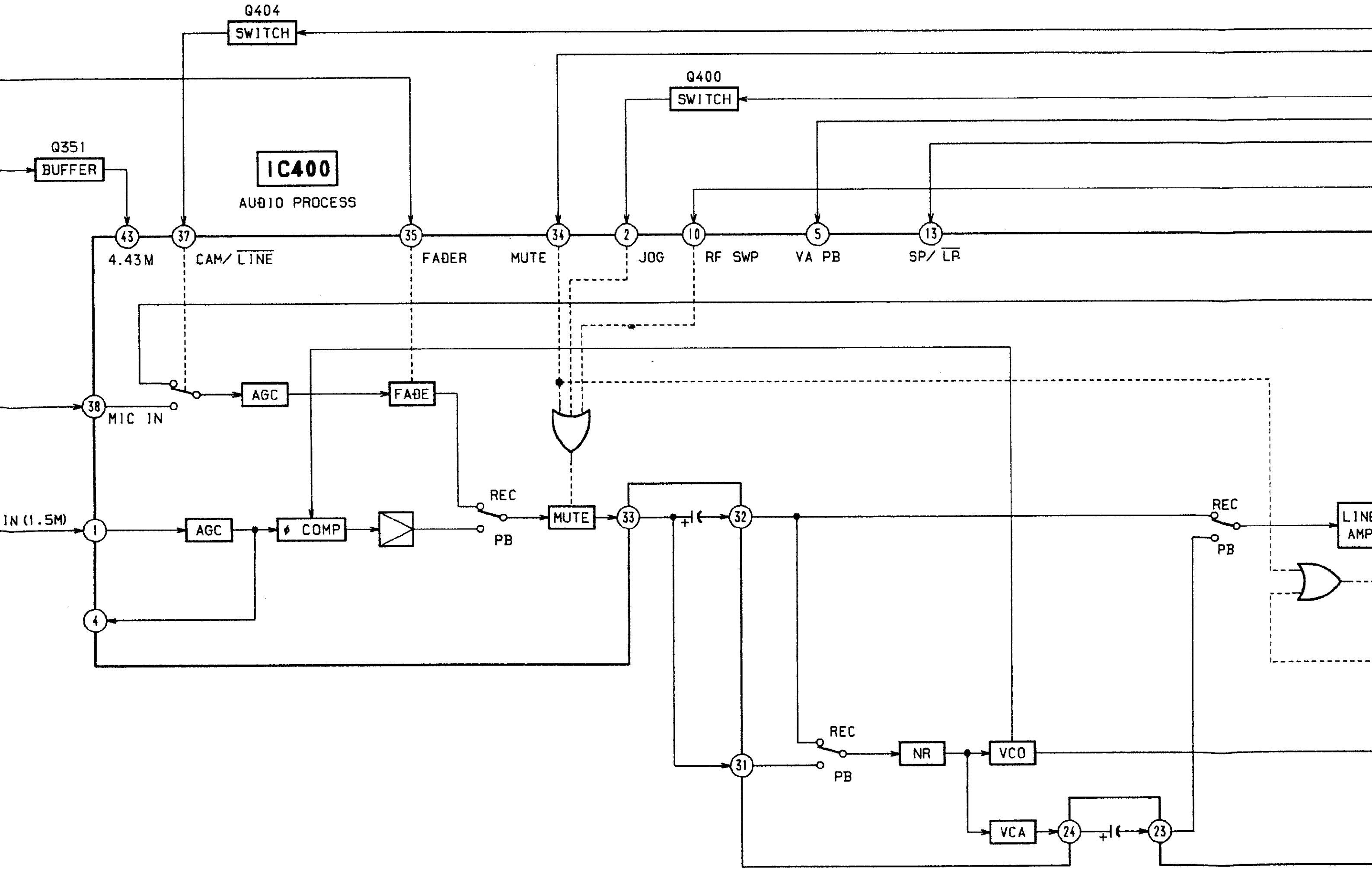

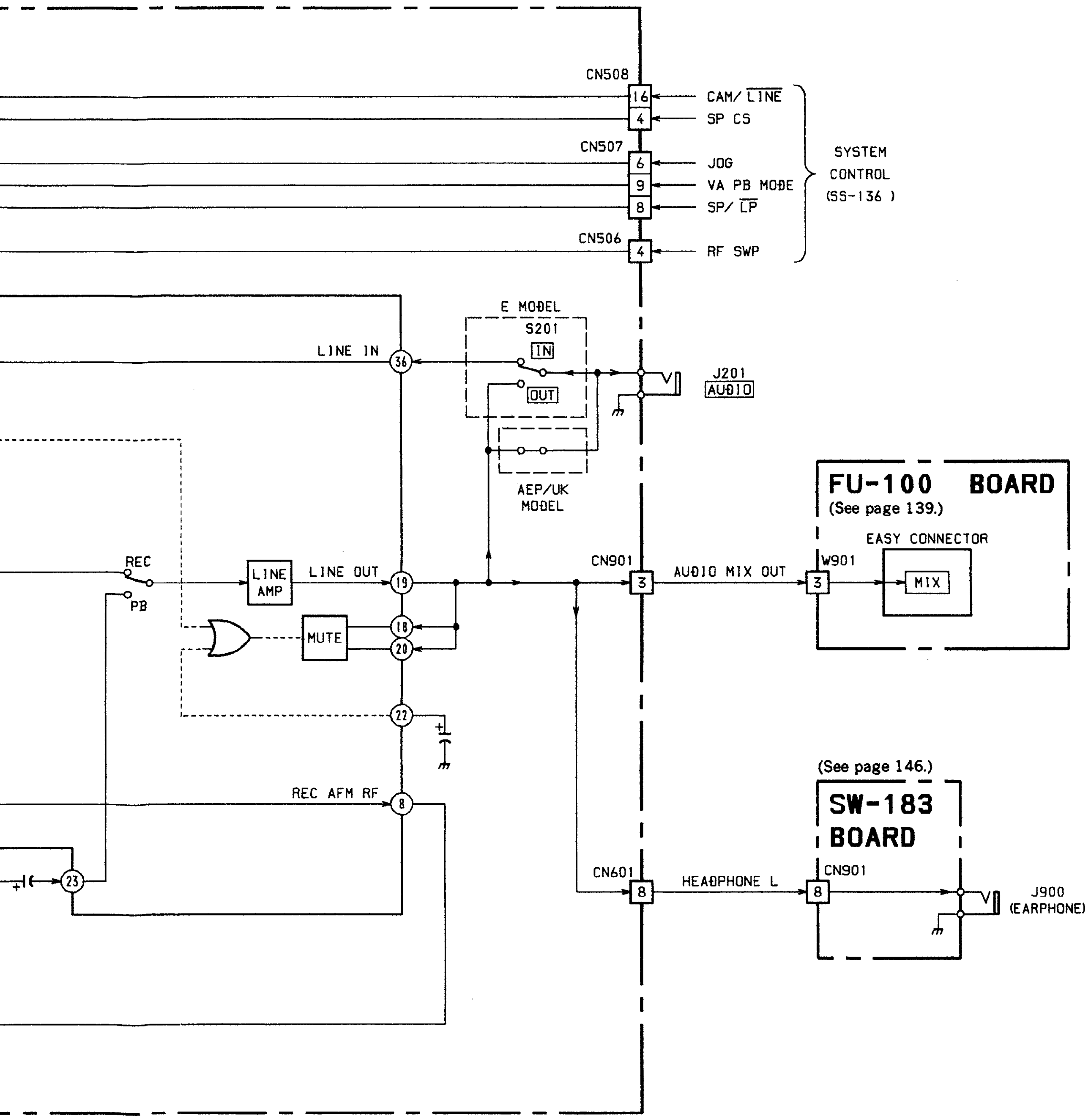

CN508
16
4
CAM/ LINE
SP CS
CN507
6
9
8
JOG
VA PB MODE
SP/ LP
SYSTEM
CONTROL
(SS-136)
CN506
4
RF SWP
E MODEL
S201
IN
OUT
LINE IN
36
J201
AUDIO
AEP/UK
MODEL
FU-100 BOARD
(See page 139.)
EASY CONNECTOR
W901
3
MIX
REC
PB
LINE
AMP
LINE OUT
19
18
20
MUTE
22
CN901
3
AUDIO MIX OUT
REC AFM RF
8
23
(See page 146.)
SW-183
BOARD
CN601
8
HEADPHONE L
CN901
8
J900
(EARPHONE)

CCD-F455E

3-14. VIEWFINDER BLOCK DIAGRAM

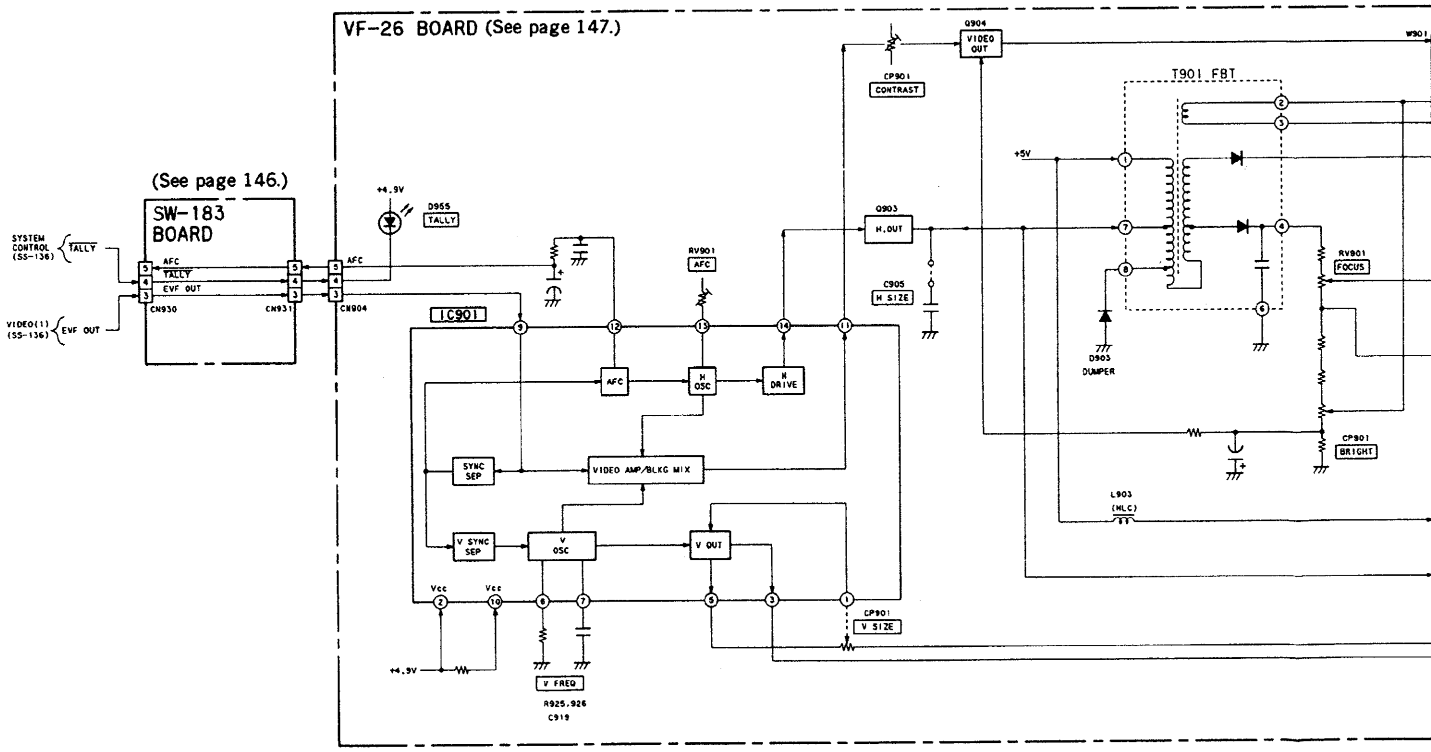

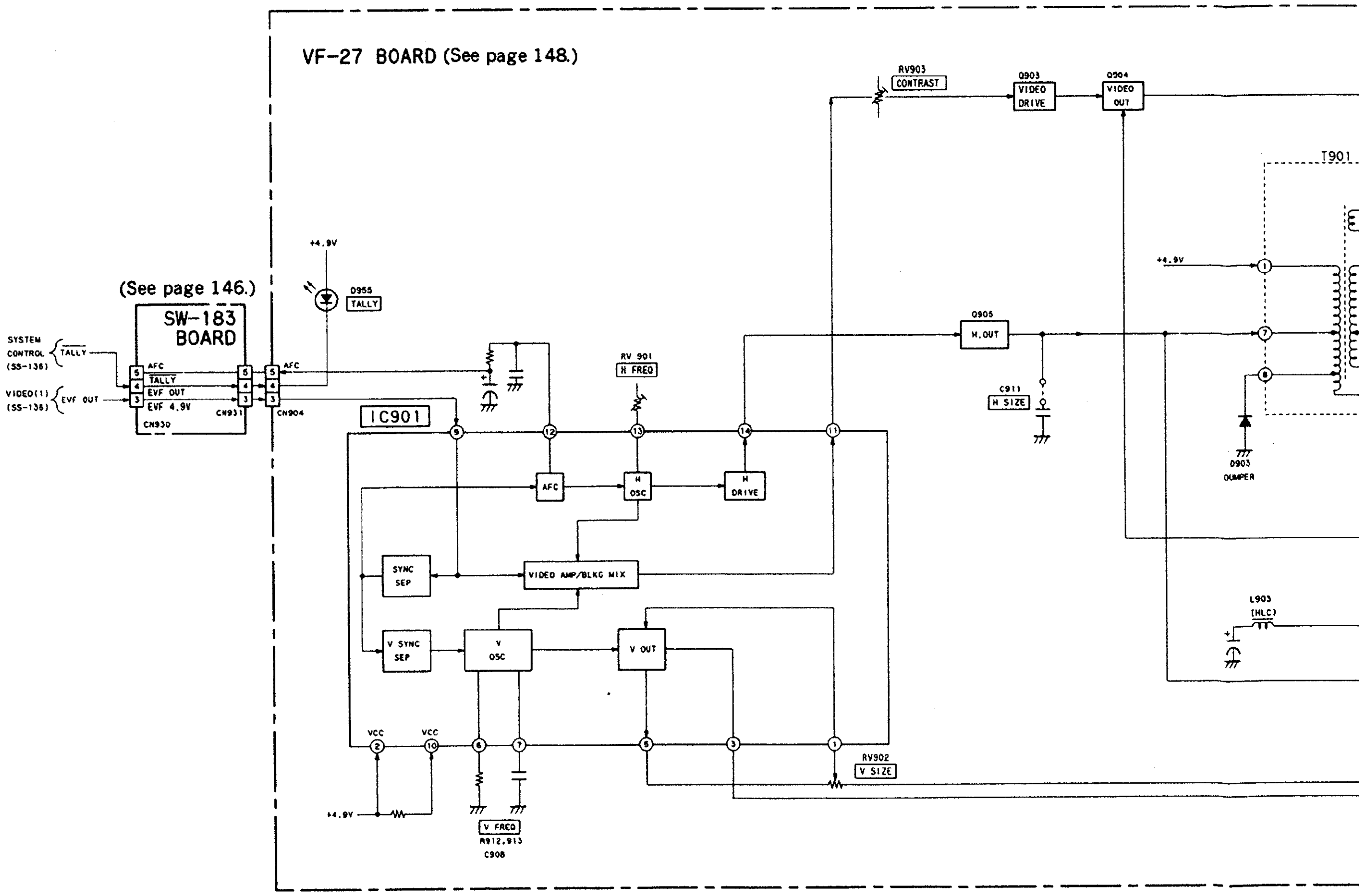

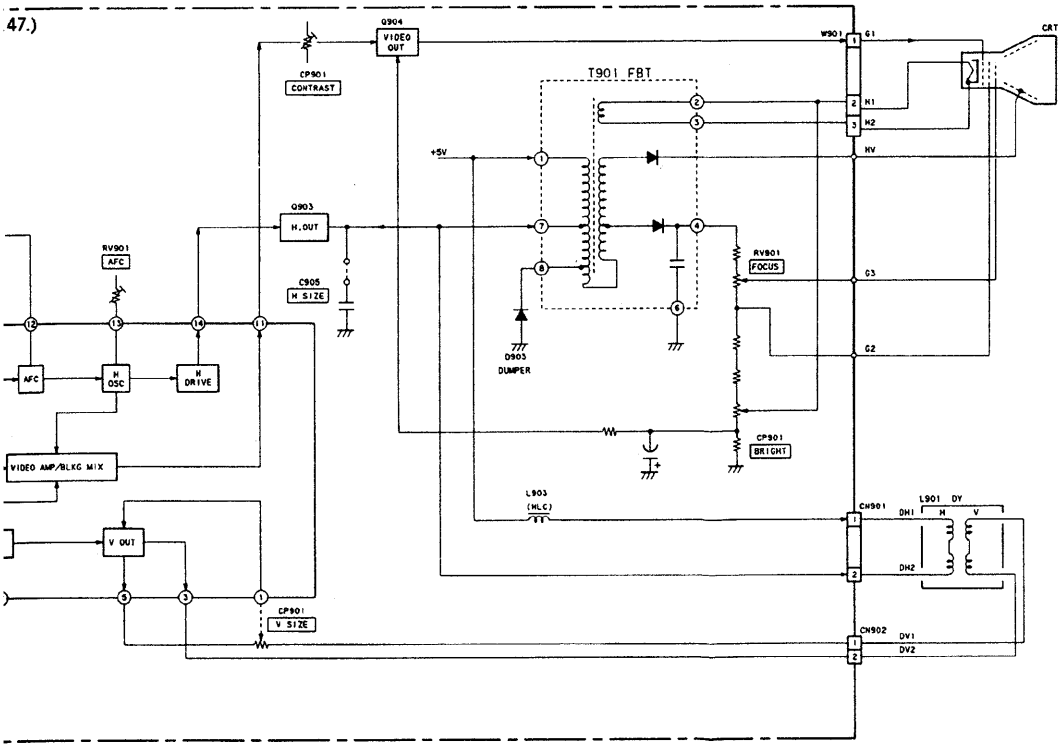
47.)
Q904
VIDEO OUT
CP901
CONTRAST
W901
G1
CRT
T901 FBT
H1
H2
+5V
HV
Q903
H.OUT
RV901
AFC
C905
H SIZE
RV801
FOCUS
G3
G2
D903
DUMPER
AFC
H OSC
H DRIVE
VIDEO AMP/BLKG MIX
CP901
BRIGHT
L903
(HLC)
CN901
L901 DY
DH1
H
V
DH2
V OUT
CP901
V SIZE
CN902
DV1
DV2

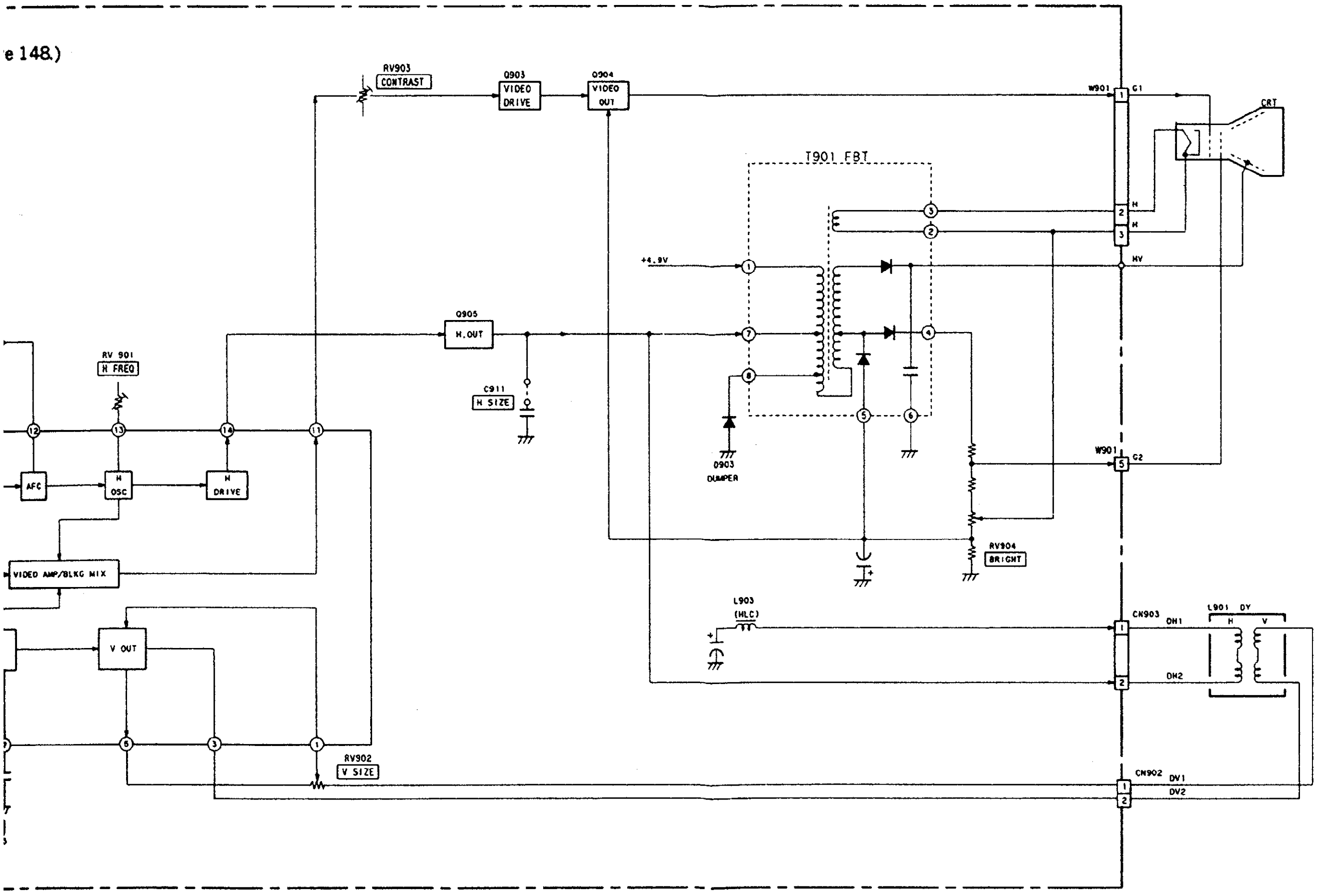
e 148.)
RV903
CONTRAST
Q903
VIDEO DRIVE
Q904
VIDEO OUT
W901
G1
CRT
T901 FBT
H
H
+4.9V
HV
Q905
H.OUT
RV 901
H FREQ
C911
H SIZE
D903
DUMPER
W901
G2
AFC
H OSC
H DRIVE
VIDEO AMP/BLKG MIX
RV904
BRIGHT
L903
(HLC)
CN903
DH1
L901 DY
H
V
DH2
V OUT
RV902
V SIZE
CN902
DV1
DV2

3-15. POWER BLOCK DIAGRAM

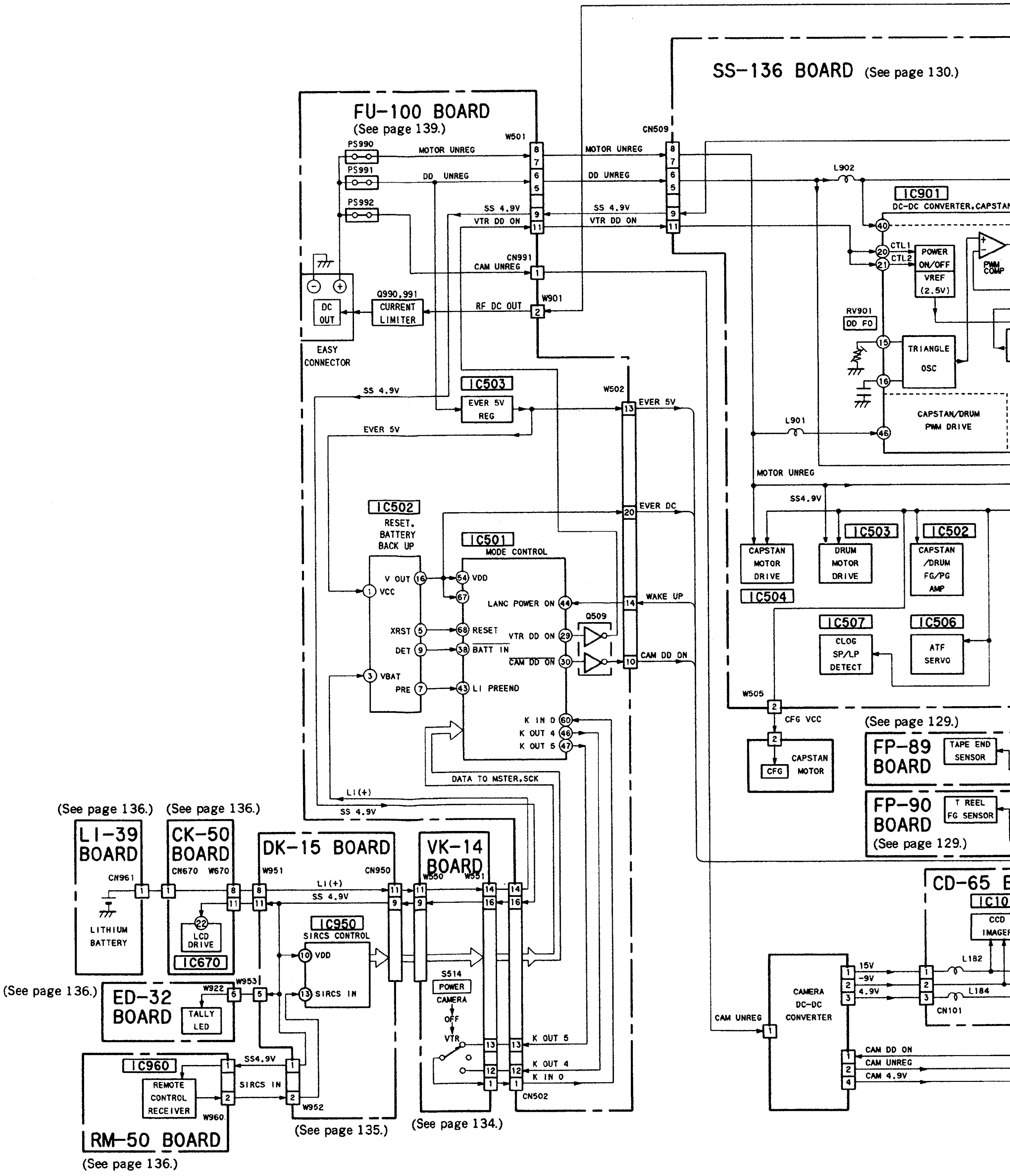

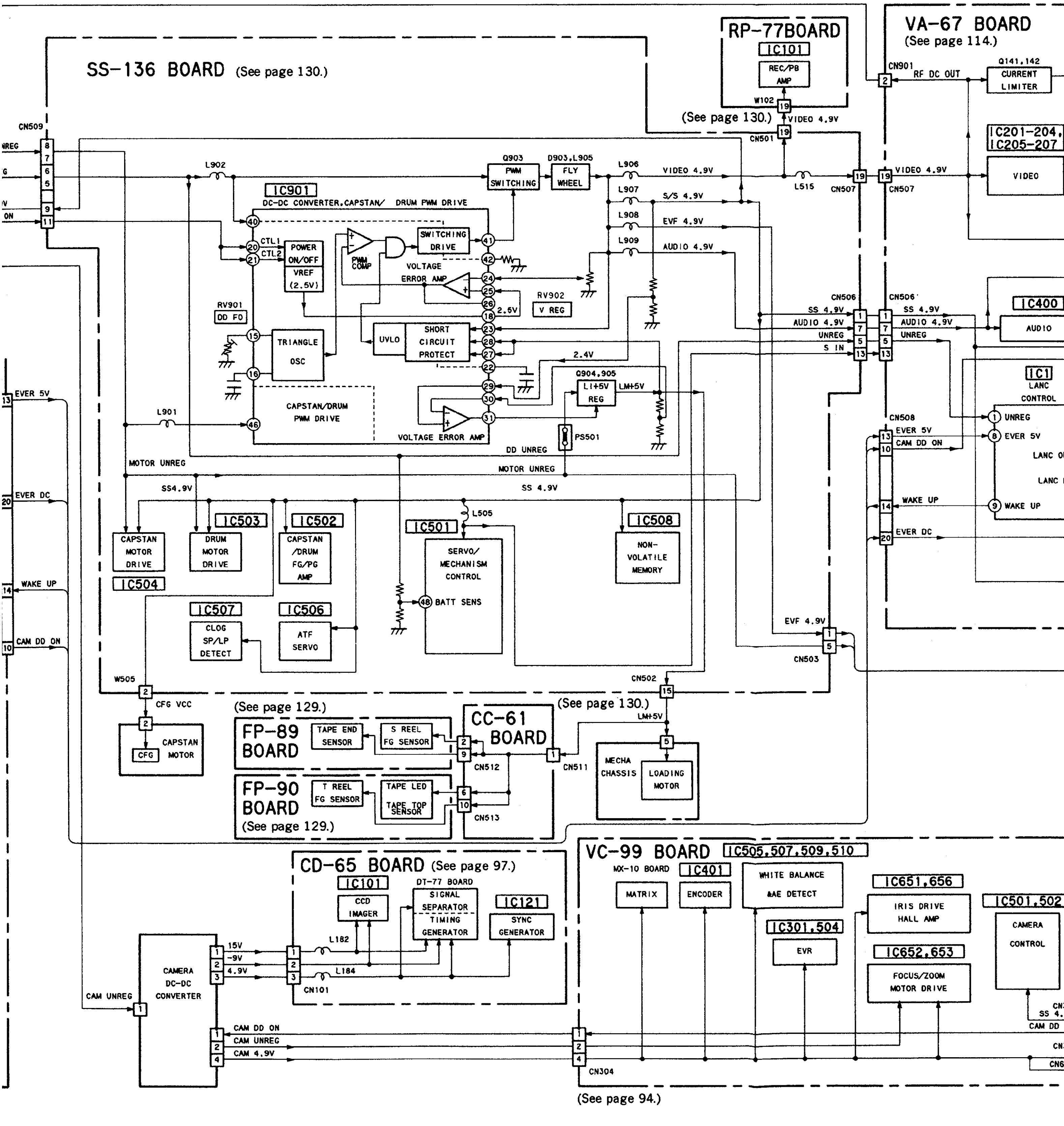
SS-136 BOARD (See page 130.)
RP-77BOARD
IC101
REC/PB AMP
(See page 130.)
VIDEO 4.9V
VA-67 BOARD
(See page 114.)
RF DC OUT
CURRENT LIMITER
IC201-204, IC205-207
VIDEO
IC901
DC-DC CONVERTER, CAPSTAN/ DRUM PWM DRIVE
PWM SWITCHING
FLY WHEEL
POWER ON/OFF
VREF (2.5V)
PWM COMP
SWITCHING DRIVE
VOLTAGE ERROR AMP
S/S 4.9V
EVF 4.9V
AUDIO 4.9V
RV901 DD FO
RV902 V REG
TRIANGLE OSC
UVLO
SHORT CIRCUIT PROTECT
CAPSTAN/DRUM PWM DRIVE
VOLTAGE ERROR AMP
LI+5V REG
LM+5V
PS501
DD UNREG
MOTOR UNREG
SS 4.9V
IC400
AUDIO
SS 4.9V
UNREG
S IN
IC1
LANC CONTROL
EVER 5V
CAM DD ON
WAKE UP
EVER DC
EVER 5V
EVER DC
WAKE UP
CAM DD ON
IC503
IC502
IC501
IC508
CAPSTAN MOTOR DRIVE
DRUM MOTOR DRIVE
CAPSTAN /DRUM FG/PG AMP
SERVO/ MECHANISM CONTROL
BATT SENS
NON-VOLATILE MEMORY
IC504
IC507
IC506
CLOG SP/LP DETECT
ATF SERVO
EVF 4.9V
CFG VCC
CAPSTAN MOTOR
CFG
(See page 129.)
FP-89 BOARD
TAPE END SENSOR
S REEL FG SENSOR
CC-61 BOARD
(See page 130.)
MECHA CHASSIS
LOADING MOTOR
FP-90 BOARD
T REEL FG SENSOR
TAPE LED
TAPE TOP SENSOR
(See page 129.)
CD-65 BOARD (See page 97.)
IC101
CCD IMAGER
DT-77 BOARD
SIGNAL SEPARATOR
TIMING GENERATOR
IC121
SYNC GENERATOR
CAMERA DC-DC CONVERTER
CAM UNREG
15V
-9V
4.9V
CAM DD ON
CAM UNREG
CAM 4.9V
VC-99 BOARD
IC505,507,509,510
MX-10 BOARD
IC401
MATRIX
ENCODER
WHITE BALANCE &AE DETECT
IC651,656
IRIS DRIVE HALL AMP
IC501,502
CAMERA CONTROL
IC301,504
EVR
IC652,653
FOCUS/ZOOM MOTOR DRIVE
(See page 94.)

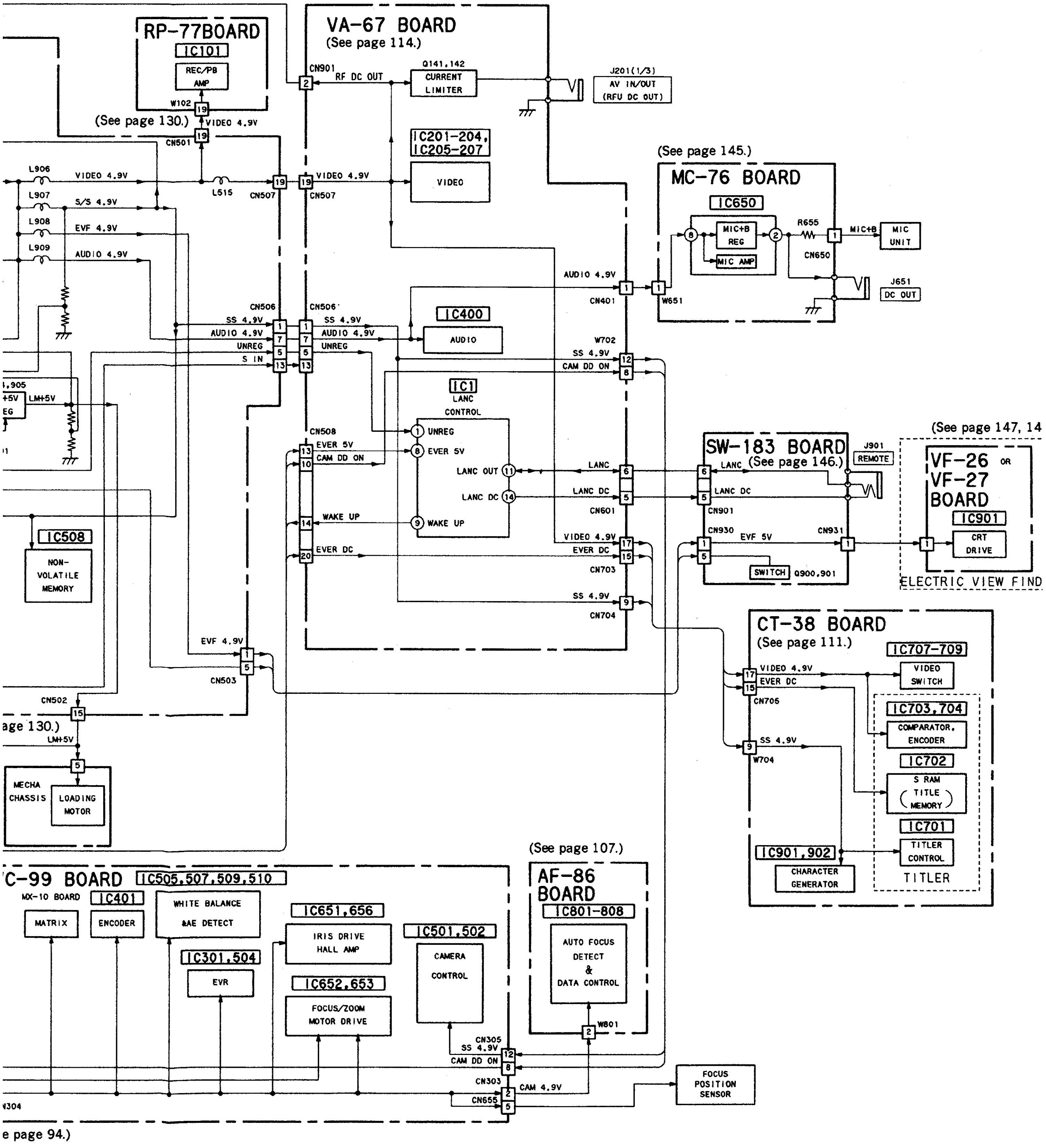
RP-77BOARD
IC101
REC/PB AMP
(See page 130.)
VA-67 BOARD
(See page 114.)
RF DC OUT
CURRENT LIMITER
J201(1/3)
AV IN/OUT
(RFU DC OUT)
IC201-204, IC205-207
VIDEO
(See page 145.)
MC-76 BOARD
IC650
MIC+B REG
MIC AMP
MIC UNIT
J651
DC OUT
IC400
AUDIO
IC1
LANC CONTROL
IC508
NON-VOLATILE MEMORY
SW-183 BOARD
(See page 146.)
J901
REMOTE
(See page 147, 14
VF-26 OR VF-27 BOARD
IC901
CRT DRIVE
ELECTRIC VIEW FIND
CT-38 BOARD
(See page 111.)
IC707-709
VIDEO SWITCH
IC703,704
COMPARATOR, ENCODER
IC702
S RAM (TITLE MEMORY)
IC701
TITLER CONTROL
IC901,902
CHARACTER GENERATOR
TITLER
MECHA CHASSIS
LOADING MOTOR
age 130.)
C-99 BOARD
IC505,507,509,510
MX-10 BOARD
MATRIX
IC401
ENCODER
WHITE BALANCE &AE DETECT
IC651,656
IRIS DRIVE HALL AMP
IC501,502
CAMERA CONTROL
IC301,504
EVR
IC652,653
FOCUS/ZOOM MOTOR DRIVE
(See page 107.)
AF-86 BOARD
IC801-808
AUTO FOCUS DETECT & DATA CONTROL
FOCUS POSITION SENSOR
e page 94.)

SECTION 4
PRINTED WIRING BOARDS AND SCHEMATIC DIAGRAMS

4-1. FRAME SCHEMATIC DIAGRAM

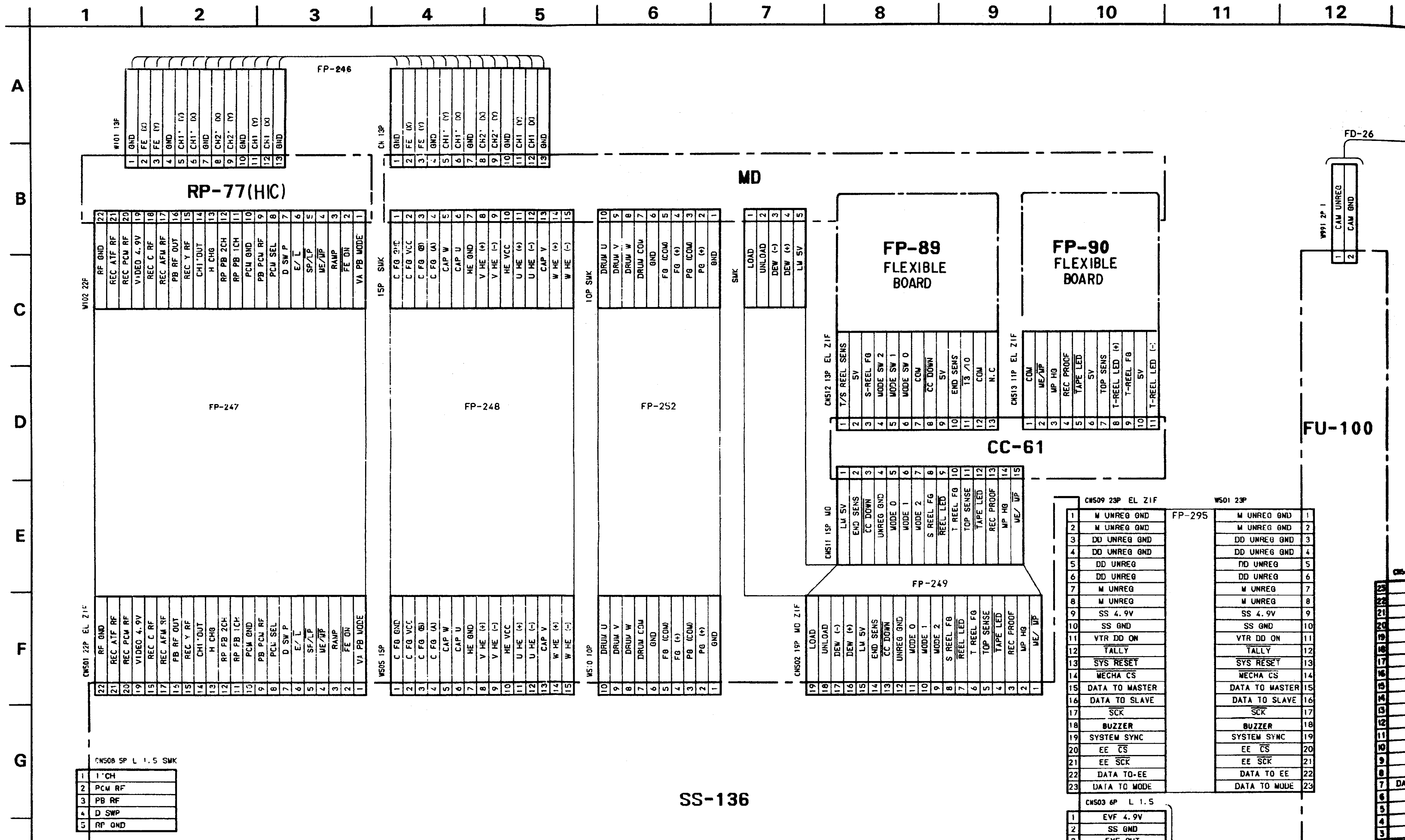

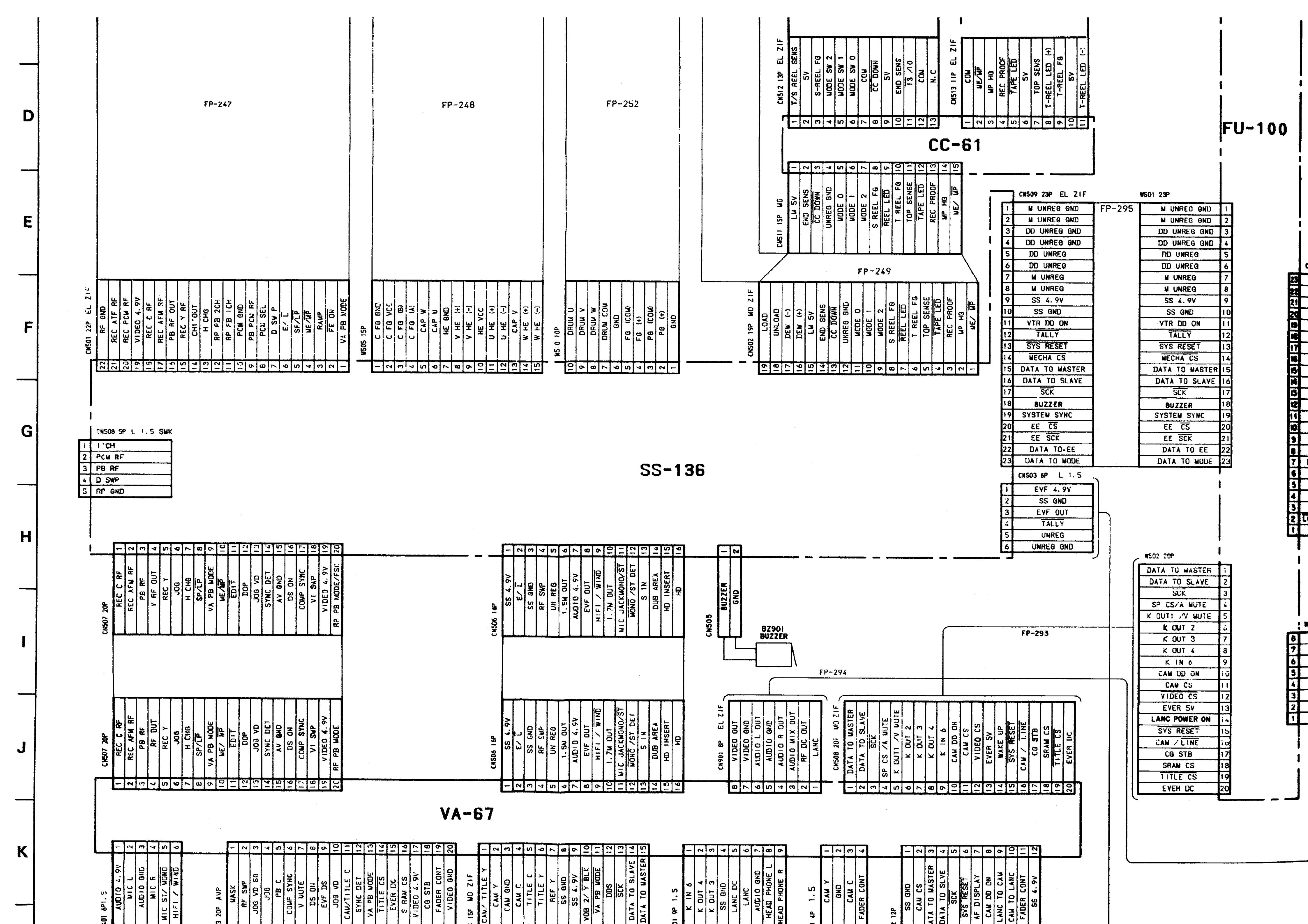

D
E
F
G
H
I
J
K
FP-247
FP-248
FP-252
FU-100
CC-61
FP-295
FP-249
SS-136
VA-67
FP-293
FP-294
CN512 13P EL ZIF
CN513 11P EL ZIF
CN511 15P MO
CN509 23P EL ZIF
W501 23P
CN501 22P EL ZIF
W505 15P
W510 10P
CN502 19P MO ZIF
CN508 5P L 1.5 SMK
CN503 6P L 1.5
CN507 20P
CN506 16P
CN505
BZ901 BUZZER
W502 20P
CN901 8P EL ZIF
CN508 20P MO ZIF
M UNREG GND
DD UNREG GND
DD UNREG
M UNREG
SS 4.9V
SS GND
VTR DD ON
TALLY
SYS RESET
MECHA CS
DATA TO MASTER
DATA TO SLAVE
SCK
BUZZER
SYSTEM SYNC
EE CS
EE SCK
DATA TO-EE
DATA TO MODE
EVF 4.9V
EVF OUT
UNREG
UNREG GND
DATA TO MASTER
DATA TO SLAVE
SP CS/A MUTE
K OUT1 /V MUTE
K OUT 2
K OUT 3
K OUT 4
K IN 6
CAM DD ON
CAM CS
VIDEO CS
EVER 5V
LANC POWER ON
SYS RESET
CAM / LINE
CG STB
SRAM CS
TITLE CS
EVER DC

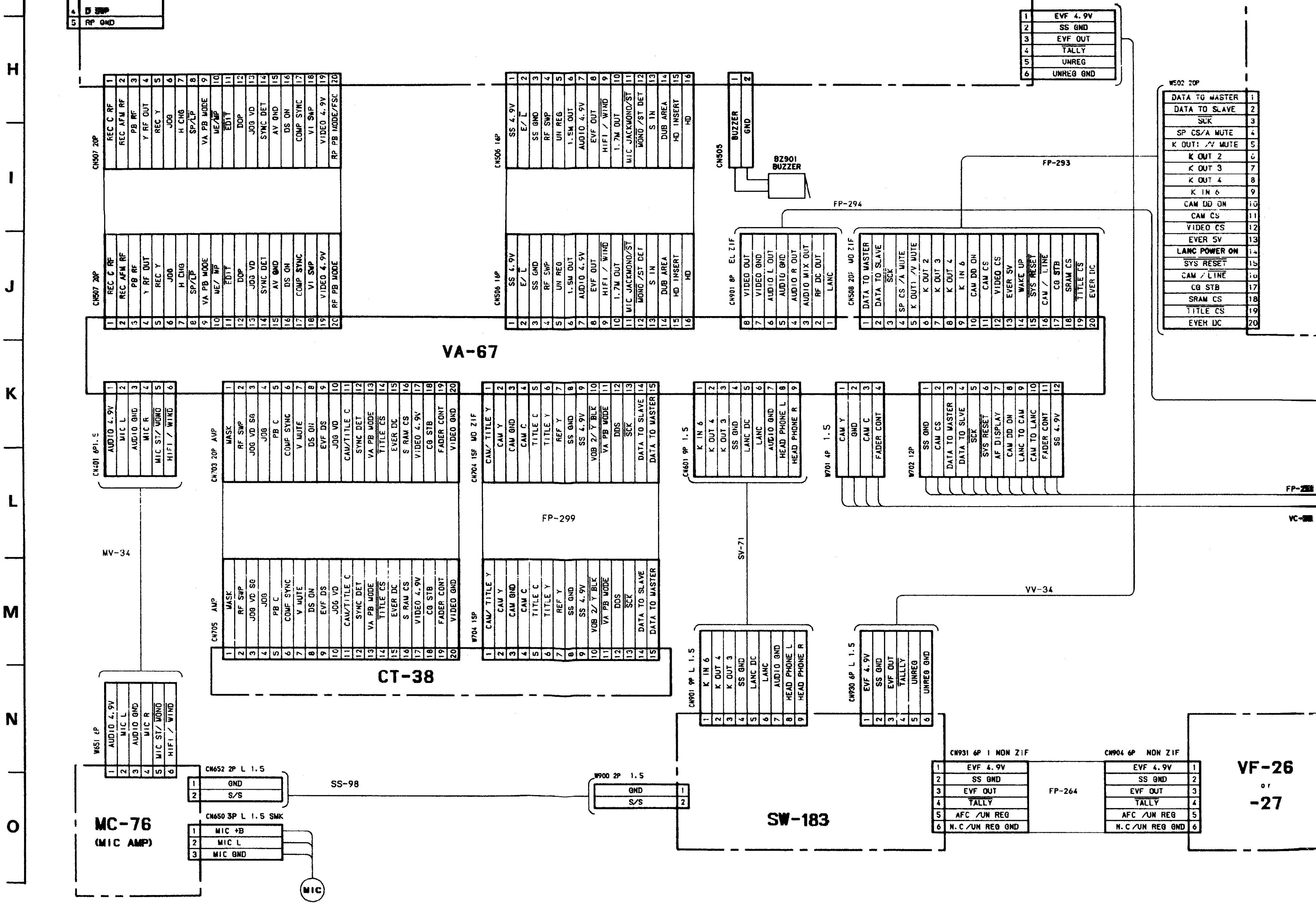
H
I
J
K
L
M
N
O
VA-67
CT-38
SW-183
MC-76
(MIC AMP)
VF-26
or
-27
CN507 20P
CN506 16P
CN505
BUZZER
GND
BZ901
BUZZER
CN901 8P EL ZIF
CN508 20P MD ZIF
W502 20P
FP-293
FP-294
CN401 6P1.5
CN703 20P AMP
CN704 15P MD ZIF
CN601 9P 1.5
W701 4P 1.5
W702 12P
FP-299
MV-34
SV-71
VV-34
CN705 AMP
W704 15P
W651 6P
CN901 9P L 1.5
CN930 6P L 1.5
CN652 2P L 1.5
SS-98
W900 2P 1.5
CN650 3P L 1.5 SMK
MIC +B
MIC L
MIC GND
MIC
CN931 6P I NON ZIF
CN904 6P NON ZIF
FP-264
EVF 4.9V
SS GND
EVF OUT
TALLY
UNREG
UNREG GND
AFC /UN REG
N.C/UN REG GND

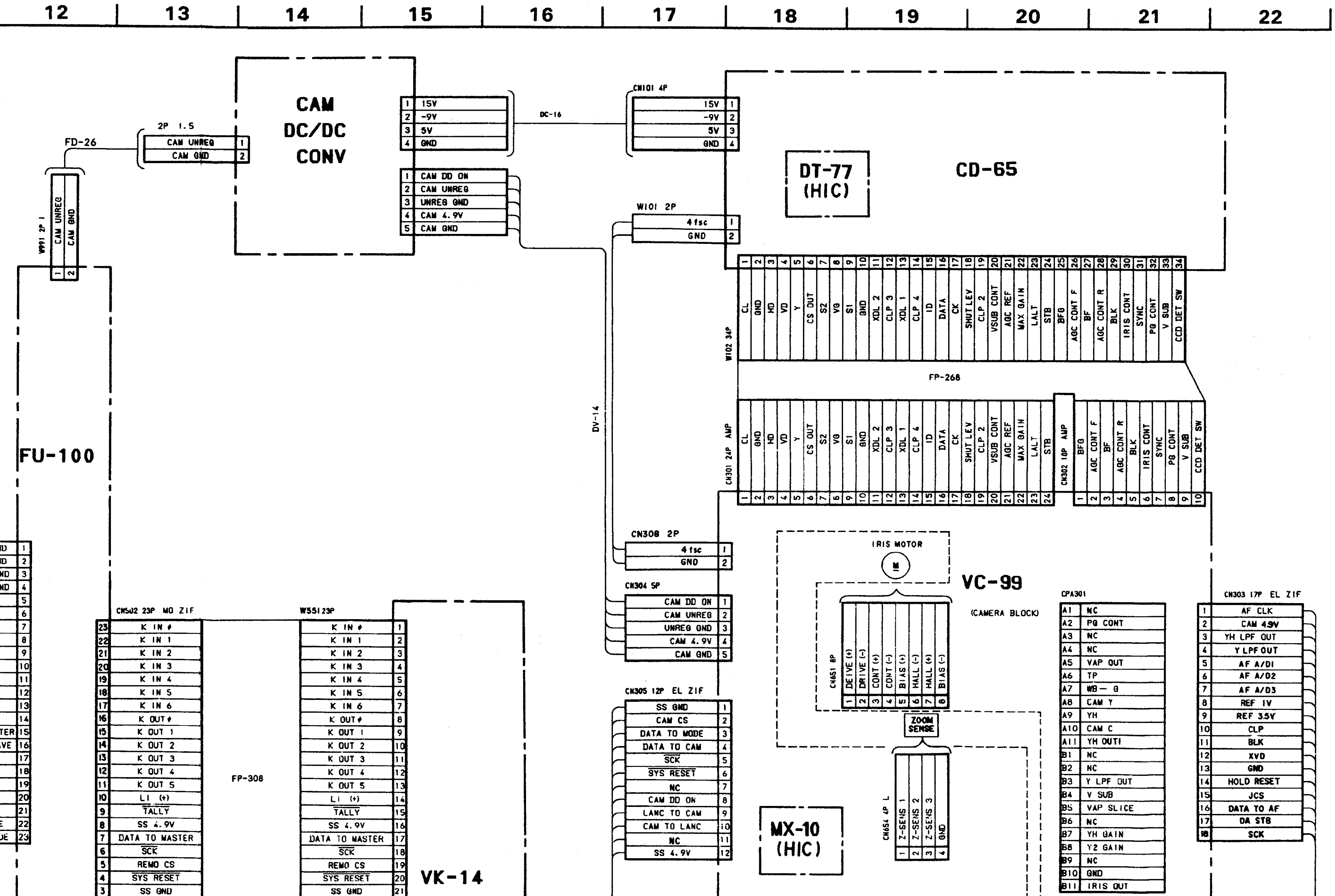

12
13
14
15
16
17
18
19
20
21
22
CAM DC/DC CONV
1 15V
2 -9V
3 5V
4 GND
1 CAM DD ON
2 CAM UNREG
3 UNREG GND
4 CAM 4.9V
5 CAM GND
DC-16
CN101 4P
15V 1
-9V 2
5V 3
GND 4
FD-26
2P 1.5
CAM UNREG 1
CAM GND 2
W991 2P 1
CAM UNREG
CAM GND
DT-77 (HIC)
CD-65
W101 2P
4fsc 1
GND 2
W102 34P
CL
GND
HD
VD
Y
CS OUT
S2
VG
S1
GND
XDL 2
CLP 3
XDL 1
CLP 4
ID
DATA
CK
SHUT LEV
CLP 2
VSUB CONT
AGC REF
MAX GAIN
LALT
STB
BFG
AGC CONT F
BF
AGC CONT R
BLK
IRIS CONT
SYNC
PG CONT
V SUB
CCD DET SW
FP-268
CN301 24P AMP
CN302 10P AMP
DV-14
FU-100
CN308 2P
4fsc 1
GND 2
CN304 5P
CAM DD ON 1
CAM UNREG 2
UNREG GND 3
CAM 4.9V 4
CAM GND 5
IRIS MOTOR
M
VC-99
(CAMERA BLOCK)
CN651 8P
DRIVE (+)
DRIVE (-)
CONT (+)
CONT (-)
BIAS (+)
HALL (+)
HALL (-)
BIAS (-)
ZOOM SENSE
CN654 4P L
Z-SENS 1
Z-SENS 2
Z-SENS 3
GND
CN305 12P EL ZIF
SS GND 1
CAM CS 2
DATA TO MODE 3
DATA TO CAM 4
SCK 5
SYS RESET 6
NC 7
CAM DD ON 8
LANC TO CAM 9
CAM TO LANC 10
NC 11
SS 4.9V 12
MX-10 (HIC)
CPA301
A1 NC
A2 PG CONT
A3 NC
A4 NC
A5 VAP OUT
A6 TP
A7 WB-G
A8 CAM Y
A9 YH
A10 CAM C
A11 YH OUTI
B1 NC
B2 NC
B3 Y LPF OUT
B4 V SUB
B5 VAP SLICE
B6 NC
B7 YH GAIN
B8 Y2 GAIN
B9 NC
B10 GND
B11 IRIS OUT
CN303 17P EL ZIF
1 AF CLK
2 CAM 4.9V
3 YH LPF OUT
4 Y LPF OUT
5 AF A/D1
6 AF A/D2
7 AF A/D3
8 REF 1V
9 REF 3.5V
10 CLP
11 BLK
12 XVD
13 GND
14 HOLD RESET
15 JCS
16 DATA TO AF
17 DA STB
18 SCK
CN502 23P MG ZIF
23 K IN 0
22 K IN 1
21 K IN 2
20 K IN 3
19 K IN 4
18 K IN 5
17 K IN 6
16 K OUT 0
15 K OUT 1
14 K OUT 2
13 K OUT 3
12 K OUT 4
11 K OUT 5
10 LI (+)
9 TALLY
8 SS 4.9V
7 DATA TO MASTER
6 SCK
5 REMO CS
4 SYS RESET
3 SS GND
FP-308
W551 23P
K IN 0 1
K IN 1 2
K IN 2 3
K IN 3 4
K IN 4 5
K IN 5 6
K IN 6 7
K OUT 0 8
K OUT 1 9
K OUT 2 10
K OUT 3 11
K OUT 4 12
K OUT 5 13
LI (+) 14
TALLY 15
SS 4.9V 16
DATA TO MASTER 17
SCK 18
REMO CS 19
SYS RESET 20
SS GND 21
VK-14

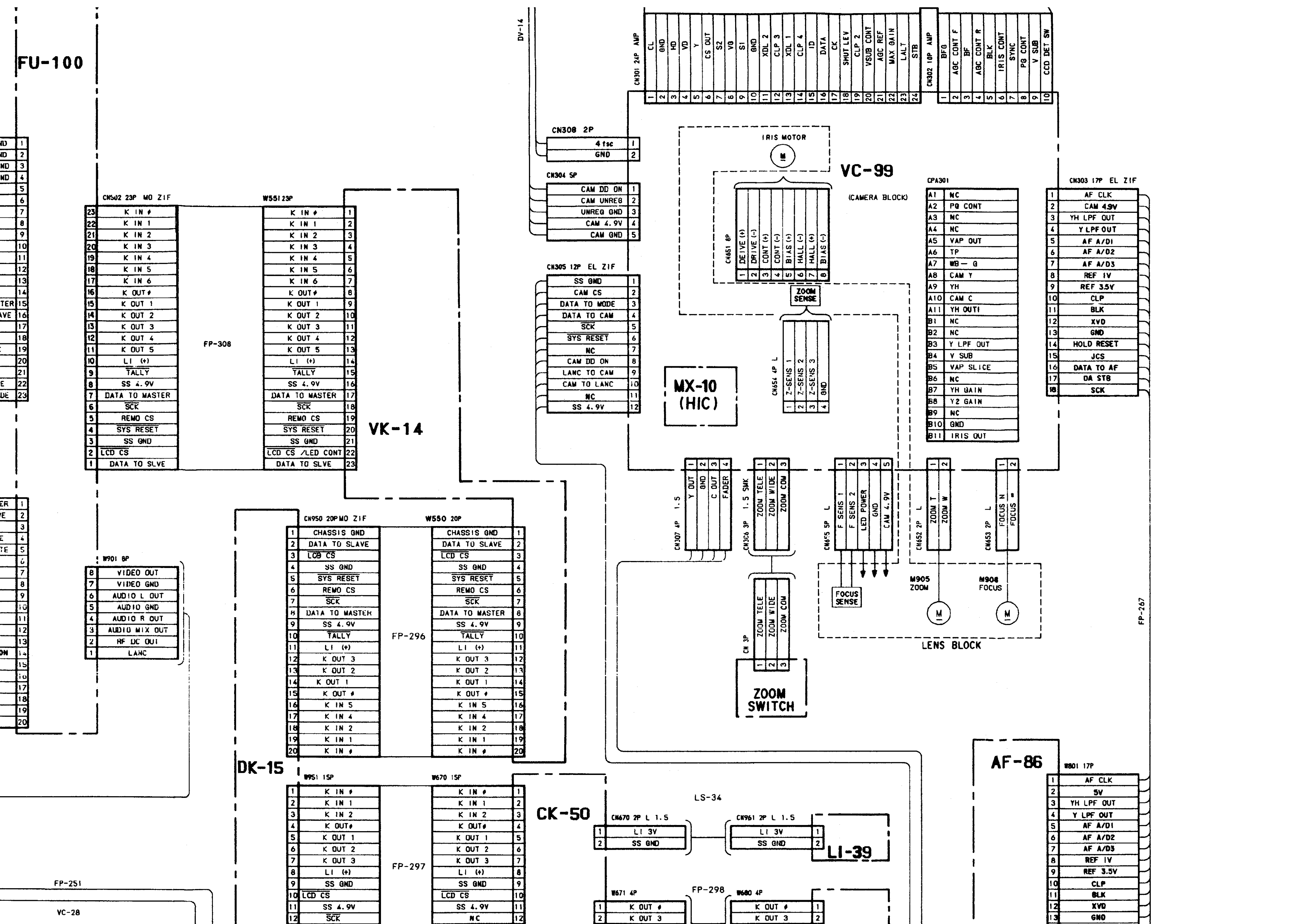

FU-100
DV-14
CN301 24P AMP
CL, GND, HD, VD, Y, CS OUT, S2, V0, S1, GND, XDL 2, CLP 3, XDL 1, CLP 4, ID, DATA, CK, SHUT LEV, CLP 2, VSUB CONT, AGC REF, MAX GAIN, LALT, STB
CN302 10P AMP
BFG, AGC CONT F, BF, AGC CONT R, BLK, IRIS CONT, SYNC, PG CONT, V SUB, CCD DET SW
CN308 2P
1 4 fsc
2 GND
CN304 5P
1 CAM DD ON
2 CAM UNREG
3 UNREG GND
4 CAM 4.9V
5 CAM GND
CN305 12P EL ZIF
1 SS GND
2 CAM CS
3 DATA TO MODE
4 DATA TO CAM
5 SCK
6 SYS RESET
7 NC
8 CAM DD ON
9 LANC TO CAM
10 CAM TO LANC
11 NC
12 SS 4.9V
IRIS MOTOR
M
VC-99
(CAMERA BLOCK)
CN651 8P
1 DEIVE (+)
2 DRIVE (-)
3 CONT (+)
4 CONT (-)
5 BIAS (+)
6 HALL (-)
7 HALL (+)
8 BIAS (-)
ZOOM SENSE
CN654 4P L
1 Z-SENS 1
2 Z-SENS 2
3 Z-SENS 3
4 GND
MX-10 (HIC)
CPA301
A1 NC
A2 PG CONT
A3 NC
A4 NC
A5 VAP OUT
A6 TP
A7 WB — G
A8 CAM Y
A9 YH
A10 CAM C
A11 YH OUT1
B1 NC
B2 NC
B3 Y LPF OUT
B4 V SUB
B5 VAP SLICE
B6 NC
B7 YH GAIN
B8 Y2 GAIN
B9 NC
B10 GND
B11 IRIS OUT
CN303 17P EL ZIF
1 AF CLK
2 CAM 4.9V
3 YH LPF OUT
4 Y LPF OUT
5 AF A/D1
6 AF A/D2
7 AF A/D3
8 REF IV
9 REF 3.5V
10 CLP
11 BLK
12 XVD
13 GND
14 HOLD RESET
15 JCS
16 DATA TO AF
17 DA STB
18 SCK
FP-267
CN307 4P 1.5
1 Y OUT
2 GND
3 C OUT
4 FADER
CN306 3P 1.5 SMK
1 ZOOM TELE
2 ZOOM WIDE
3 ZOOM COM
CN655 5P L
1 F SENS 1
2 F SENS 2
3 LED POWER
4 GND
5 CAM 4.9V
CN652 2P L
1 ZOOM T
2 ZOOM W
CN653 2P L
1 FOCUS N
2 FOCUS ∞
FOCUS SENSE
M905 ZOOM
M908 FOCUS
M
M
LENS BLOCK
CN 3P
1 ZOOM TELE
2 ZOOM WIDE
3 ZOOM COM
ZOOM SWITCH
CN502 23P MO ZIF
23 K IN ϕ
22 K IN 1
21 K IN 2
20 K IN 3
19 K IN 4
18 K IN 5
17 K IN 6
16 K OUTϕ
15 K OUT 1
14 K OUT 2
13 K OUT 3
12 K OUT 4
11 K OUT 5
10 LI (+)
9 TALLY
8 SS 4.9V
7 DATA TO MASTER
6 SCK
5 REMO CS
4 SYS RESET
3 SS GND
2 LCD CS
1 DATA TO SLVE
FP-308
W551 23P
1 K IN ϕ
2 K IN 1
3 K IN 2
4 K IN 3
5 K IN 4
6 K IN 5
7 K IN 6
8 K OUTϕ
9 K OUT 1
10 K OUT 2
11 K OUT 3
12 K OUT 4
13 K OUT 5
14 LI (+)
15 TALLY
16 SS 4.9V
17 DATA TO MASTER
18 SCK
19 REMO CS
20 SYS RESET
21 SS GND
22 LCD CS /LED CONT
23 DATA TO SLVE
VK-14
W901 8P
8 VIDEO OUT
7 VIDEO GND
6 AUDIO L OUT
5 AUDIO GND
4 AUDIO R OUT
3 AUDIO MIX OUT
2 RF DC OUT
1 LANC
CN950 20P MO ZIF
1 CHASSIS GND
2 DATA TO SLAVE
3 LCD CS
4 SS GND
5 SYS RESET
6 REMO CS
7 SCK
8 DATA TO MASTER
9 SS 4.9V
10 TALLY
11 LI (+)
12 K OUT 3
13 K OUT 2
14 K OUT 1
15 K OUT ϕ
16 K IN 5
17 K IN 4
18 K IN 2
19 K IN 1
20 K IN ϕ
FP-296
W550 20P
1 CHASSIS GND
2 DATA TO SLAVE
3 LCD CS
4 SS GND
5 SYS RESET
6 REMO CS
7 SCK
8 DATA TO MASTER
9 SS 4.9V
10 TALLY
11 LI (+)
12 K OUT 3
13 K OUT 2
14 K OUT 1
15 K OUT ϕ
16 K IN 5
17 K IN 4
18 K IN 2
19 K IN 1
20 K IN ϕ
DK-15
W951 15P
1 K IN ϕ
2 K IN 1
3 K IN 2
4 K OUTϕ
5 K OUT 1
6 K OUT 2
7 K OUT 3
8 LI (+)
9 SS GND
10 LCD CS
11 SS 4.9V
12 SCK
FP-297
W670 15P
1 K IN ϕ
2 K IN 1
3 K IN 2
4 K OUTϕ
5 K OUT 1
6 K OUT 2
7 K OUT 3
8 LI (+)
9 SS GND
10 LCD CS
11 SS 4.9V
12 NC
CK-50
LS-34
CN670 2P L 1.5
1 LI 3V
2 SS GND
CN961 2P L 1.5
1 LI 3V
2 SS GND
LI-39
W671 4P
1 K OUT ϕ
2 K OUT 3
FP-298
W680 4P
1 K OUT ϕ
2 K OUT 3
AF-86
W801 17P
1 AF CLK
2 5V
3 YH LPF OUT
4 Y LPF OUT
5 AF A/D1
6 AF A/D2
7 AF A/D3
8 REF IV
9 REF 3.5V
10 CLP
11 BLK
12 XVD
13 GND
FP-251
VC-28

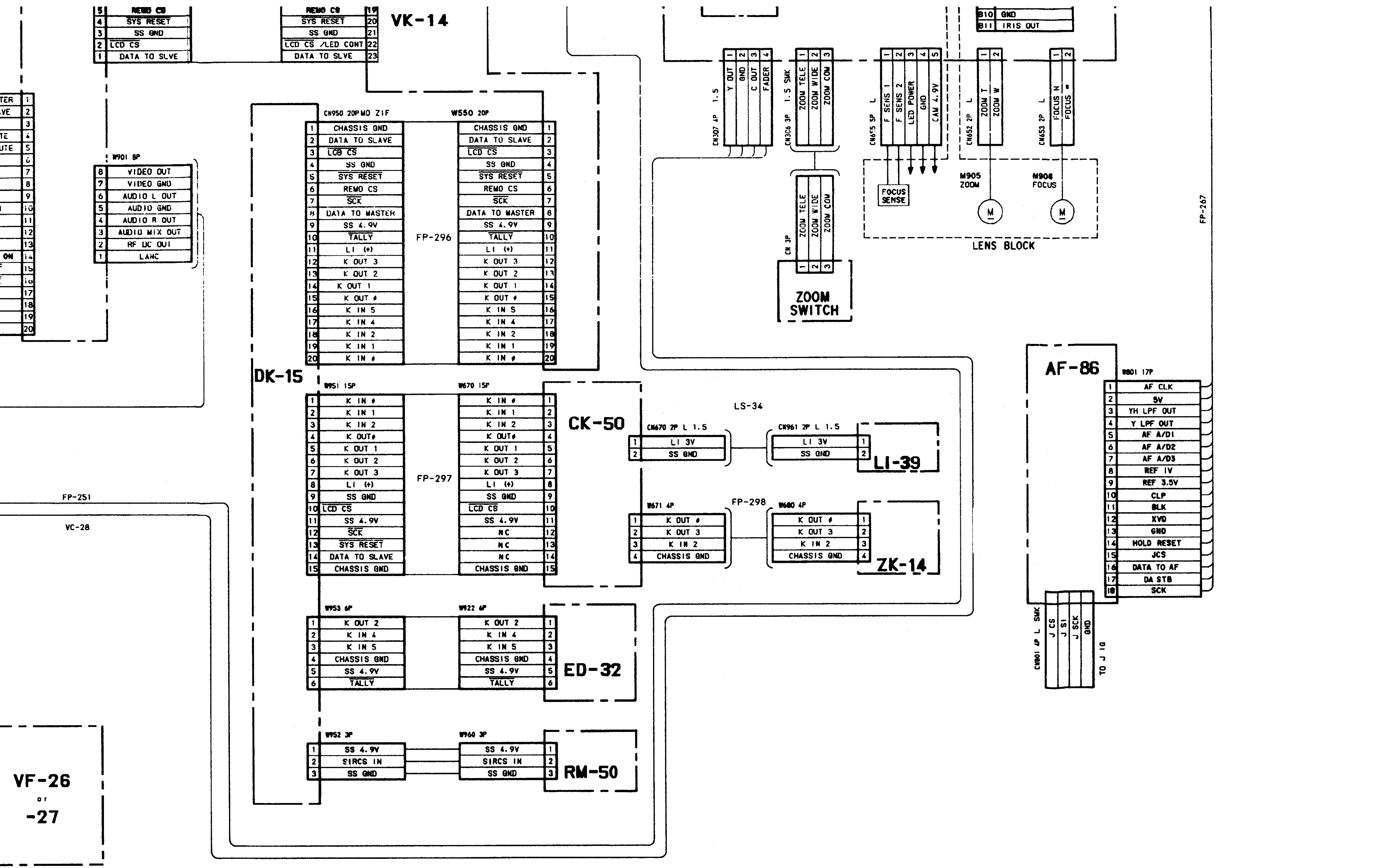
VK-14
DK-15
CK-50
LI-39
ZK-14
ED-32
RM-50
AF-86
VF-26 or -27
ZOOM SWITCH
LENS BLOCK
FOCUS SENSE
M905 ZOOM
M906 FOCUS
FP-296
FP-297
FP-298
FP-251
FP-267
VC-28
LS-34
CN950 20P MO ZIF
W550 20P
W951 15P
W670 15P
W953 6P
W922 6P
W952 3P
W960 3P
W901 8P
CN670 2P L 1.5
CN961 2P L 1.5
W671 4P
W680 4P
W801 17P
CN801 4P L SMK
TO J IO

4-2. PRINTED WIRING BOARDS AND SCHEMATIC DIAGRAMS

THIS NOTE IS COMMON FOR PRINTED WIRING BOARDS AND SCHEMATIC DIAGRAMS.
(In addition to this, the necessary note is printed in each block.)

- **For printed wiring boards.**
- ● : Through hole.
- ░ : Pattern from the side which enables seeing.
- ■ : Pattern of the rear side.*
- Circled numbers refer to waveforms.*

- **For schematic diagram.**
- Caution when replacing chip parts.
  New parts must be attached after removal of chip.
  Be careful not to heat the minus side of tantalum capacitor, because it is damaged by the heat.
- All resistors are in ohms, 1/10W or 1/16W unless otherwise noted.
  kΩ: 1000Ω, MΩ: 1000kΩ.
- All capacitors are in μF unless otherwise noted. pF : μμF.
  50V or less are not indicated except for electrolytics and tantalums.
- All variable and adjustable resistors have characteristic curve B, unless otherwise noted.
- ⊡ : nonflammable resistor.
- ⊡ : fusible resistor.
- ☐ : panel designation.
- △ : internal component.
- ☐ : adjustment for repair.*
- ━ : B + Line*
- Circled numbers refer to waveforms.*
- ⇨ : IN/OUT direction of B (+, −) line.*

Note: The components identified by mark ⚠ or dotted line with mark ⚠ are critical for safety.
Replace only with part number specified.

When indicating parts by reference number, please include the board name.

* Indicated by the color red.

- For voltage and waveforms. (CAMERA REC mode)
- Voltage and waveform measuring conditions:*
  (1) Sample object: Pattern box color bars.*
  (2) Voltage values: Relative to ground, measured with a DC digital multimeter (impedance 10M-ohm or more).*

1. Connection

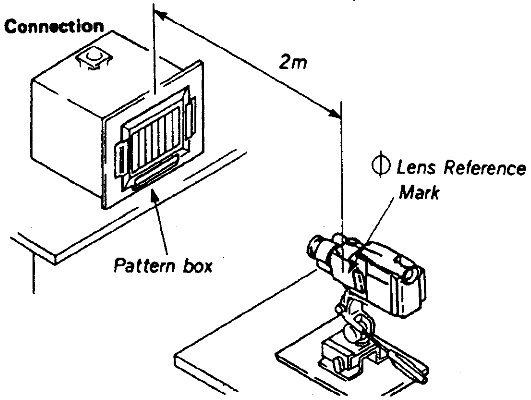

2. Adjust the zooming of camera and the tripod so that the output waveform of Fig. a and the picture of Fig. b can be obtain.

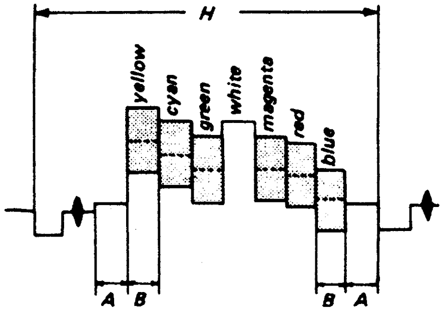

Fig. a Video output waveform.

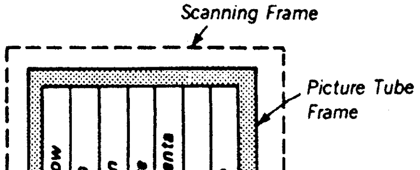

Precautions for replacement of CCD imager block.

- With a pair of IC101 (CCD imager) on the CD-65 complete board and IC001 (corrector ROM) on the DT-77 complete board, it is used a repair part of the CCD imager block.
  Since corrector ROM IC is manufactured to match the CCD imager, replacement of a single unit of the CCD imager corrector ROM cannot be allowed.
- When both a CCD imager and the corrector ROM, replace both the CCD imager and the corrector ROM, when a corrector ROM is not mounted on the service set, install a corrector ROM which is supplied anew.
- IC101 (CCD imager) is not mounted on the CD-65 complete board to be supplied as a repair part, and IC001 (corrector ROM) is not mounted on the DT-77 complete board to be supplied as a repair part. When the respective boards are replaced, remove the respective ICs from the old boards and install them to the new once respectively.
- After the CCD imager block has been replaced, perform the entire adjustments of the camera section.
- CCD imager is structurally in case of being broken down by static electricity.
  For this reason, take care to handle it as well as MOS IC. Moreover, care should be taken for dust not to be stuck on the light reseiving section and for strong light not to get into there.

- All capacitors are in μF unless otherwise noted. pF : μμF. 50V or less are not indicated except for electrolytics and tantalums.
- All variable and adjustable resistors have characteristic curve B, unless otherwise noted.
- [nonflammable resistor symbol] : nonflammable resistor.
- [fusible resistor symbol] : fusible resistor.
- [box] : panel designation.
- △ : internal component.
- [box] : adjustment for repair. *
- ——— : B + Line *
- Circled numbers refer to waveforms. *
- [arrow symbol] : IN/OUT direction of B (+, −) line. *

Note: The components identified by mark ⚠ or dotted line with mark ⚠ are critical for safety. Replace only with part number specified.

When indicating parts by reference number, please include the board name.

* Indicated by the color red.

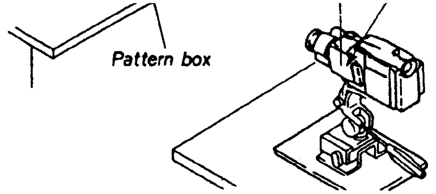

2. Adjust the zooming of camera and the tripod so that the output waveform of Fig. a and the picture of Fig. b can be obtain.

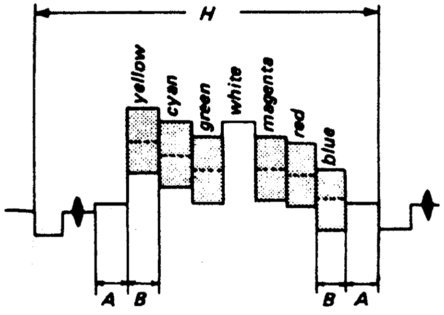

Fig. a Video output waveform.

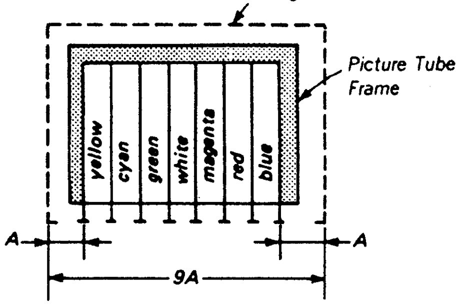

Fig. b Picture of TV monitor screen

- **For voltage and waveforms. (REC/PB mode)**
- Voltages are dc between ground and measurement points. *
- Readings are taken with a color-bar signal input. *
- Readings are taken with a digital multimeter (DC10MΩ). *
- Voltage variations may be noted due to normal production tolerances. *

which is supplied anew.

- IC101 (CCD imager) is not mounted on the CD-65 complete board to be supplied as a repair part, and IC001 (corrector ROM) is not mounted on the DT-77 complete board to be supplied as a repair part. When the respective boards are replaced, remove the respective ICs from the old boards and install them to the new once respectively.
- After the CCD imager block has been replaced, perform the entire adjustments of the camera section.
- CCD imager is structurally in case of being broken down by static electricity.
  For this reason, take care to handle it as well as MOS IC. Moreover, care should be taken for dust not to be stuck on the light reseiving section and for strong light not to get into there.

[SEMICONDUCTOR LOCATION]

In this service manual, the mounted locations of the semiconductors (IC, transistor, diodes) are indicated in red as shown below. This enables to find the location on the board easily when servicing.

Q187(E-21)Q188(E-22) | || Q195(C-12)

[To set the AEP, UK model to REC mode]

1. Enter SERVICE mode with the adjustment remote control. (Refer to page 190 for details.)
2. Set the data at adress: 00 on page: 1 to 01 * 1.
3. Set the data at address: 02 on page: D to 03 * 1.
4. Turn the power of the set off.
5. Turn the power of the set on.
6. Make shorting once for S510 land (REC switch) of VK-14 board.

After voltage measurement and adjustment, restore as follows:

1. Set the data at address: 00 on page: 1 to 01 * 1.
2. Set the data at address: 02 on page: D to 02 * 1.

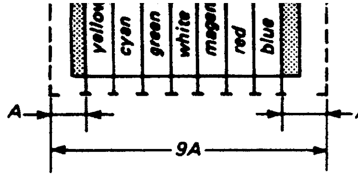

Fig. b Picture of TV monitor screen

- **For voltage and waveforms. (REC/PB mode)**
- Voltages are dc between ground and measurement points. *
- Readings are taken with a color-bar signal input. *
- Readings are taken with a digital multimeter (DC10MΩ). *
- Voltage variations may be noted due to normal production tolerances. *

[SEMICONDUCTOR LOCATION]

In this service manual, the mounted locations of the semiconductors (IC, transistor, diodes) are indicated in red as shown below. This enables to find the location on the board easily when servicing.

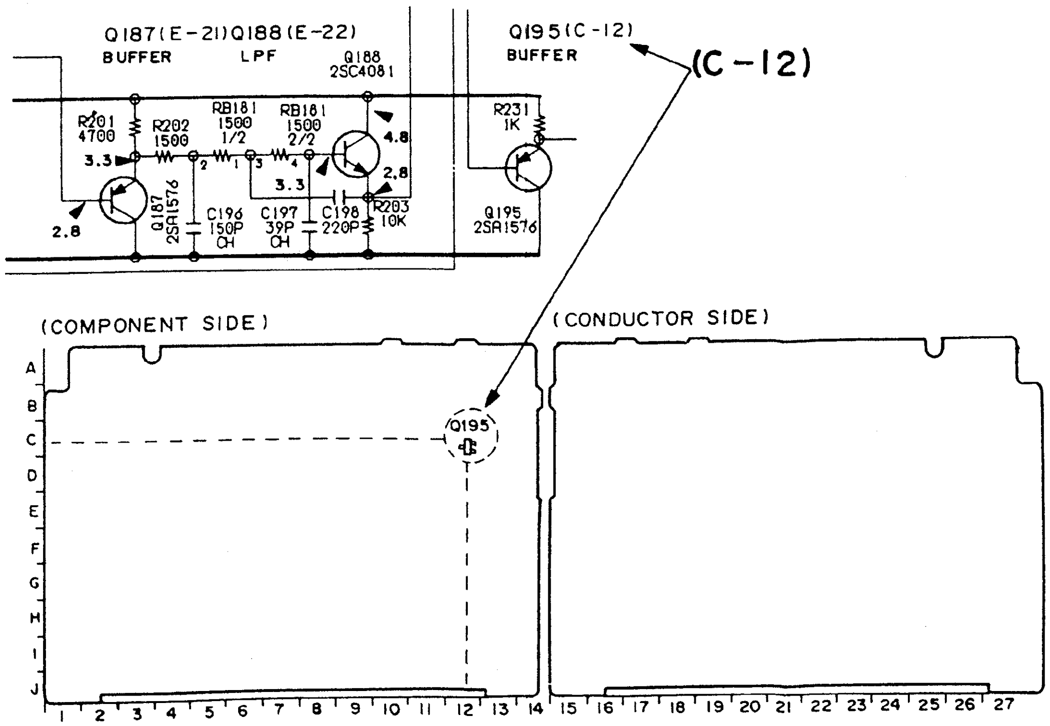

[To set the AEP, UK model to REC mode]

1. Enter SERVICE mode with the adjustment remote control. (Refer to page 190 for details.)
2. Set the data at adress: 00 on page: 1 to 01 * 1.
3. Set the data at address: 02 on page: D to 03 * 1.
4. Turn the power of the set off.
5. Turn the power of the set on.
6. Make shorting once for S510 land (REC switch) of VK-14 board.

After voltage measurement and adjustment, restore as follows:

1. Set the data at address: 00 on page: 1 to 01 * 1.
2. Set the data at address: 02 on page: D to 02 * 1.
3. Turn the power of the set off.

*1 [To change the data]

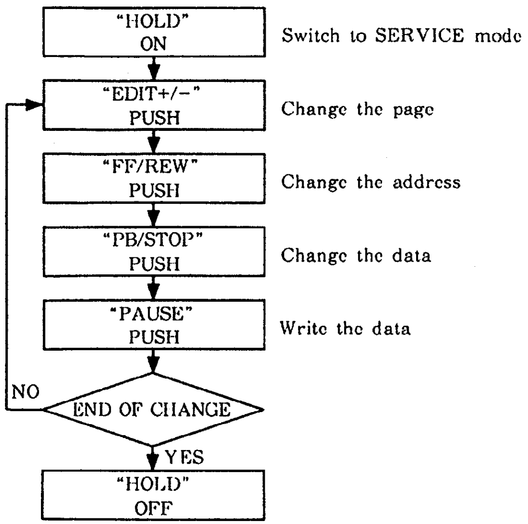

[To input VIDEO signal to the AEP, UK model]

Input VIDEO signal to pin ⑨ of the land for S201 on the VA-67 board.
(GND for J201 VIDEO output terminal should be used for grounding.)

CD-65 (CCD IMAGER), VC-99 (CAMERA PROCESS, ZOOM/FOCUS) SCHEMATIC DIAGRAM

—Ref. No. CD-65 and VC-99 BOARDS: 1000 series—

• Signal path

	VIDEO Signal		
	CHROMA	Y	Y/CHROMA
REC	➡	➡➡	➡➡➡

Be sure to always read "Precautions for replacement of CCD imager block" in page 93 when replacing the CD-65 board, complete, DT-77 board, complete and CCD imager block (IC101 on the CD-65 board and IC001 on the DT-77 board).

Note: The components identified by mark ⚠ or dotted line with mark ⚠ are critical for safety. Replace only with part number specified.

(See page 98.)

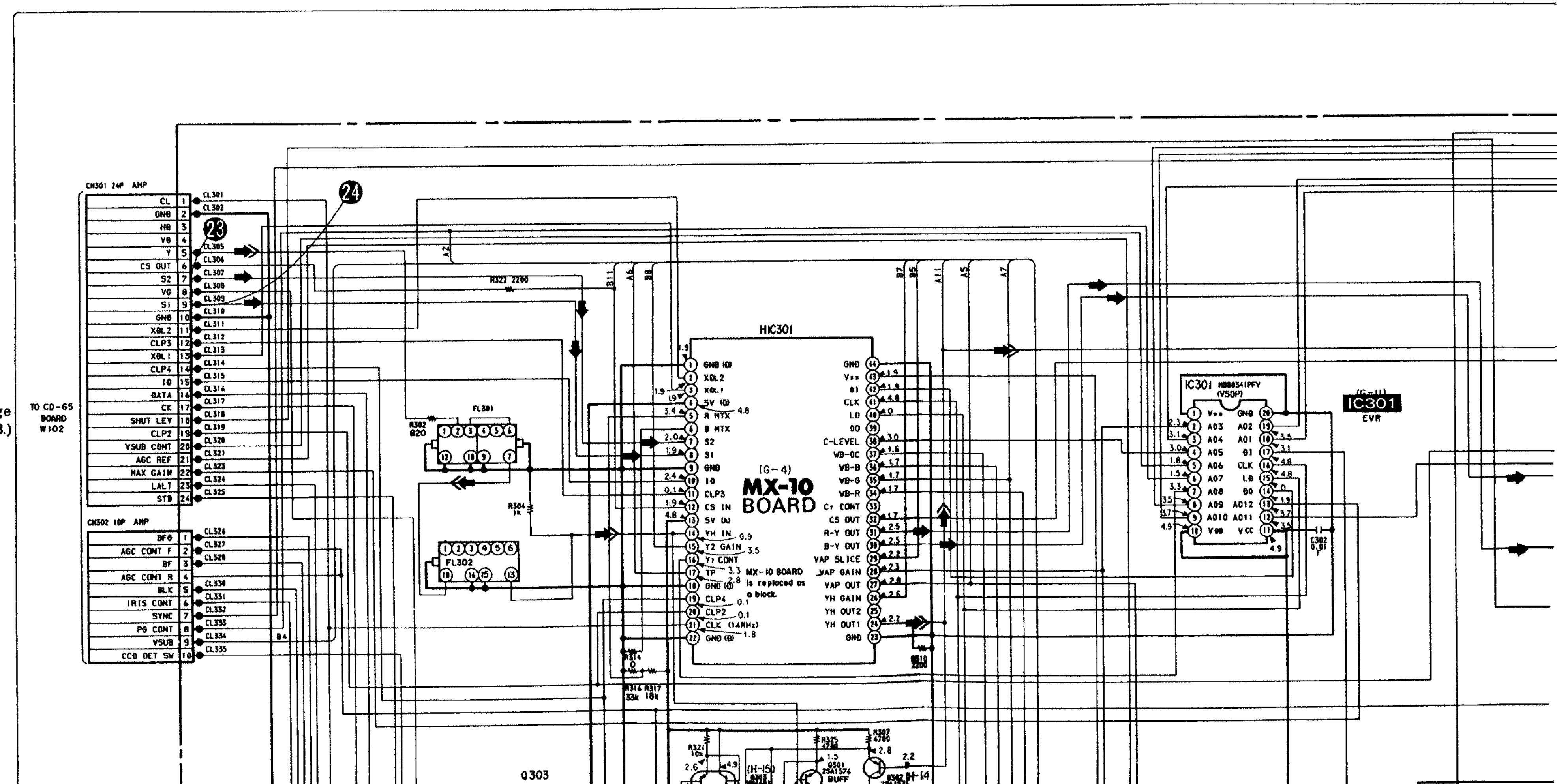

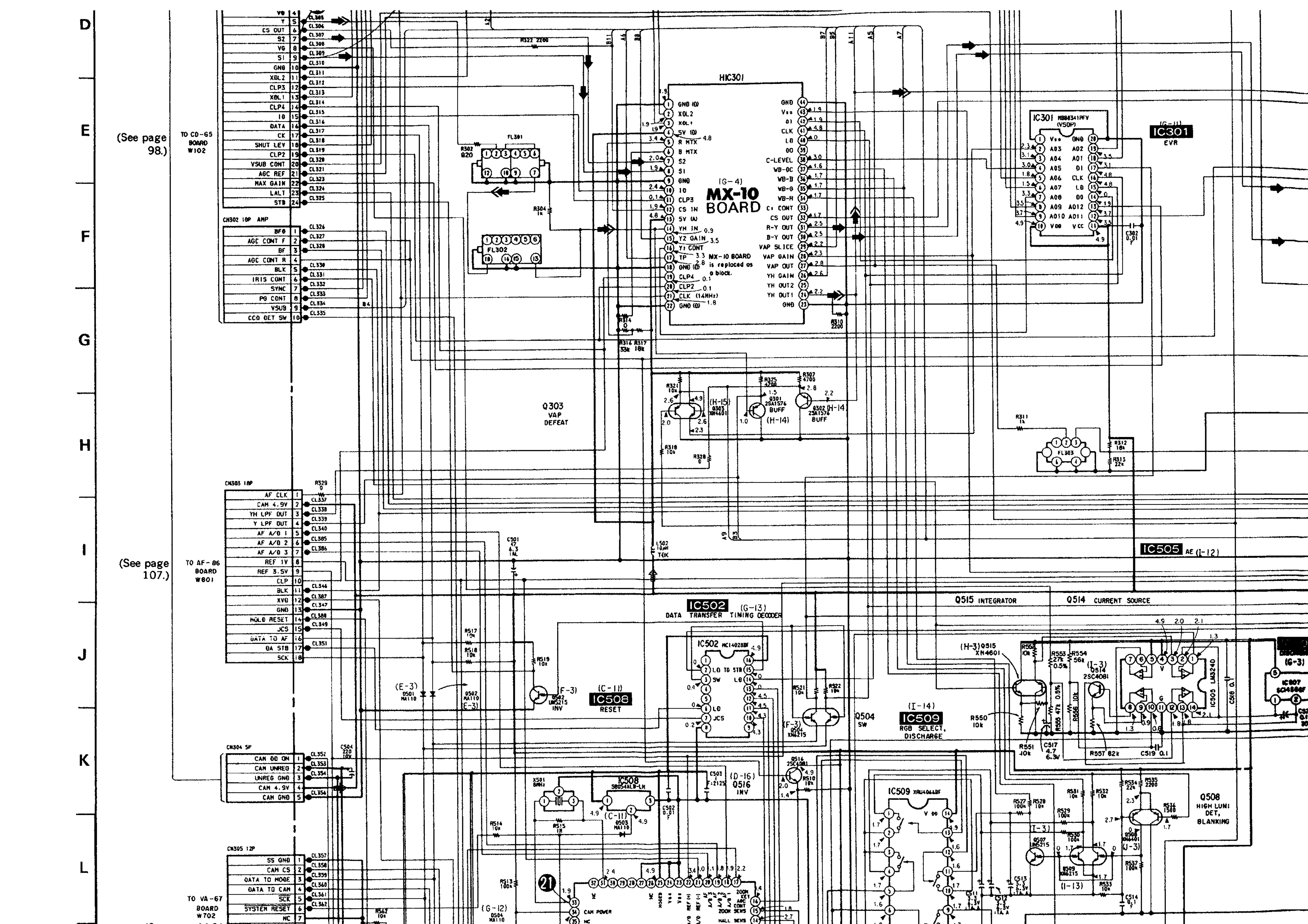
D
E
F
G
H
I
J
K
L
(See page 98.)
TO CD-65 BOARD W102
(See page 107.)
TO AF-86 BOARD W801
TO VA-67 BOARD W702
CN302 10P AMP
CN303 18P
CN304 5P
CN305 12P
HIC301
(G-4)
MX-10 BOARD
MX-10 BOARD is replaced as a block.
IC301
(G-11)
IC301
EVR
FL301
FL302
FL303
Q303 VAP DEFEAT
Q301 2SA1576 BUFF (H-14)
Q302 2SA1576 BUFF (H-14)
Q303 XN4601 (H-15)
IC505 AE (I-12)
Q515 INTEGRATOR
Q514 CURRENT SOURCE
IC502 (G-13)
DATA TRANSFER TIMING DECODER
IC502 MC14028BF
(C-11)
IC508
RESET
IC508 S8054ALB-LH
(I-14)
IC509
RGB SELECT, DISCHARGE
IC509 XRU4066BF
Q504 SW
Q502 UN5215 INV
Q516 2SC4081 INV (D-16)
Q508 HIGH LUMI DET, BLANKING
(H-3) Q515 XN4601
(I-3) Q514 2SC4081
IC505 LM3240
CAM POWER
ZOOM SENS
HALL SENS
21

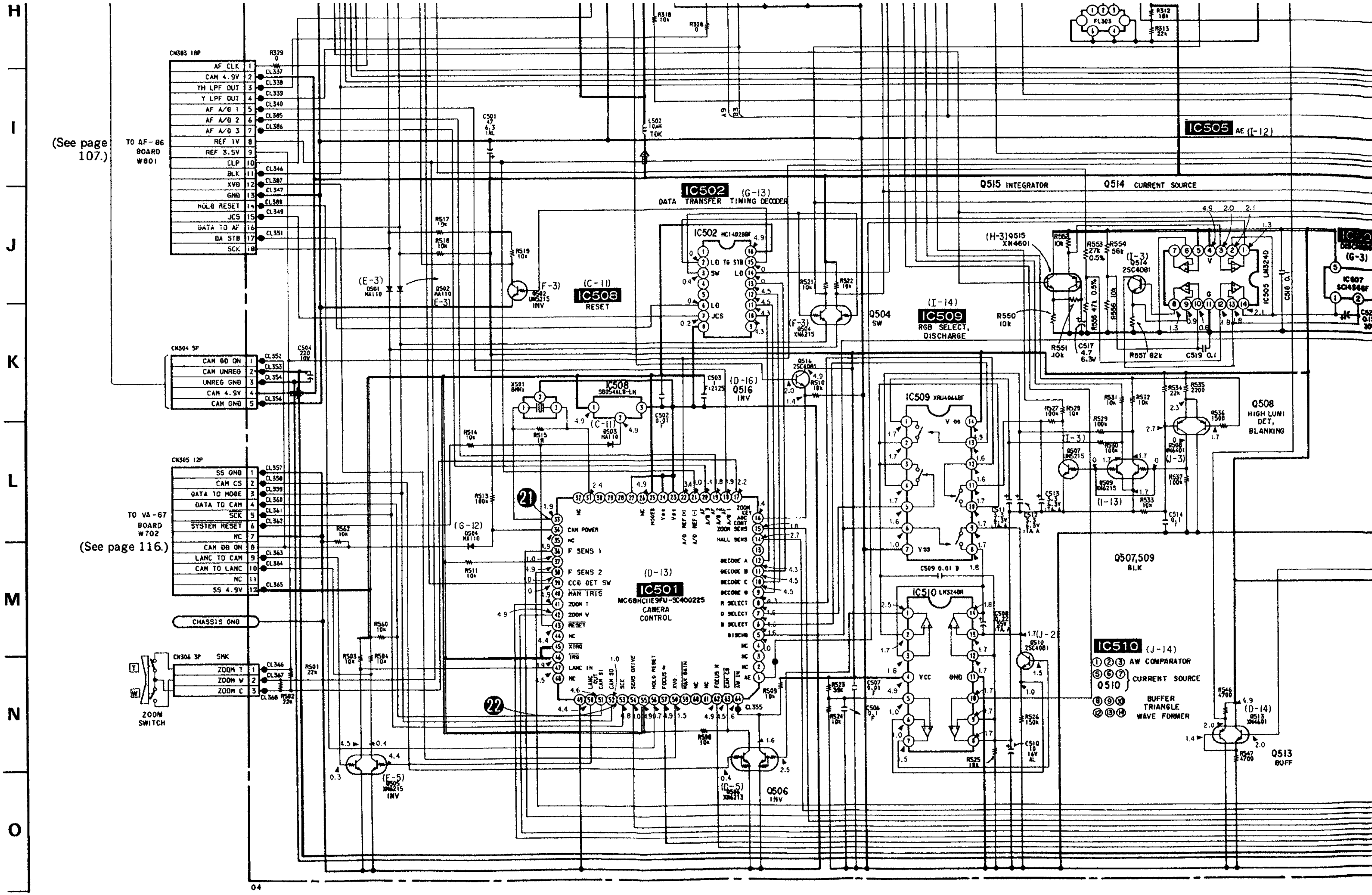
(See page 107.)
TO AF-86 BOARD W801
CN303 18P
AF CLK
CAM 4.9V
YH LPF OUT
Y LPF OUT
AF A/D 1
AF A/D 2
AF A/D 3
REF 1V
REF 3.5V
CLP
BLK
XVD
GND
HOLD RESET
JCS
DATA TO AF
DA STB
SCK
CN304 5P
CAM DD ON
CAM UNREG
UNREG GND
CAM 4.9V
CAM GND
TO VA-67 BOARD W702
(See page 116.)
CN305 12P
SS GND
CAM CS
DATA TO MODE
DATA TO CAM
SCK
SYSTEM RESET
NC
CAM DD ON
LANC TO CAM
CAM TO LANC
NC
SS 4.9V
CHASSIS GND
CN306 3P
ZOOM T
ZOOM W
ZOOM C
ZOOM SWITCH
IC502 (G-13)
DATA TRANSFER TIMING DECODER
IC508 (C-11)
RESET
IC509 (I-14)
RGB SELECT, DISCHARGE
IC505 AE (I-12)
Q515 INTEGRATOR
Q514 CURRENT SOURCE
Q504 SW
Q516 INV
IC501 (D-13)
MC68HC11E9FU-SC400225
CAMERA CONTROL
Q508 HIGH LUMI DET, BLANKING
Q507,509 BLK
IC510 (J-14)
①②③ AW COMPARATOR
⑤⑥⑦ Q510 CURRENT SOURCE
⑧⑨⑩ ⑫⑬⑭ BUFFER TRIANGLE WAVE FORMER
Q513 BUFF
Q505 INV
Q506 INV

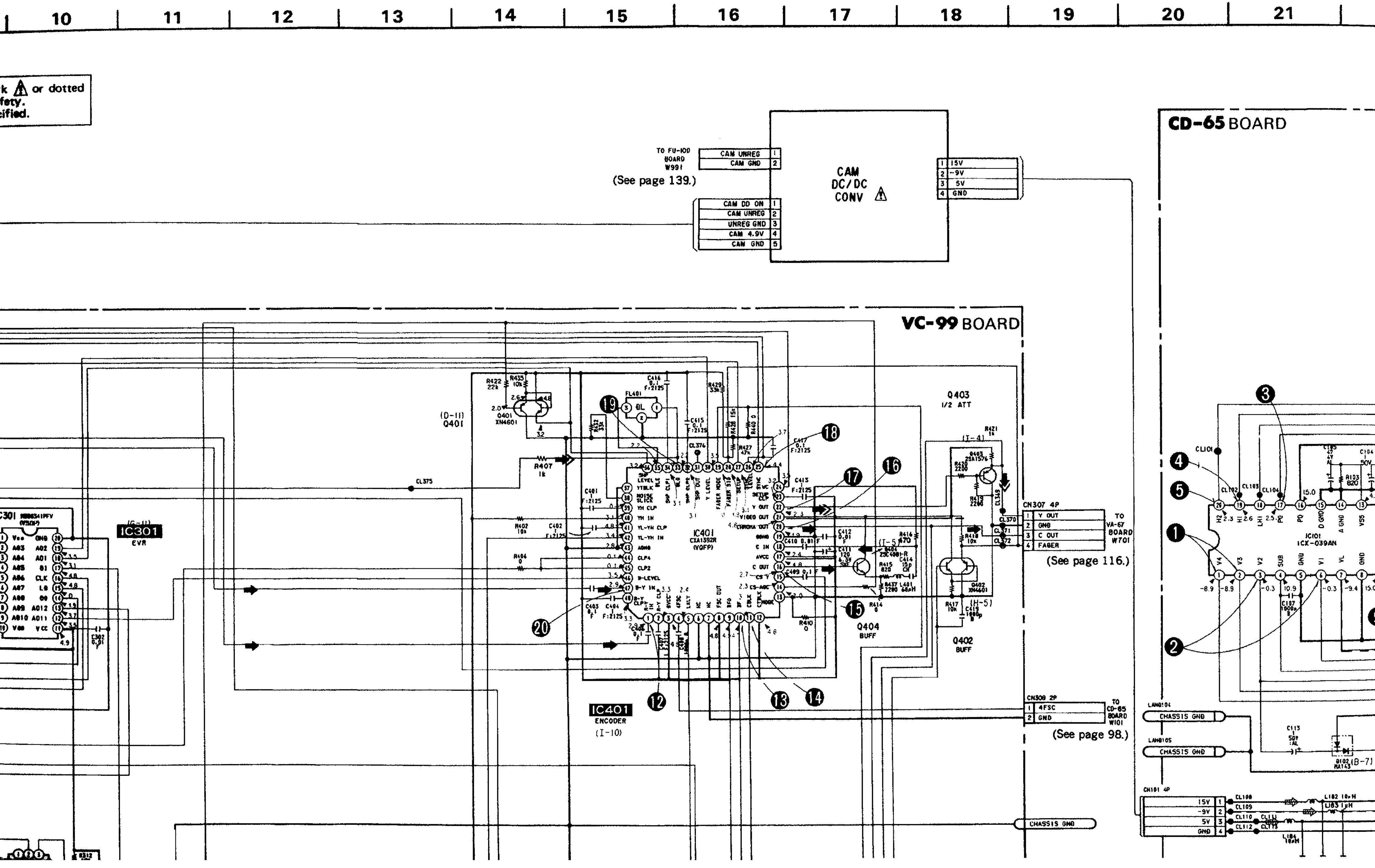

10 11 12 13 14 15 16 17 18 19 20 21
k or dotted
fety.
cified.
TO FU-100 BOARD W991
(See page 139.)
CAM UNREG
CAM GND
CAM DD ON
CAM UNREG
UNREG GND
CAM 4.9V
CAM GND
CAM DC/DC CONV
15V
-9V
5V
GND
CD-65 BOARD
VC-99 BOARD
Q403 1/2 ATT
Q404 BUFF
Q402 BUFF
IC401 CXA1392R (VQFP)
IC401 ENCODER (I-10)
IC301 EVR
(D-11) Q401
CN307 4P
Y OUT
GND
C OUT
FADER
TO VA-67 BOARD W701
(See page 116.)
CN308 2P
4FSC
GND
TO CD-65 BOARD W101
(See page 98.)
CHASSIS GND
IC101 ICX-039AN
CN101 4P

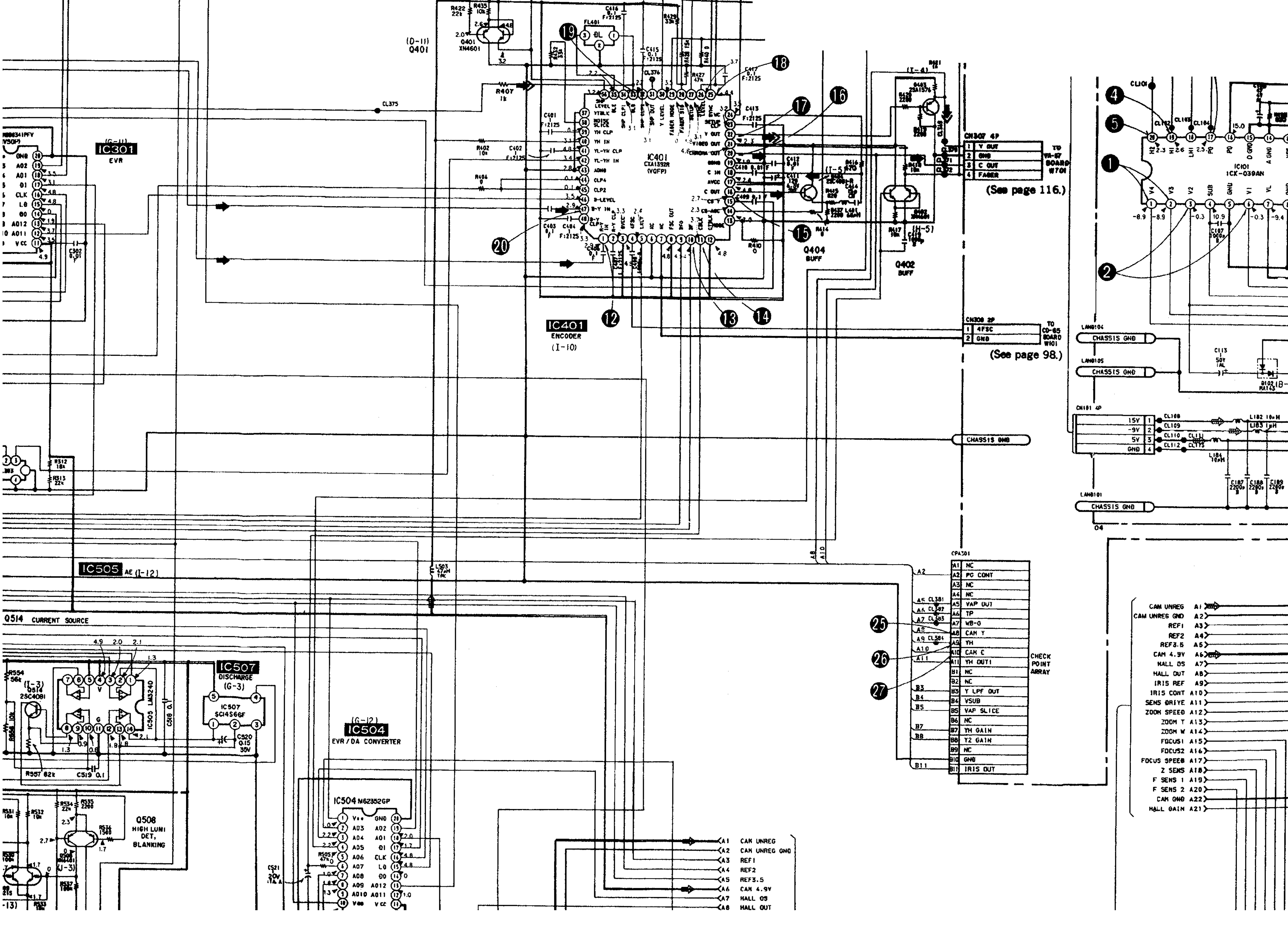

IC301 EVR (G-11)
(D-11) Q401
Q401 XN4601
R407 1k
IC401 CXA1392R (VQFP)
IC401 ENCODER (I-10)
Q404 BUFF
Q402 BUFF
CN307 4P
1 Y OUT
2 GND
3 C OUT
4 FADER
TO VA-67 BOARD W701
(See page 116.)
CN308 2P
1 4FSC
2 GND
TO CD-65 BOARD W101
(See page 98.)
IC101 ICX-039AN
CHASSIS GND
CN101 4P
15V
-9V
5V
GND
IC505 AE (I-12)
Q514 CURRENT SOURCE
IC507 DISCHARGE (G-3)
IC507 SC14S66F
IC505 LM3240
(G-12) IC504 EVR/DA CONVERTER
IC504 M62352GP
Q508 HIGH LUMI DET, BLANKING
CPA301
A1 NC
A2 PC CONT
A3 NC
A4 NC
A5 VAP OUT
A6 TP
A7 WB-G
A8 CAM Y
A9 YH
A10 CAM C
A11 YH OUT1
B1 NC
B2 NC
B3 Y LPF OUT
B4 VSUB
B5 VAP SLICE
B6 NC
B7 YH GAIN
B8 Y2 GAIN
B9 NC
B10 GND
B11 IRIS OUT
CHECK POINT ARRAY
CAM UNREG A1
CAM UNREG GND A2
REF1 A3
REF2 A4
REF3.5 A5
CAM 4.9V A6
HALL OS A7
HALL OUT A8
IRIS REF A9
IRIS CONT A10
SENS DRIVE A11
ZOOM SPEED A12
ZOOM T A13
ZOOM W A14
FOCUS1 A15
FOCUS2 A16
FOCUS SPEED A17
Z SENS A18
F SENS 1 A19
F SENS 2 A20
CAM GND A22
HALL GAIN A21
A1 CAM UNREG
A2 CAM UNREG GND
A3 REF1
A4 REF2
A5 REF3.5
A6 CAM 4.9V
A7 HALL OS
A8 HALL OUT

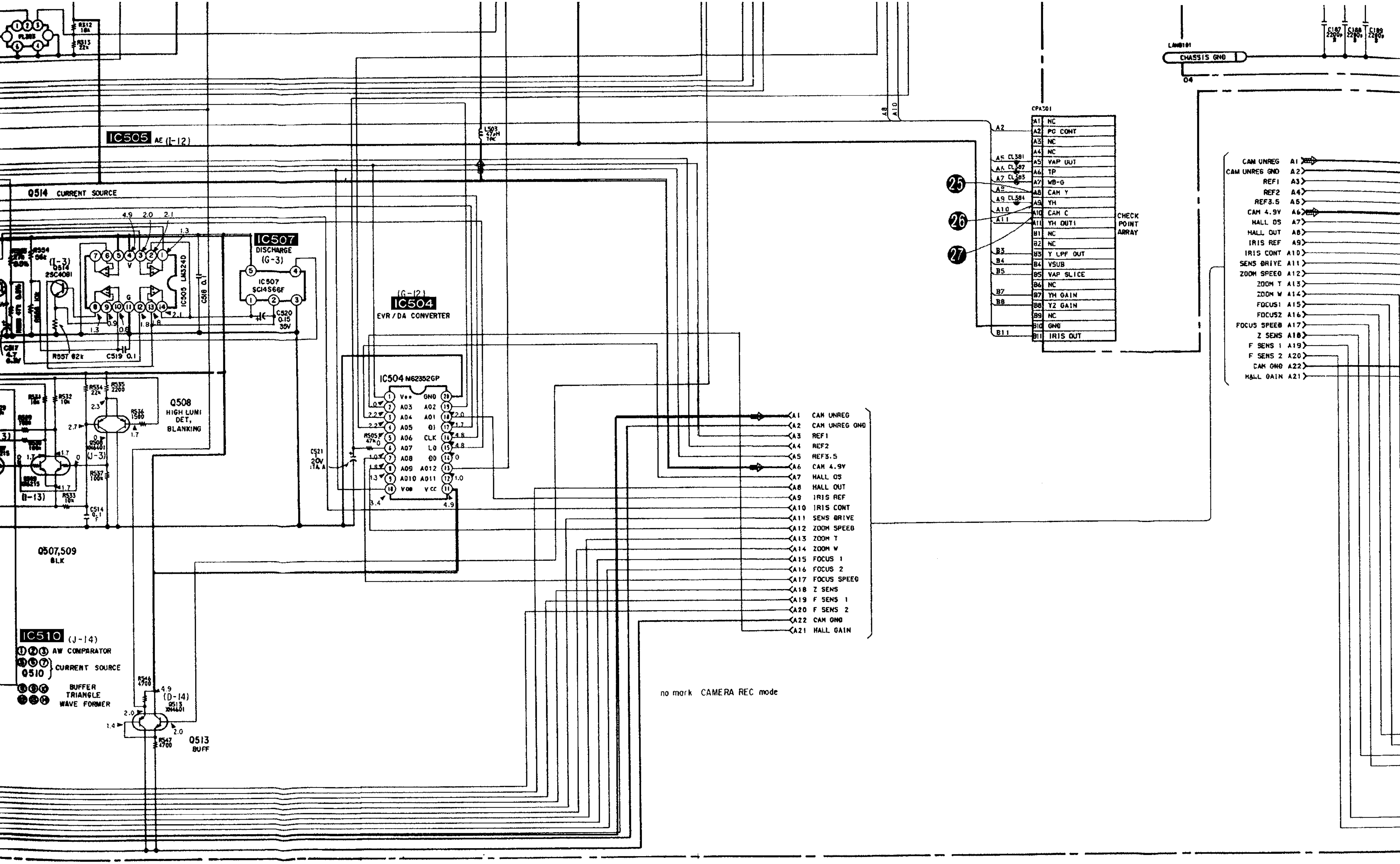

CAMERA (1) **CAMERA (1)**

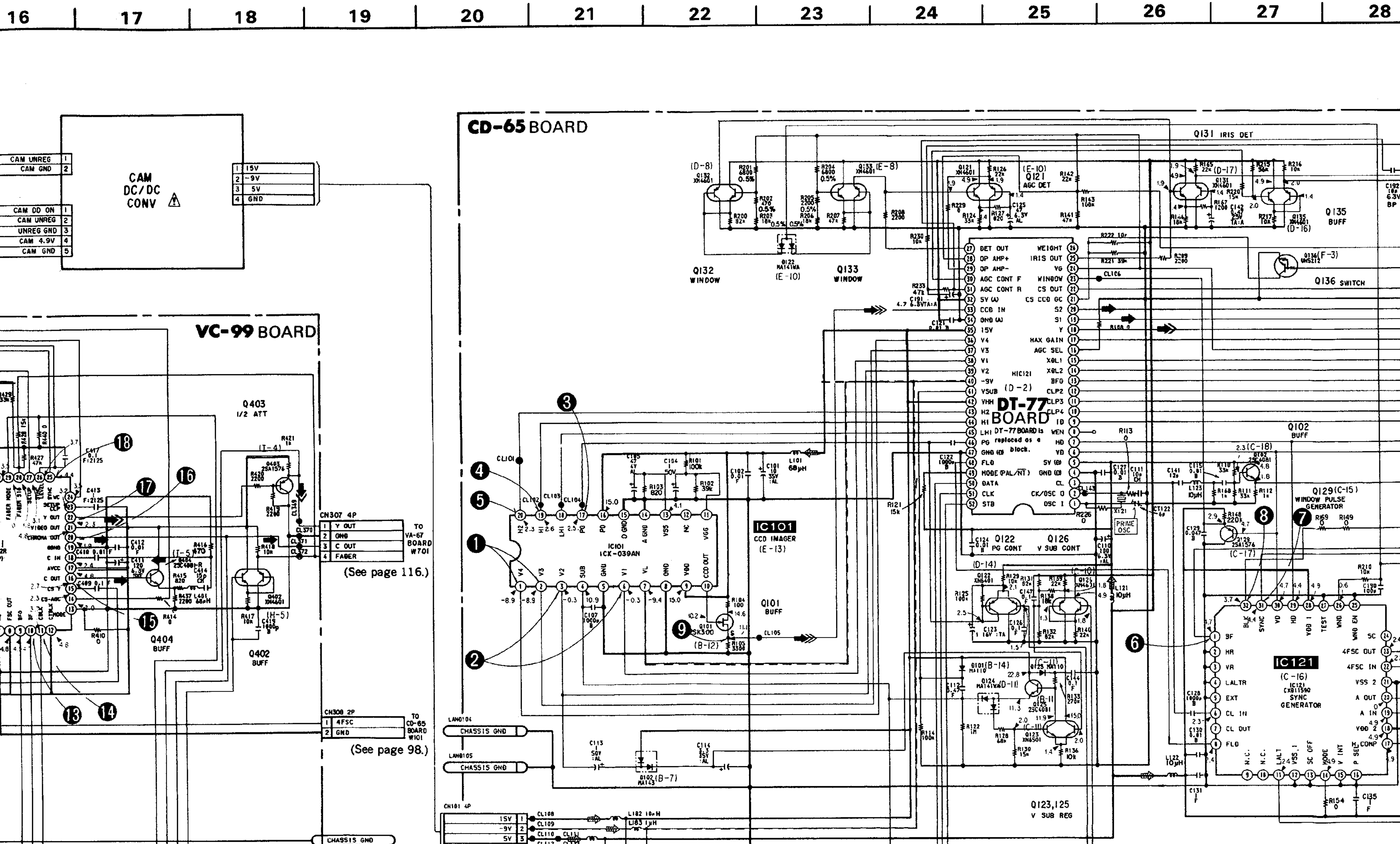

16
17
18
19
20
21
22
23
24
25
26
27
28
CAM DC/DC CONV
CAM UNREG
CAM GND
CAM DD ON
UNREG GND
CAM 4.9V
15V
-9V
5V
GND
VC-99 BOARD
Q403 1/2 ATT
Q404 BUFF
Q402 BUFF
CN307 4P
Y OUT
GND
C OUT
FADER
TO VA-67 BOARD W701
(See page 116.)
CN308 2P
4FSC
TO CD-65 BOARD W101
(See page 98.)
CHASSIS GND
CD-65 BOARD
Q131 IRIS DET
Q121 AGC DET
Q132 WINDOW
Q133 WINDOW
Q135 BUFF
Q136 SWITCH
DT-77 BOARD
DT-77 BOARD is replaced as a block.
IC101
CCD IMAGER
ICX-039AN
Q101 BUFF
Q102 BUFF
Q122 PG CONT
Q126 V SUB CONT
Q129 WINDOW PULSE GENERATOR
PRIME OSC
IC121
CX811590
SYNC GENERATOR
Q123,125 V SUB REG
CN101 4P

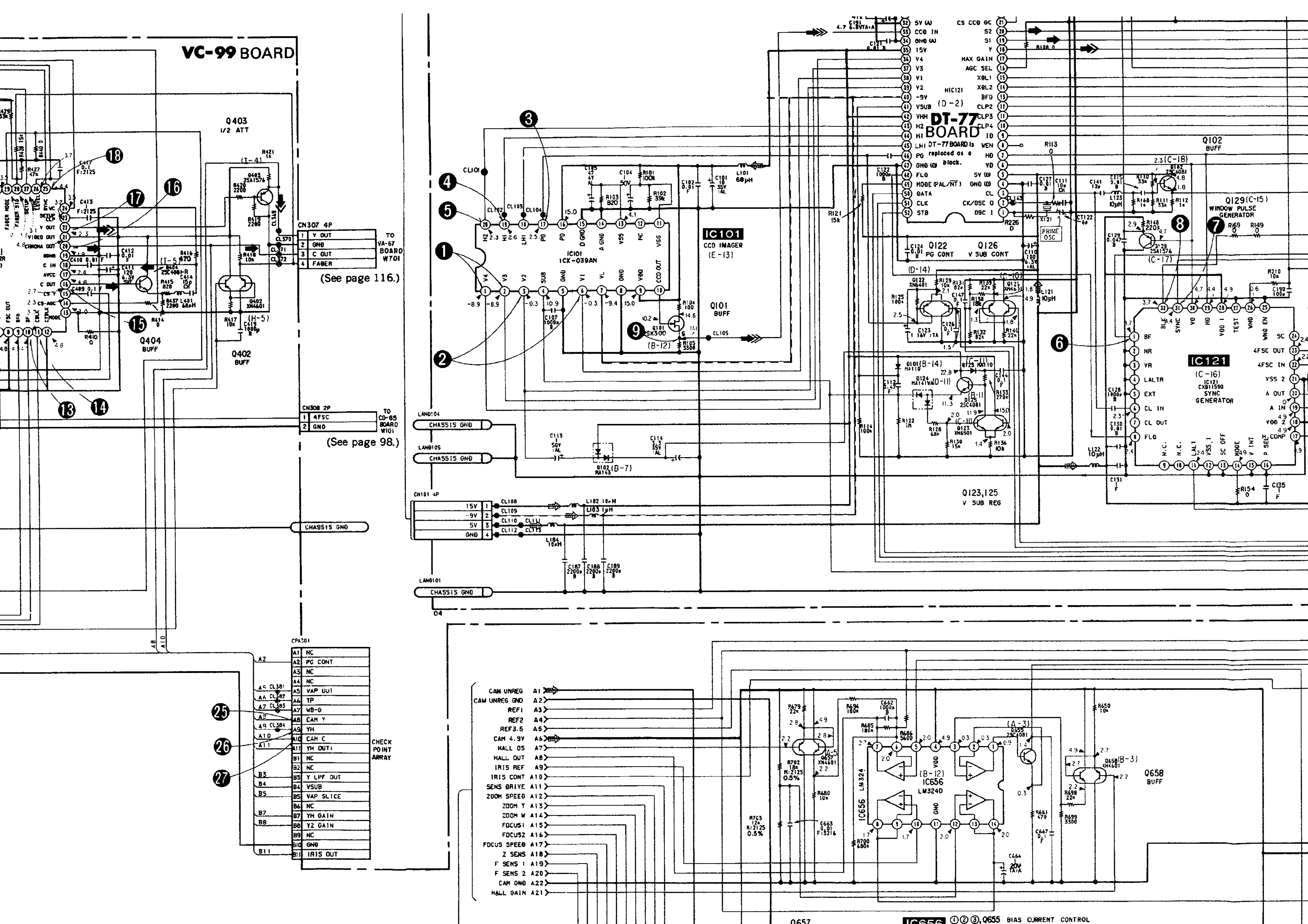
VC-99 BOARD
Q403
1/2 ATT
Q404
BUFF
Q402
BUFF
CN307 4P
Y OUT
GND
C OUT
FADER
TO VA-67 BOARD W701
(See page 116.)
CN308 2P
4FSC
GND
TO CD-65 BOARD W101
(See page 98.)
CHASSIS GND
CPA301
NC
PG CONT
VAP OUT
TP
WB-G
CAM Y
YH
CAM C
YH OUT1
Y LPF OUT
VSUB
VAP SLICE
YH GAIN
Y2 GAIN
IRIS OUT
CHECK POINT ARRAY
DT-77 BOARD
DT-77 BOARD is replaced as a block.
HIC121
(D-2)
IC101
CCD IMAGER
(E-13)
ICX-039AN
Q101
BUFF
Q122
PG CONT
Q126
V SUB CONT
Q123,125
V SUB REG
Q102
BUFF
Q129(C-15)
WINDOW PULSE GENERATOR
IC121
(C-16)
CXD1159Q
SYNC GENERATOR
PRIME OSC
CN101 4P
15V
-9V
5V
GND
CAM UNREG
CAM UNREG GND
REF1
REF2
REF3.5
CAM 4.9V
HALL OS
HALL OUT
IRIS REF
IRIS CONT
SENS DRIVE
ZOOM SPEED
ZOOM T
ZOOM W
FOCUS1
FOCUS2
FOCUS SPEED
Z SENS
F SENS 1
F SENS 2
CAM GND
HALL GAIN
IC656
LM324D
(B-12)
Q658
BUFF
IC656 ①②③,Q655 BIAS CURRENT CONTROL

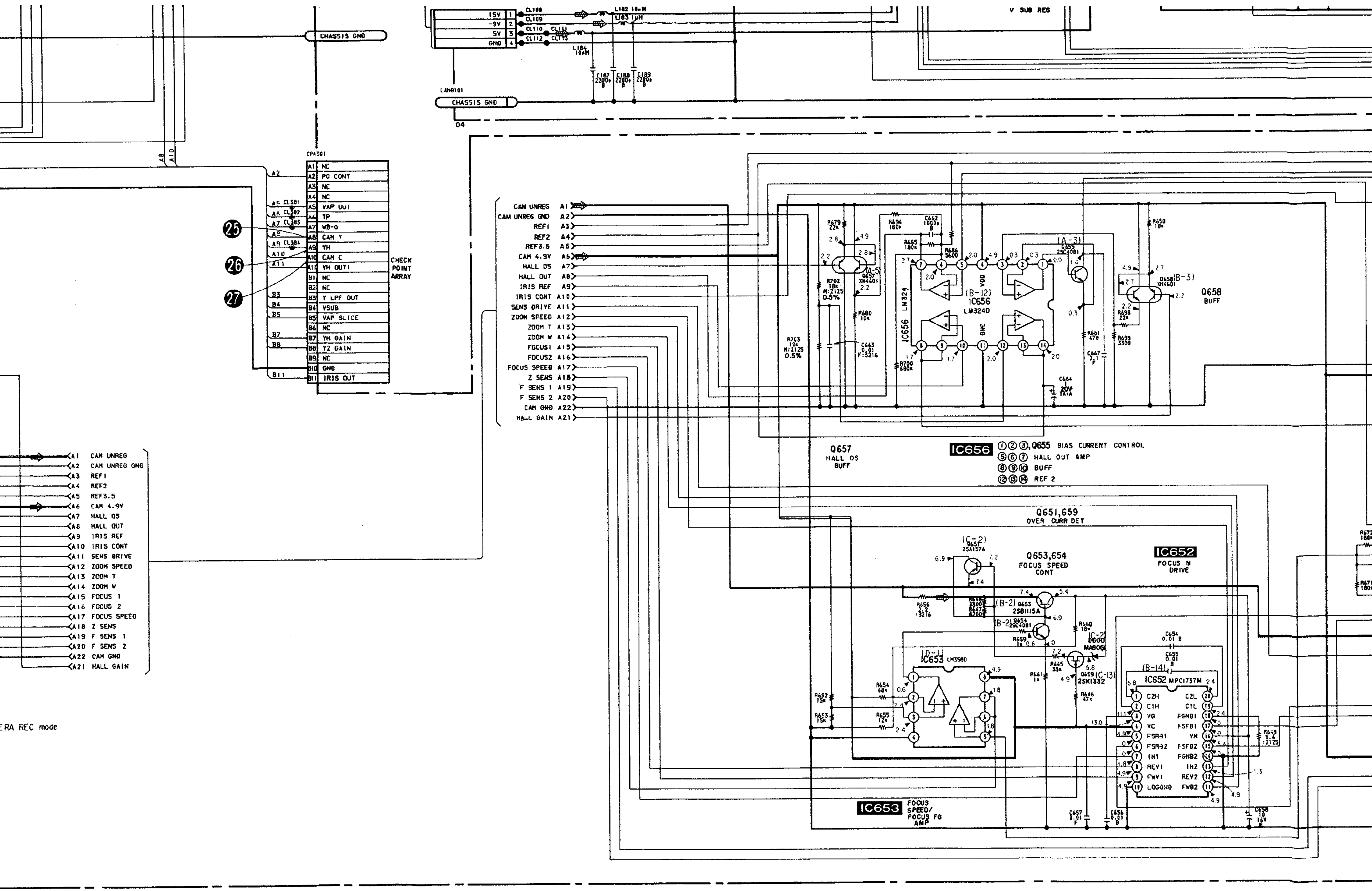

CHASSIS GND
15V
-9V
5V
GND
V SUB REG
CPA301
CHECK POINT ARRAY
NC
PG CONT
VAP OUT
TP
WB-G
CAM Y
YH
CAM C
YH OUT1
Y LPF OUT
VSUB
VAP SLICE
YH GAIN
Y2 GAIN
IRIS OUT
CAM UNREG
CAM UNREG GND
REF1
REF2
REF3.5
CAM 4.9V
HALL OS
HALL OUT
IRIS REF
IRIS CONT
SENS DRIVE
ZOOM SPEED
ZOOM T
ZOOM W
FOCUS1
FOCUS2
FOCUS SPEED
Z SENS
F SENS 1
F SENS 2
CAM GND
HALL GAIN
IC656 LM324D
Q657 HALL OS BUFF
Q658 BUFF
IC656 ①②③,Q655 BIAS CURRENT CONTROL
⑤⑥⑦ HALL OUT AMP
⑧⑨⑩ BUFF
⑫⑬⑭ REF 2
Q651,659 OVER CURR DET
Q653,654 FOCUS SPEED CONT
IC652 FOCUS M DRIVE
IC652 MPC1737M
IC653 LM358D
IC653 FOCUS SPEED/ FOCUS FG AMP
ERA REC mode

CAMERA (1) CAM

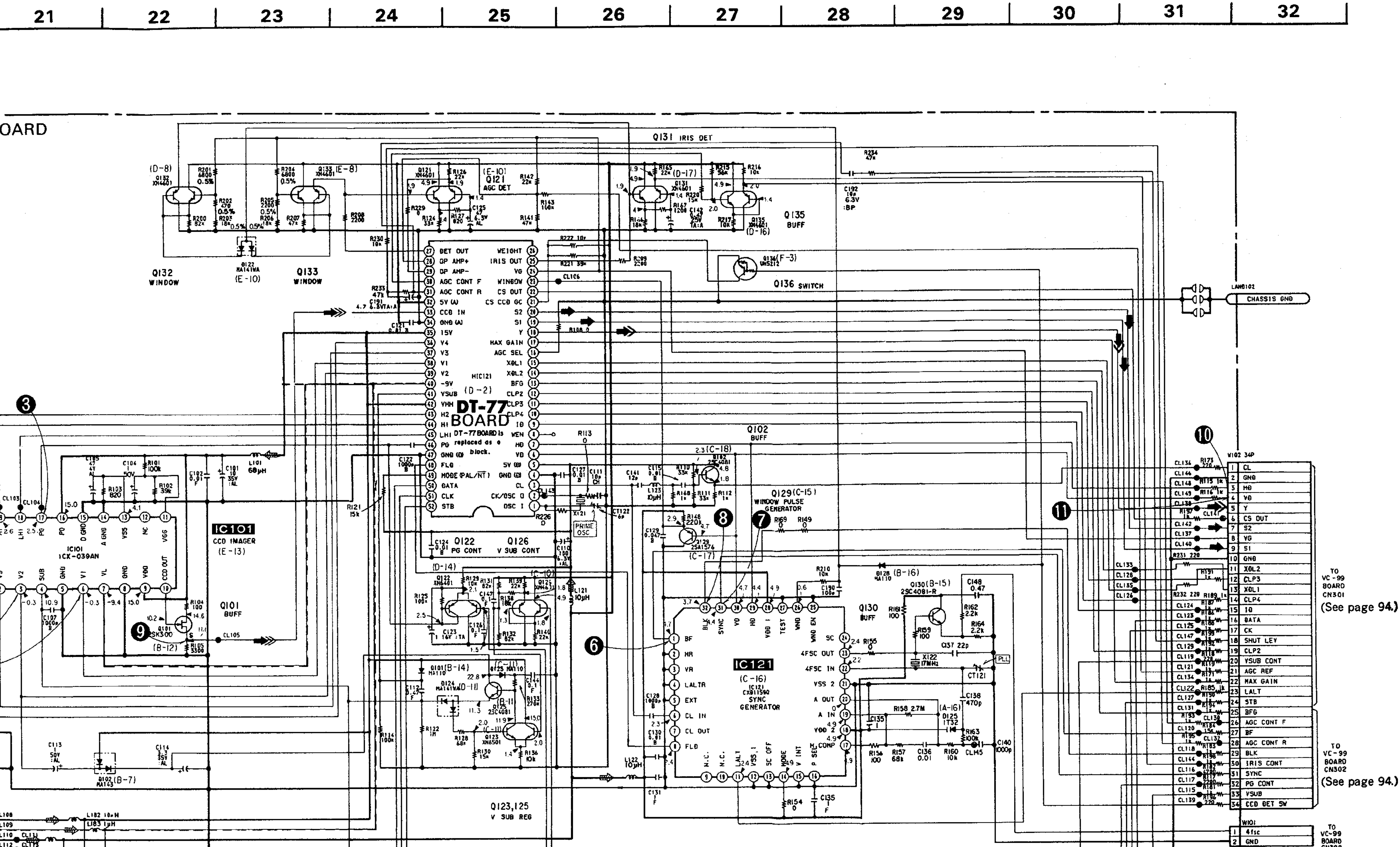
21
22
23
24
25
26
27
28
29
30
31
32
OARD
Q131 IRIS DET
Q132 WINDOW
Q133 WINDOW
Q121 AGC DET
Q135 BUFF
Q136 SWITCH
DT-77 BOARD
DT-77 BOARD is replaced as a block.
HIC121 (D-2)
DET OUT
OP AMP+
OP AMP-
AGC CONT F
AGC CONT R
5V (A)
CCD IN
GND (A)
15V
V4
V3
V1
V2
-9V
VSUB
VHH
H2
H1
LH1
PG
GND (D)
FLD
MODE (PAL/NT)
DATA
CLK
STB
WEIGHT
IRIS OUT
VG
WINDOW
CS OUT
CS CCD GC
S2
S1
Y
MAX GAIN
AGC SEL
XDL1
XDL2
BFG
CLP2
CLP3
CLP4
ID
WEN
HD
VD
5V (D)
GND (D)
CL
CK/OSC O
OSC I
PRIME OSC
IC101 CCD IMAGER (E-13)
IC101 ICX-039AN
Q101 BUFF
Q122 PG CONT
Q126 V SUB CONT
Q123,125 V SUB REG
Q102 BUFF
Q129 (C-15) WINDOW PULSE GENERATOR
Q130 BUFF
IC121 (C-16) CXD1159Q SYNC GENERATOR
BF
HR
VR
LALTR
EXT
CL IN
CL OUT
FLD
SC
4FSC OUT
4FSC IN
VSS 2
A OUT
A IN
VDD 2
H.COMP
BLK
SYNC
VD
HD
VDD I
TEST
WND EN
N.C.
ALT
VSS 1
SC OFF
MODE
V INT
P SEL
LAN0102 CHASSIS GND
VI02 34P
1 CL
2 GND
3 HD
4 VD
5 Y
6 CS OUT
7 S2
8 VG
9 S1
10 GND
11 XDL2
12 CLP3
13 XDL1
14 CLP4
15 ID
16 DATA
17 CK
18 SHUT LEV
19 CLP2
20 YSUB CONT
21 AGC REF
22 MAX GAIN
23 LALT
24 STB
25 BFG
26 AGC CONT F
27 BF
28 AGC CONT R
29 BLK
30 IRIS CONT
31 SYNC
32 PG CONT
33 VSUB
34 CCD DET SW
TO VC-99 BOARD CN301 (See page 94.)
TO VC-99 BOARD CN302 (See page 94.)
WI01
1 4fsc
2 GND
TO VC-99 BOARD

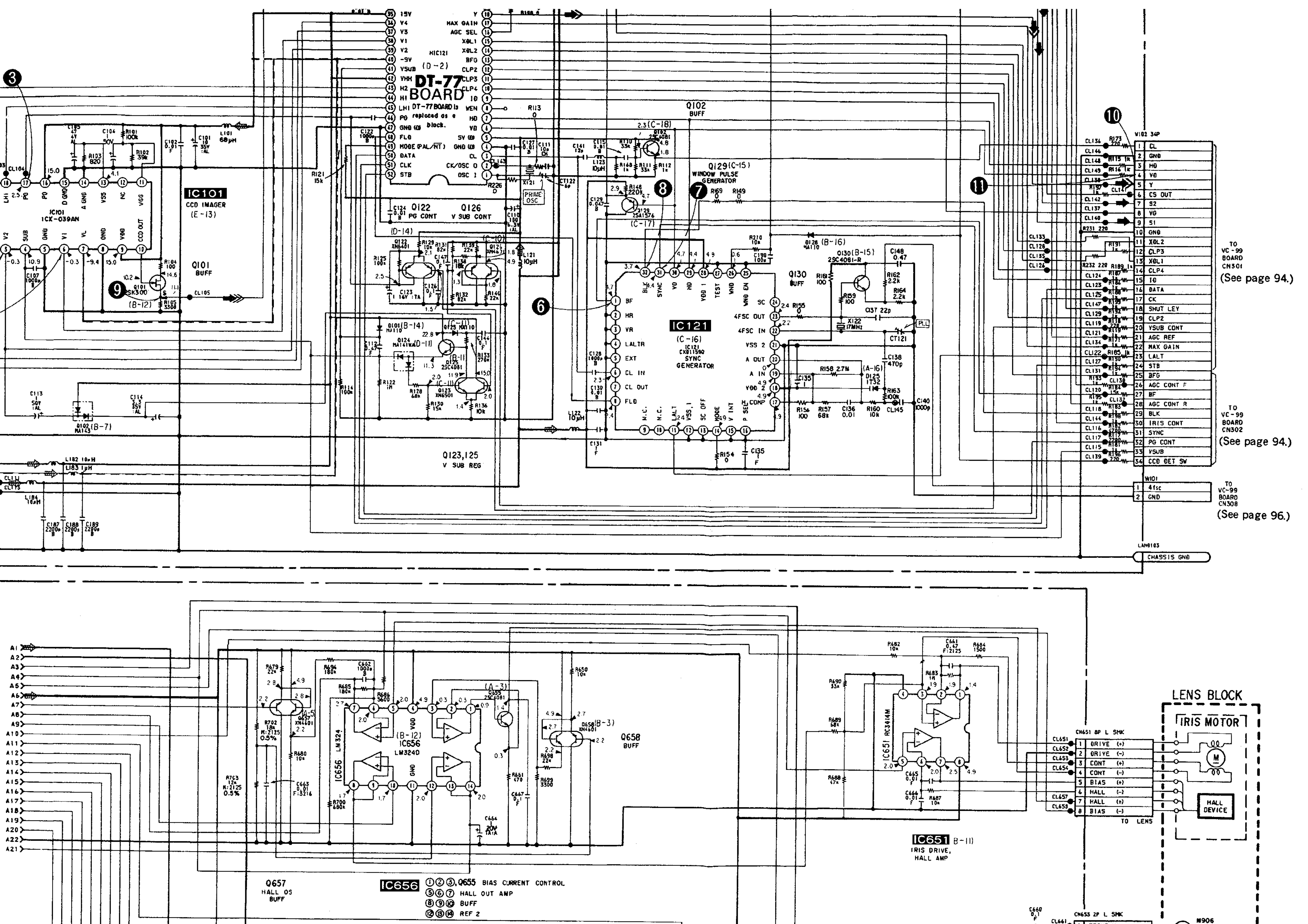

DT-77 BOARD
DT-77 BOARD is replaced as a block.
HIC121 (D-2)
IC101 CCD IMAGER (E-13)
IC101 ICX-039AN
Q101 BUFF
Q102 BUFF
Q122 PG CONT
Q126 V SUB CONT
Q123,125 V SUB REG
Q129 (C-15) WINDOW PULSE GENERATOR
Q130 BUFF
IC121 (C-16) CXD1159Q SYNC GENERATOR
PRIME OSC
V102 34P
TO VC-99 BOARD CN301
(See page 94.)
TO VC-99 BOARD CN302
(See page 94.)
W101
TO VC-99 BOARD CN308
(See page 96.)
CHASSIS GND
CL
GND
HD
VD
Y
CS OUT
S2
VG
S1
GND
XDL2
CLP3
XDL1
CLP4
ID
DATA
CK
SHUT LEY
CLP2
VSUB CONT
AGC REF
MAX GAIN
LALT
STB
BFG
AGC CONT F
BF
AGC CONT R
BLK
IRIS CONT
SYNC
PG CONT
VSUB
CCD DET SW
4fsc
GND
IC656 (B-12) LM324D
IC651 RC3414M
IC651 B-11) IRIS DRIVE, HALL AMP
Q657 HALL OS BUFF
Q658 BUFF
IC656 ①②③,Q655 BIAS CURRENT CONTROL
⑤⑥⑦ HALL OUT AMP
⑧⑨⑩ BUFF
⑫⑬⑭ REF 2
LENS BLOCK
IRIS MOTOR
HALL DEVICE
CN651 8P L SMK
DRIVE (+)
DRIVE (-)
CONT (+)
CONT (-)
BIAS (+)
HALL (-)
HALL (+)
BIAS (-)
TO LENS
CN653 2P L SMK
M906

(See page 96.)

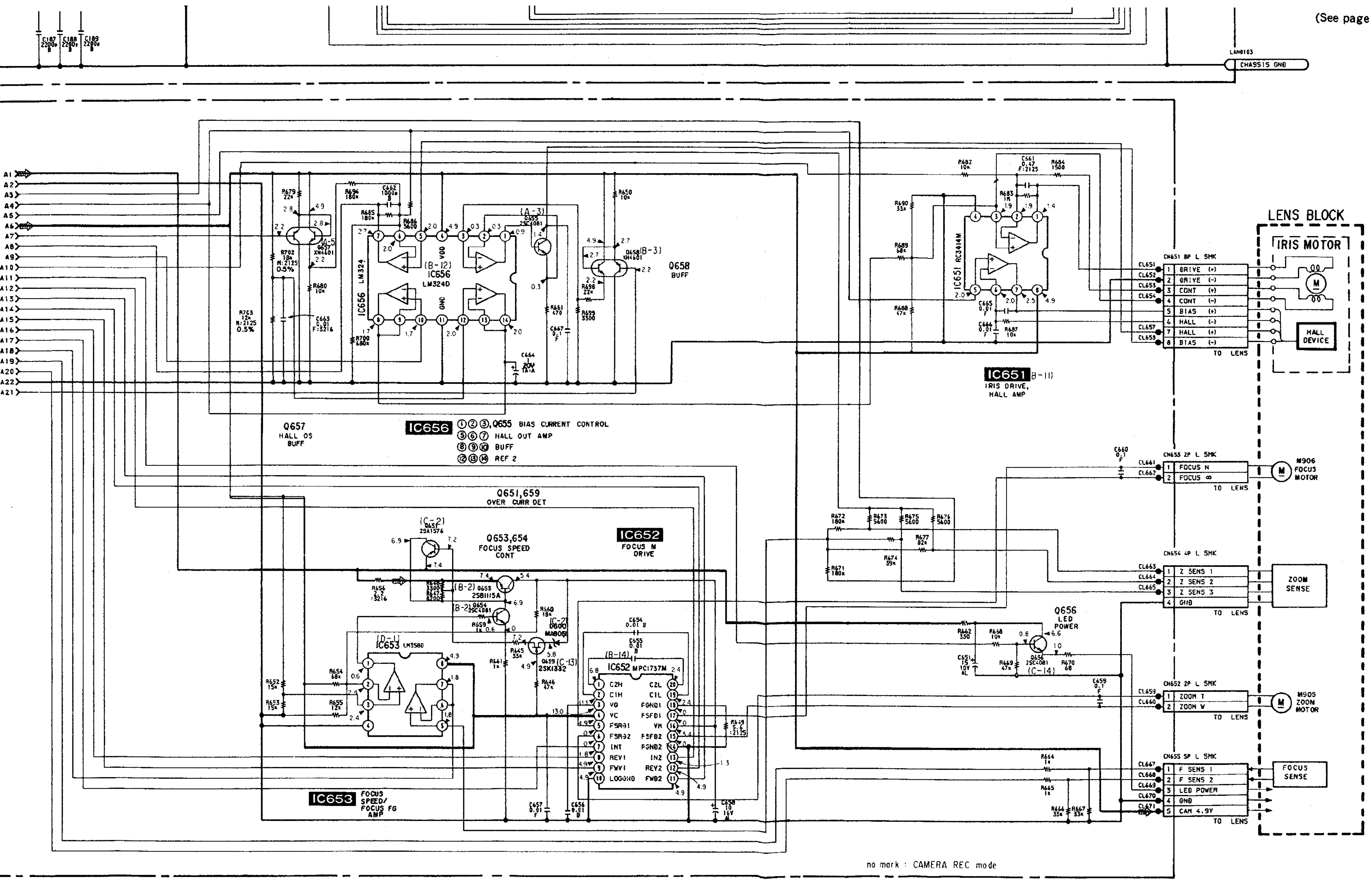

CAMERA (1) CAMERA (1)

CD-65 (CCD IMAGER), VC-99 (CAMERA PROCESS, ZOOM/FOCUS) PRINTED WIRING BOARDS

—Ref. No. CD-65 and VC-99 BOARDS: 1000 series—

VC-99 BOARD (COMPONENT SIDE)

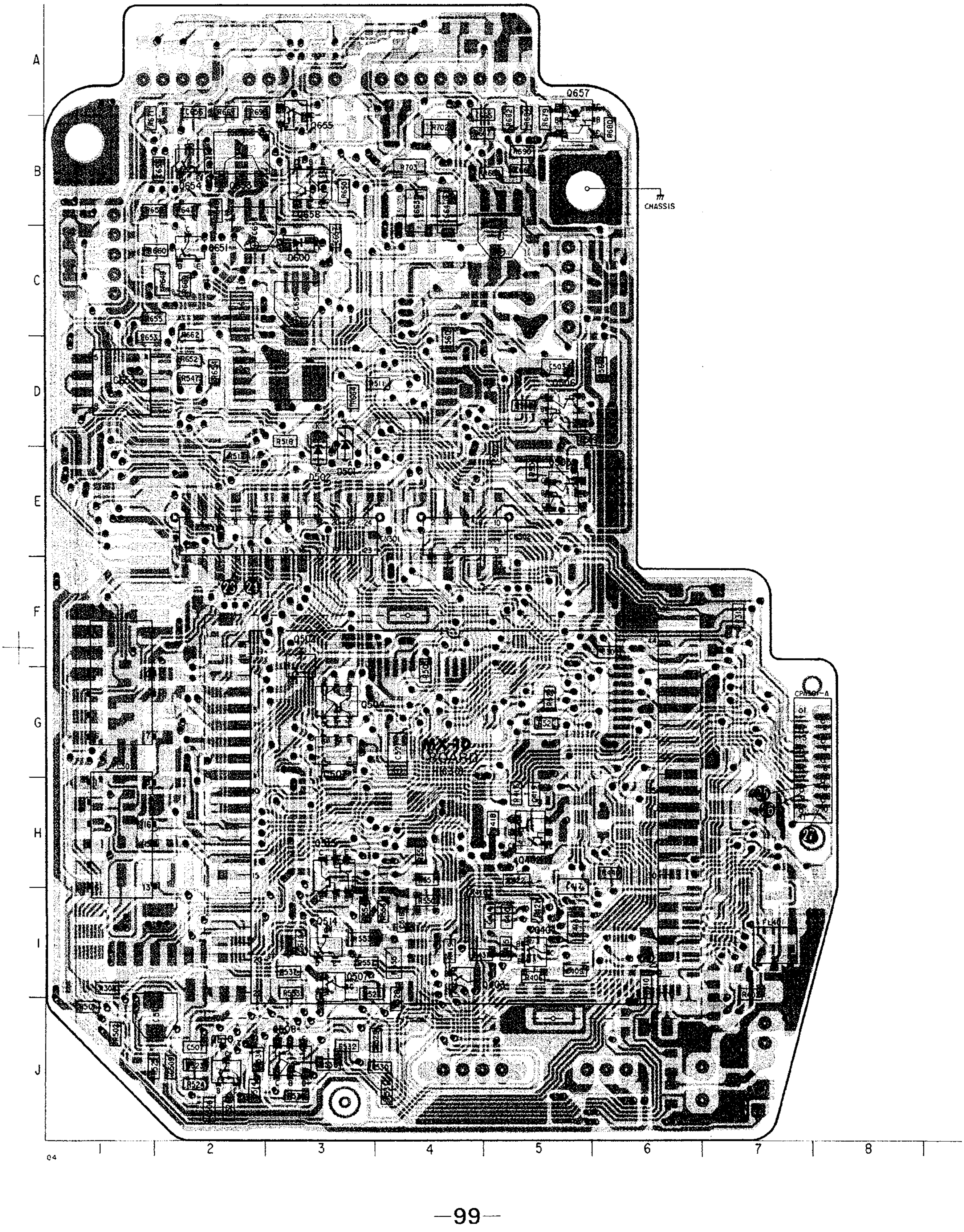

VC-99 BOARD (CONDUCTOR SIDE)

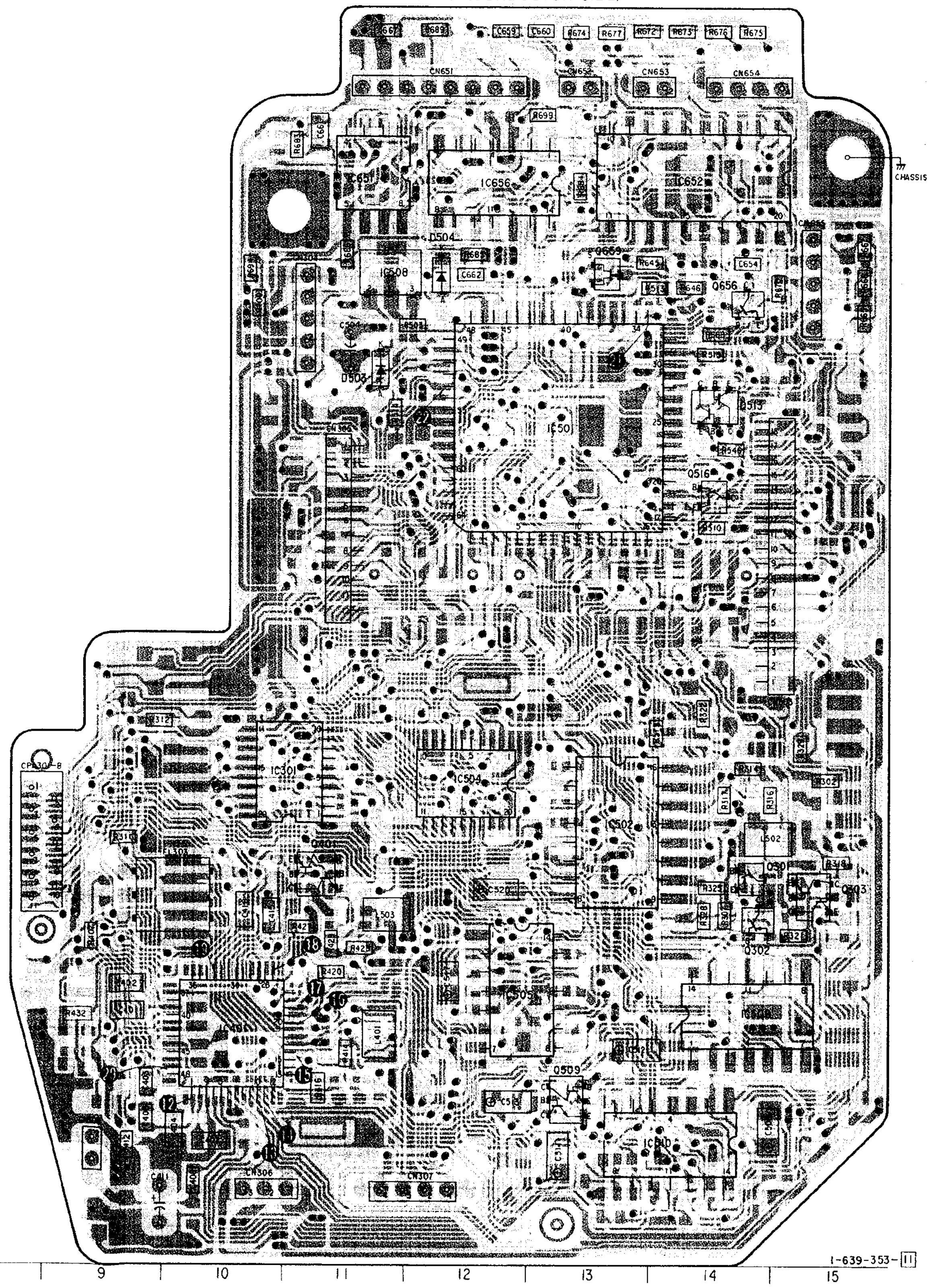

1-639-353-11

8	9	10	11	12	13	14	15

< DIODE >

D501 8-719-404-46 MA110
D502 8-719-404-46 MA110
D503 8-719-404-46 MA110
D504 8-719-404-46 MA110
D600 8-719-420-90 MA8051-M

< IC >

IC301 8-759-946-00 MB88341PFV
IC401 8-752-038-XX CXA1392R
IC501 8-759-038-86 MC68HC11E9FU-SC400225
IC502 8-759-008-95 MC14028BF
IC504 8-759-635-27 M62352GP

IC505 8-759-998-96 LM324D
IC507 8-759-030-74 SC14S66F
IC508 8-759-937-56 S-8054ALB-S
IC509 8-759-509-05 XRU4066BF
IC510 8-759-998-96 LM324D

IC651 8-759-981-82 RC3414M
IC652 8-759-037-20 MPC1737M
IC653 8-759-998-98 LM358D
IC656 8-759-998-96 LM324D

< TRANSISTOR >

Q301 8-729-905-23 2SA1576-R
Q302 8-729-905-23 2SA1576-R
Q303 8-729-402-84 XN4601
Q401 8-729-402-84 XN4601
Q402 8-729-402-84 XN4601

Q403 8-729-905-23 2SA1576-R
Q404 8-729-905-35 2SC4081-R
Q502 8-729-420-50 UN5215
Q504 8-729-403-10 XN6215
Q505 8-729-403-10 XN6215

Q506 8-729-420-07 XN6213
Q507 8-729-420-50 UN5215
Q508 8-729-402-78 XN6401

Q509 8-729-403-10 XN6215
Q510 8-729-905-35 2SC4081-R

Q513 8-729-402-84 XN4601
Q514 8-729-905-35 2SC4081-R
Q515 8-729-402-84 XN4601
Q516 8-729-905-35 2SC4081-R
Q651 8-729-905-23 2SA1576-R

Q653 8-729-106-60 2SB1115A
Q654 8-729-905-35 2SC4081-R
Q655 8-729-905-35 2SC4081-R
Q656 8-729-905-35 2SC4081-R
Q657 8-729-402-84 XN4601

Q658 8-729-402-84 XN4601
Q659 8-729-821-88 2SK1332-3

CD-65 BOARD (COMPONENT SIDE)

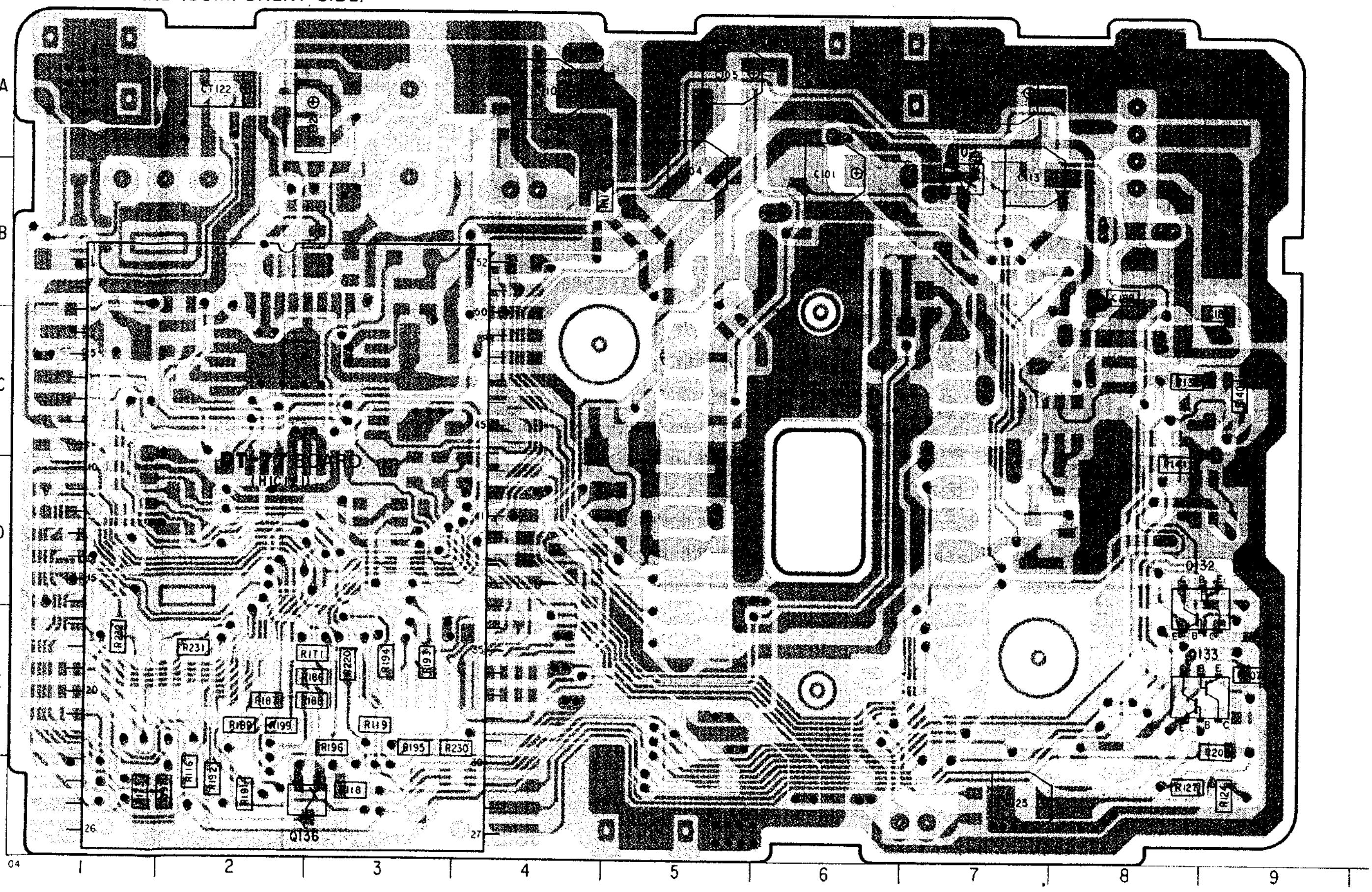

Be sure to always read "Precautions for replacement of CCD imager block" in page 93 when replacing the CD-65 board, complete, DT-77 board, complete and CCD imager block (IC101 on the CD-65 board and IC001 on the DT-77 board).

< DIODE >

D101	8-719-404-46	MA110
D102	8-719-404-52	MA143
D122	8-719-404-32	MA141WA
D123	8-719-404-46	MA110
D124	8-719-404-32	MA141WA
D125	8-719-949-46	1T32
D128	8-719-404-46	MA110

< IC >

IC121	8-752-326-08	CXD1159Q

< TRANSISTOR >

Q101	8-765-420-02	2SK300-3
Q102	8-729-905-35	2SC4081-R
Q121	8-729-402-84	XN4601
Q122	8-729-402-78	XN6401
Q123	8-729-402-19	XN6501
Q125	8-729-905-35	2SC4081-R
Q126	8-729-402-84	XN4601
Q129	8-729-905-23	2SA1576-R
Q130	8-729-905-35	2SC4081-R
Q131	8-729-402-84	XN4601
Q132	8-729-402-84	XN4601
Q133	8-729-402-84	XN4601
Q135	8-729-402-84	XN4601
Q136	8-729-402-45	UN5212

CD-65 BOARD (CONDUCTOR SIDE)

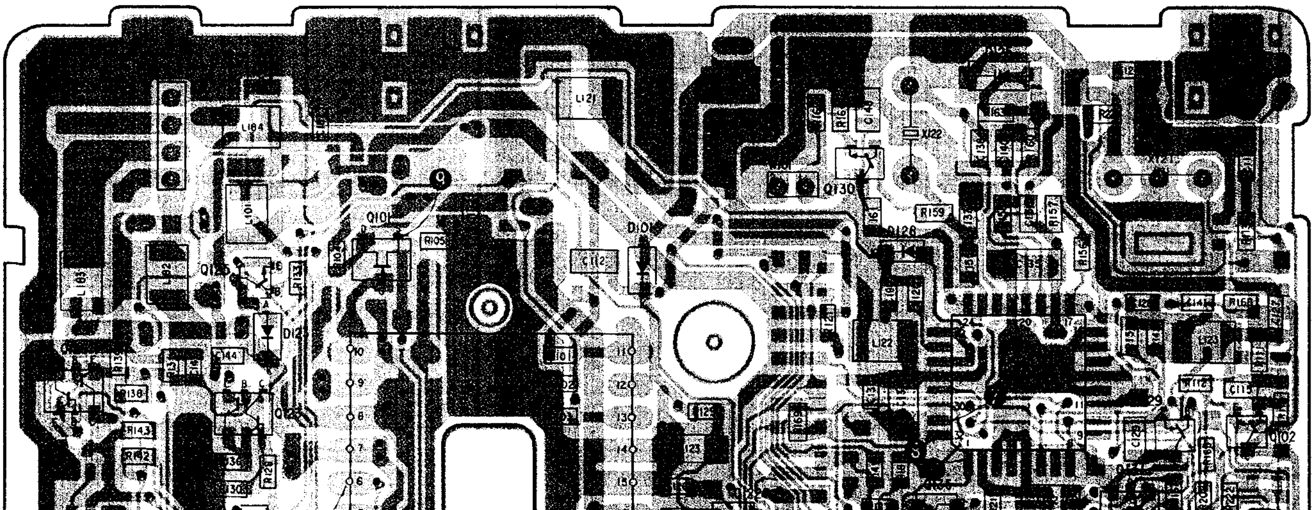

CD-65 BOARD

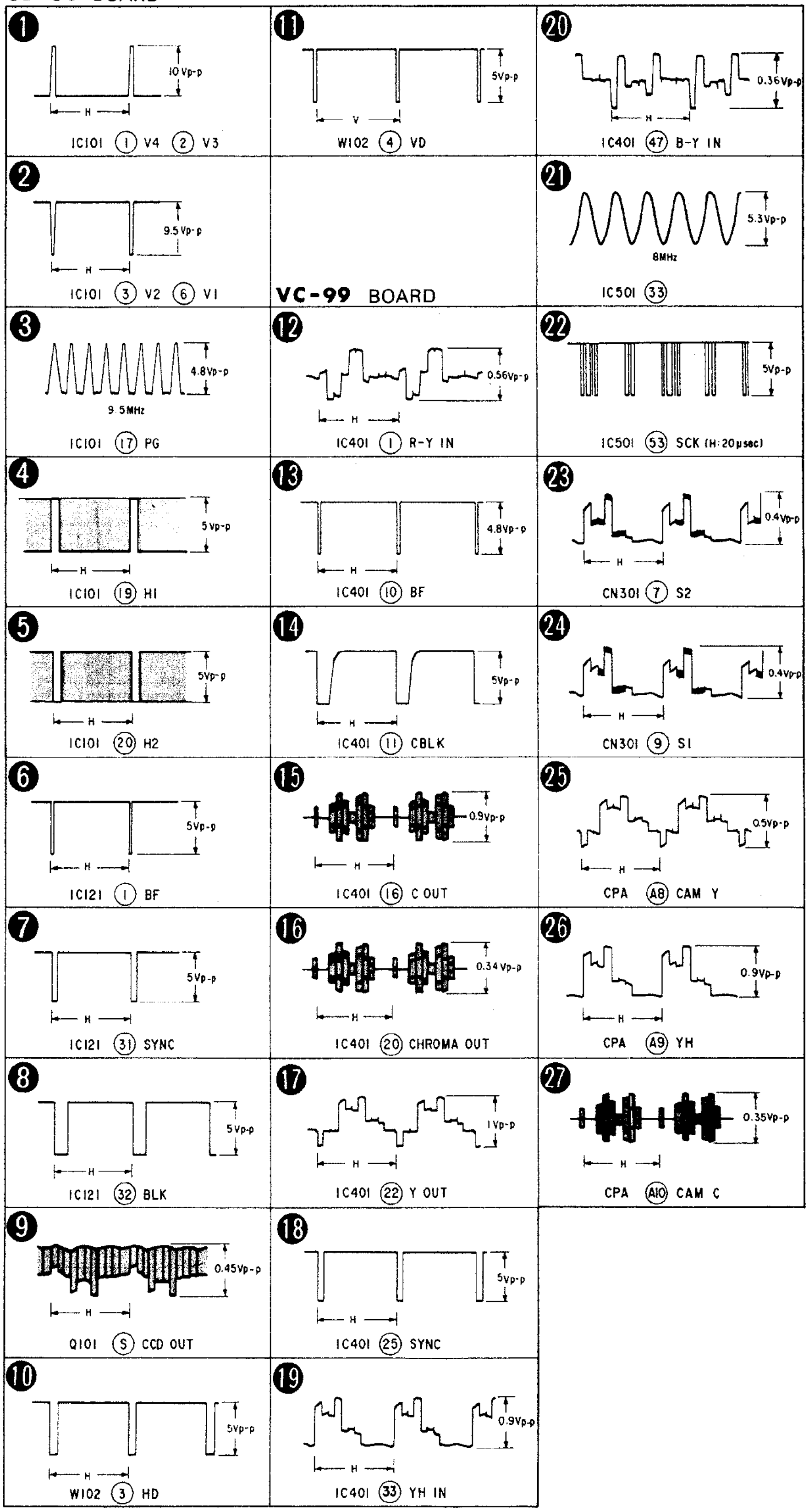
1
10Vp-p
H
IC101 (1) V4 (2) V3
2
9.5Vp-p
H
IC101 (3) V2 (6) V1
3
4.8Vp-p
9.5MHz
IC101 (17) PG
4
5Vp-p
H
IC101 (19) H1
5
5Vp-p
H
IC101 (20) H2
6
5Vp-p
H
IC121 (1) BF
7
5Vp-p
H
IC121 (31) SYNC
8
5Vp-p
H
IC121 (32) BLK
9
0.45Vp-p
H
Q101 (S) CCD OUT
10
5Vp-p
H
W102 (3) HD
11
5Vp-p
V
W102 (4) VD
VC-99 BOARD
12
0.56Vp-p
H
IC401 (1) R-Y IN
13
4.8Vp-p
H
IC401 (10) BF
14
5Vp-p
H
IC401 (11) CBLK
15
0.9Vp-p
H
IC401 (16) C OUT
16
0.34Vp-p
H
IC401 (20) CHROMA OUT
17
1Vp-p
H
IC401 (22) Y OUT
18
5Vp-p
H
IC401 (25) SYNC
19
0.9Vp-p
H
IC401 (33) YH IN
20
0.36Vp-p
H
IC401 (47) B-Y IN
21
5.3Vp-p
8MHz
IC501 (33)
22
5Vp-p
IC501 (53) SCK (H:20μsec)
23
0.4Vp-p
H
CN301 (7) S2
24
0.4Vp-p
H
CN301 (9) S1
25
0.5Vp-p
H
CPA (A8) CAM Y
26
0.9Vp-p
H
CPA (A9) YH
27
0.35Vp-p
H
CPA (A10) CAM C

AF-86 BOARD

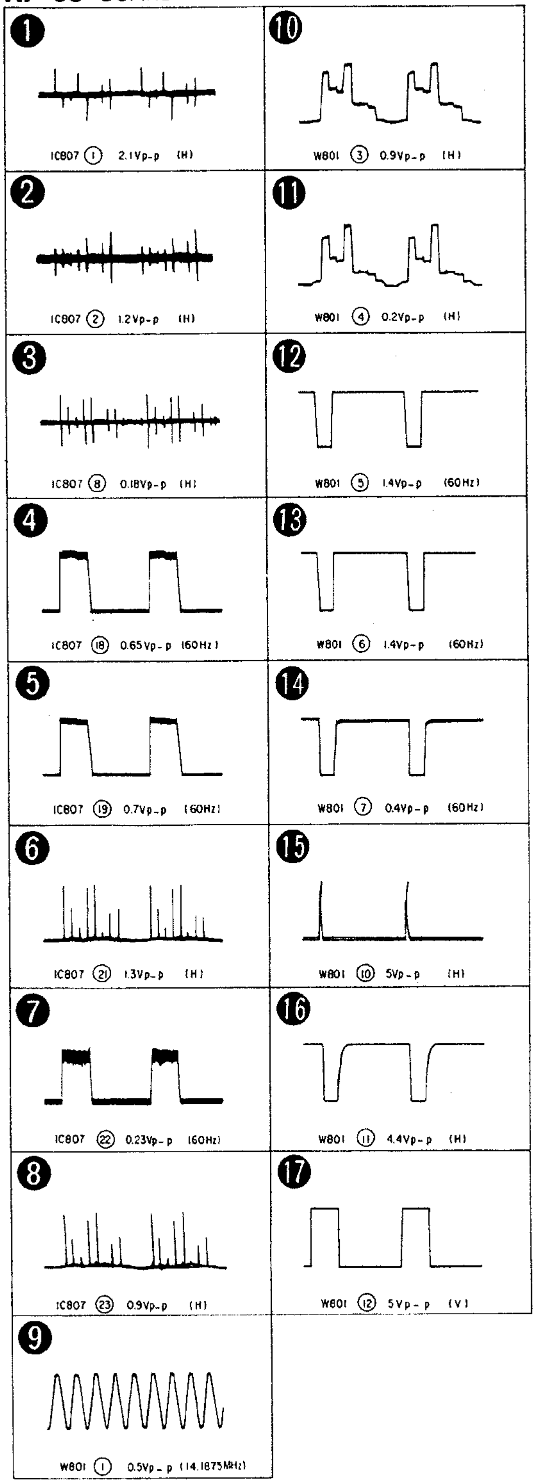

1
IC807 ① 2.1Vp-p (H)
2
IC807 ② 1.2Vp-p (H)
3
IC807 ⑧ 0.18Vp-p (H)
4
IC807 ⑱ 0.65Vp-p (60Hz)
5
IC807 ⑲ 0.7Vp-p (60Hz)
6
IC807 ㉑ 1.3Vp-p (H)
7
IC807 ㉒ 0.23Vp-p (60Hz)
8
IC807 ㉓ 0.9Vp-p (H)
9
W801 ① 0.5Vp-p (14.1875MHz)
10
W801 ③ 0.9Vp-p (H)
11
W801 ④ 0.2Vp-p (H)
12
W801 ⑤ 1.4Vp-p (60Hz)
13
W801 ⑥ 1.4Vp-p (60Hz)
14
W801 ⑦ 0.4Vp-p (60Hz)
15
W801 ⑩ 5Vp-p (H)
16
W801 ⑪ 4.4Vp-p (H)
17
W801 ⑫ 5Vp-p (V)

AF-86 (AUTO FOCUS) PRINTED WIRING BOARD
—Ref. No. AF-86 BOARD : 1000 series—

AF-86 BOARD (CONDUCTOR SIDE)

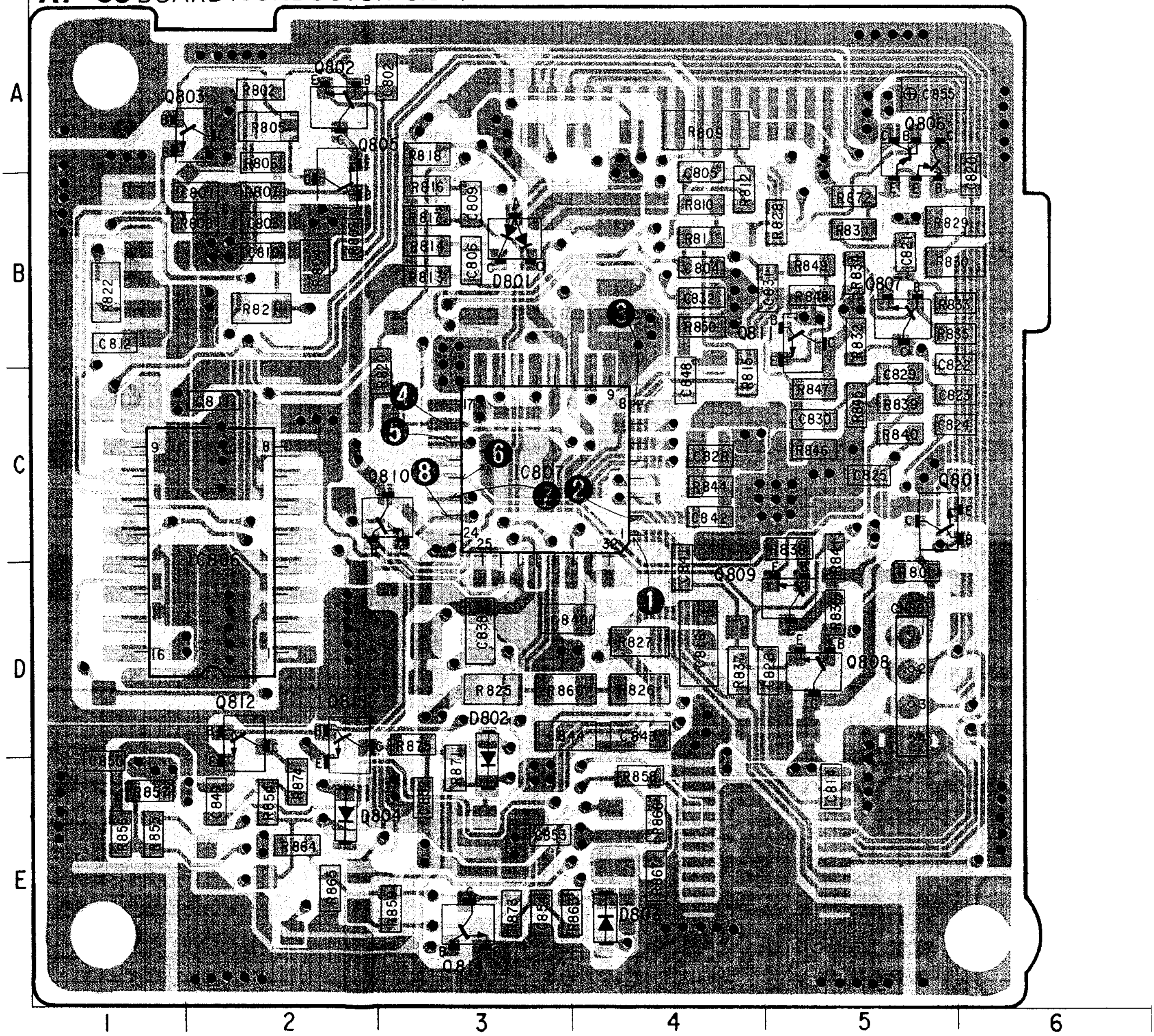

04

< DIODE >

D801	8-719-404-32	MA141WA
D802	8-719-404-46	MA110
D803	8-719-404-46	MA110
D804	8-719-404-46	MA110

< IC >

IC801	8-759-946-00	MB88341PFV
IC802	8-759-998-98	LM358D
IC803	8-759-100-93	uPC393G2
IC804	8-759-509-29	XRU4011BF
IC805	8-759-509-29	XRU4011BF
IC806	8-759-926-98	SN74HC4040NS
IC807	8-752-055-56	CXA1516Q
IC808	8-759-998-96	LM324DR
IC809	8-759-998-98	LM358DR

< TRANSISTOR >

Q801	8-729-402-45	UN5212
Q802	8-729-143-13	2SC4176-B34
Q803	8-729-905-35	2SC4081-R
Q804	8-729-905-23	2SA1576-R
Q805	8-729-143-13	2SC4176-B34
Q806	8-729-402-78	XN6401
Q807	8-729-905-35	2SC4081-R
Q808	8-729-905-35	2SC4081-R
Q809	8-729-905-35	2SC4081-R
Q810	8-729-905-35	2SC4081-R
Q811	8-729-905-35	2SC4081-R
Q812	8-729-420-44	UN5210
Q814	8-729-420-44	UN5210
Q815	8-729-420-44	UN5210

AF-86 BOARD (COMPONENT SIDE)

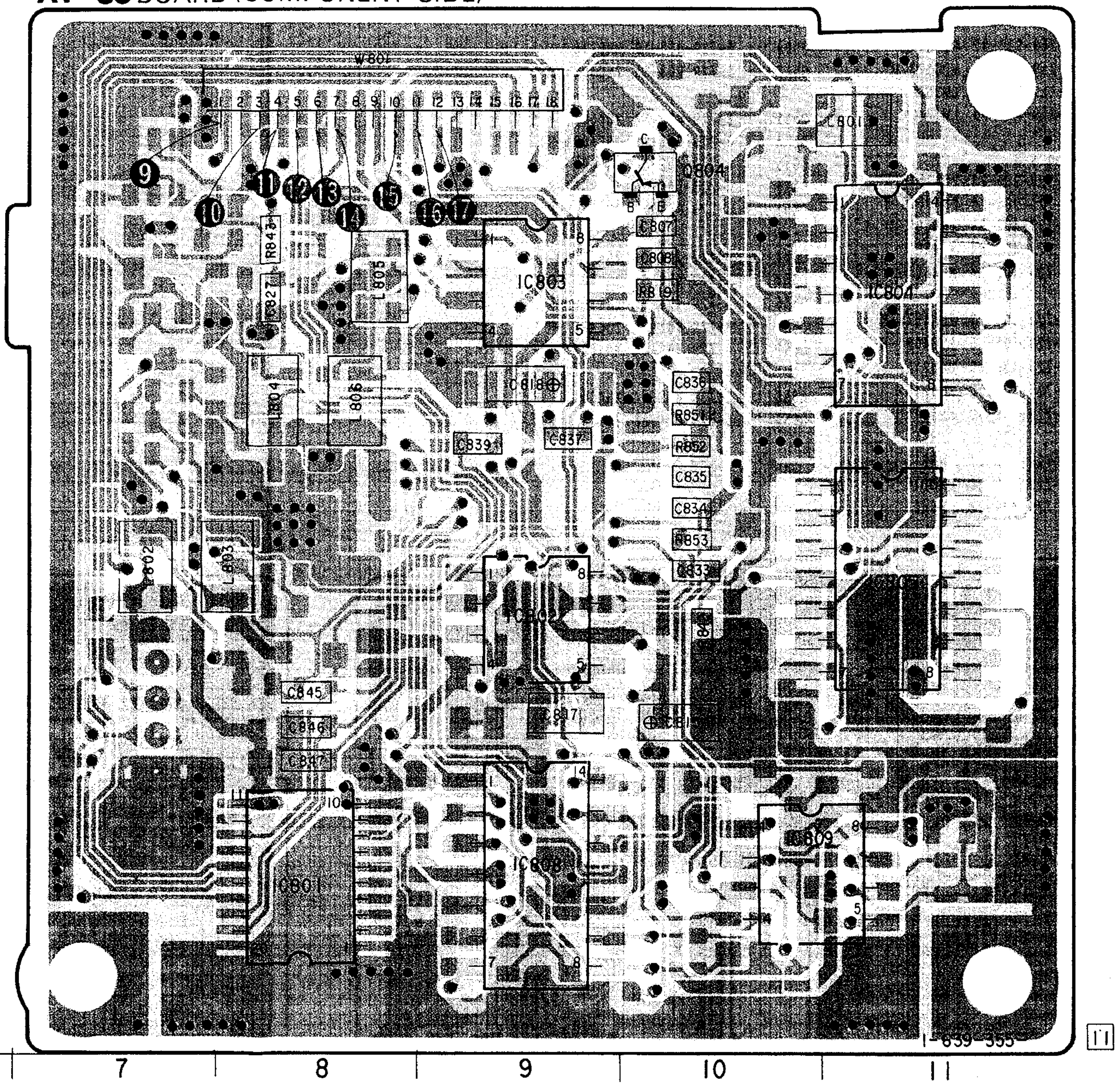

Q811	8-729-905-35	2SC4081-R
Q812	8-729-420-44	UN5210
Q814	8-729-420-44	UN5210
Q815	8-729-420-44	UN5210

AF-86 (AUTO FOCUS) SCHEMATIC DIAGRAM
—Ref. No. AF-86 BOARD : 1000 series—

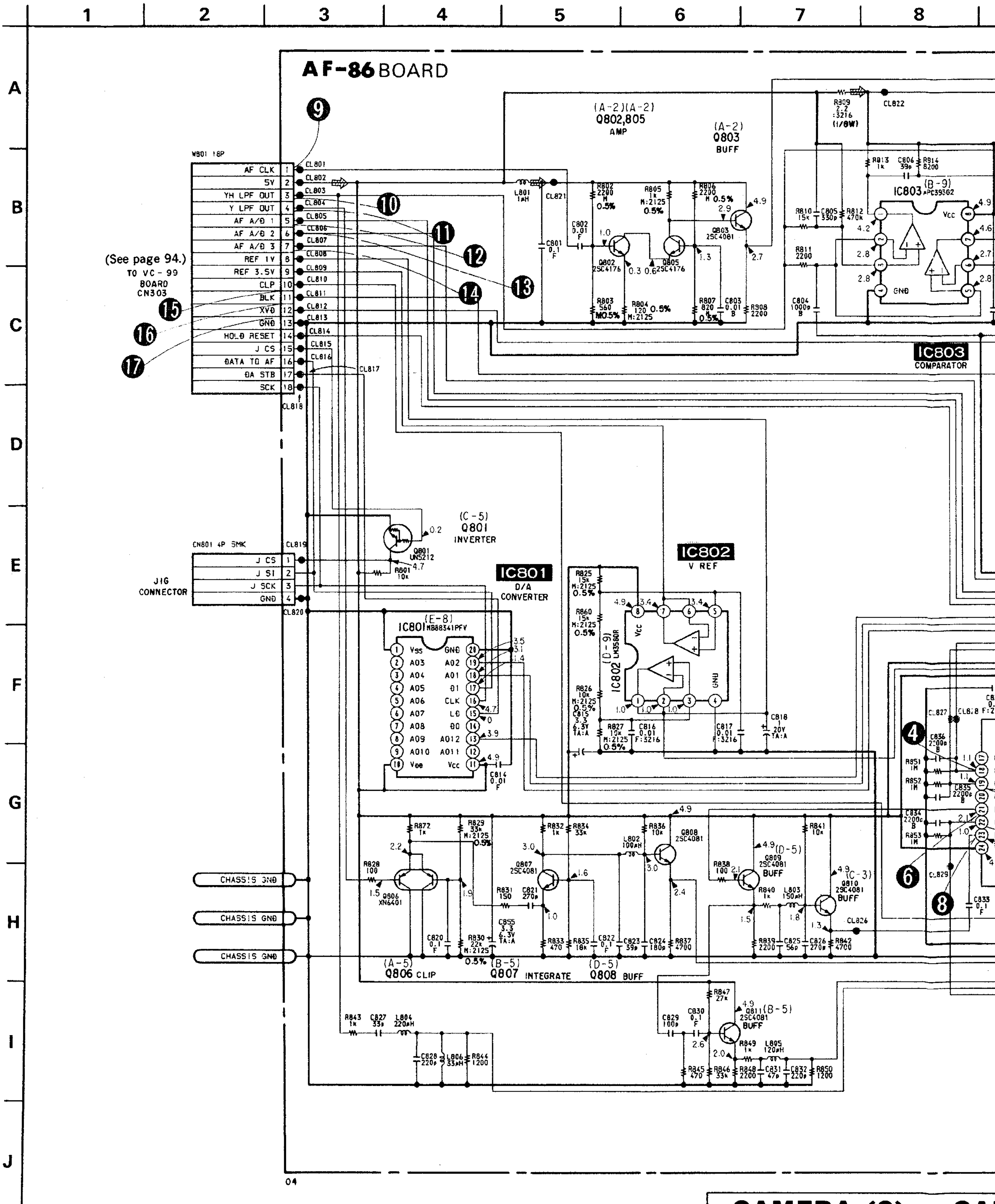

CAMERA (2) CA

7	8	9	10	11	12	13	14	15

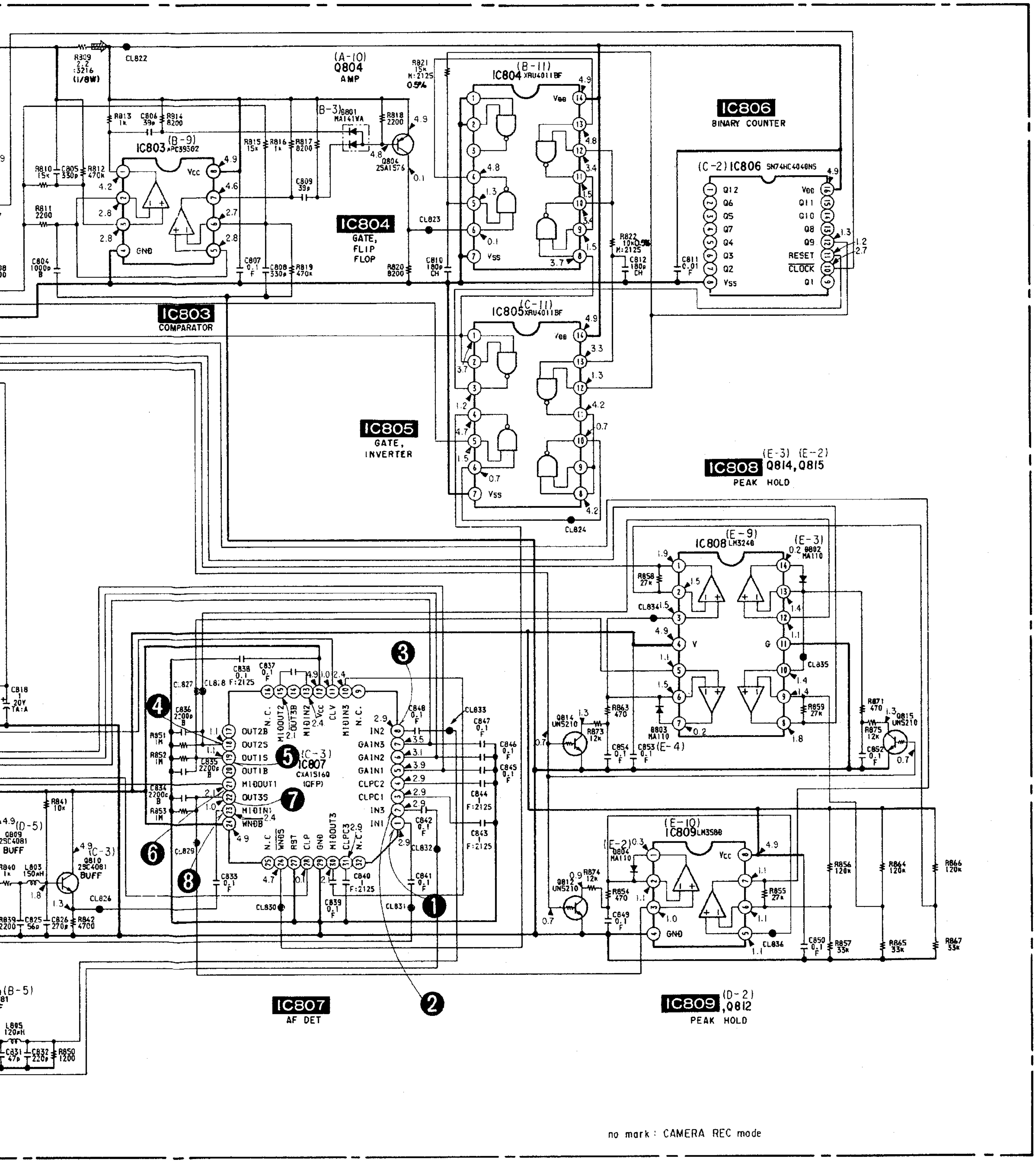

CT-38 (DIGITAL TITLER, CHARACTER GENERATOR) PRINTED WIRING BOARD

—Ref. No. CT-38 BOARD : 2000 series—

CT-38 BOARD (COMPONENT SIDE)

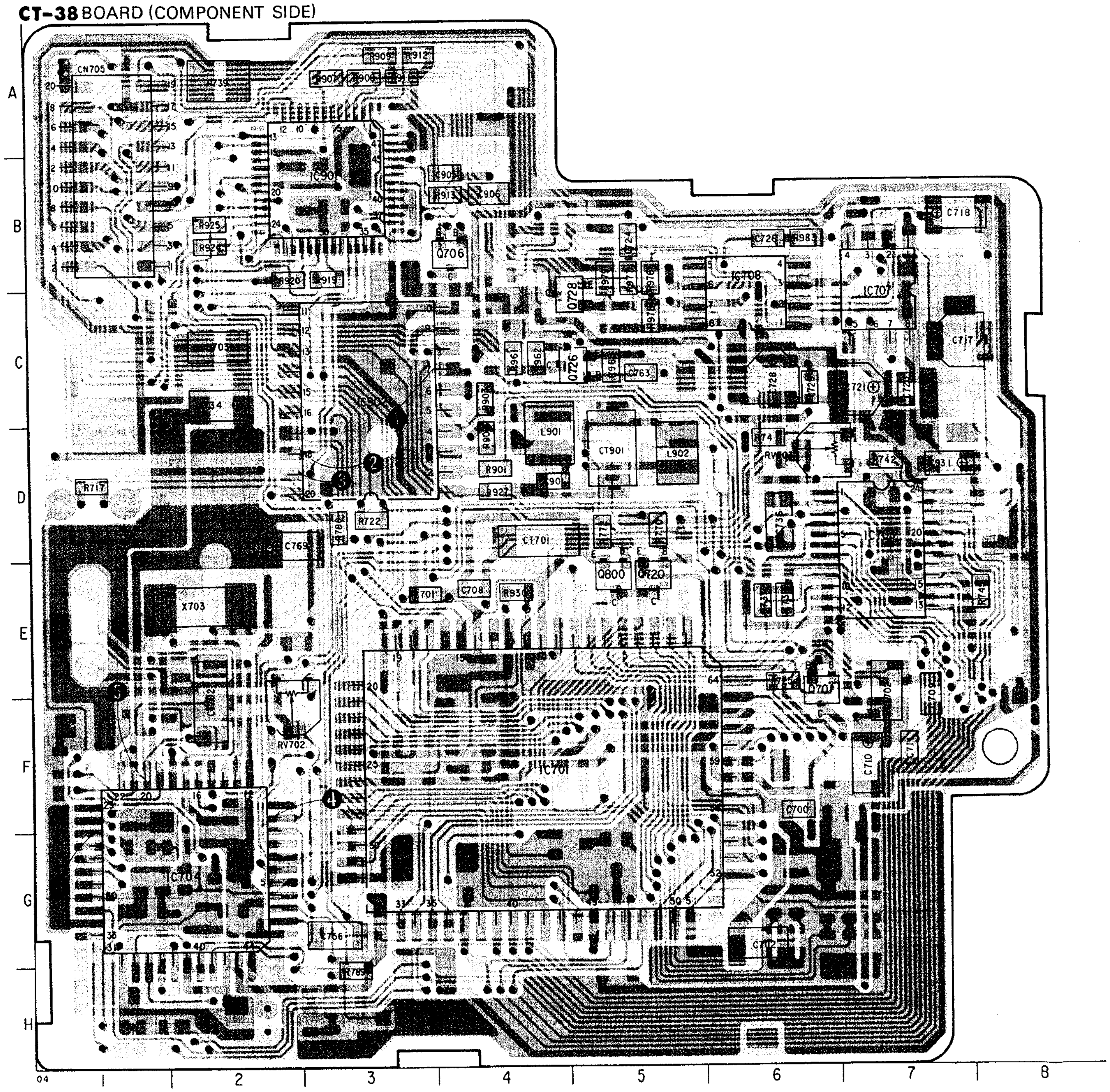

CT-38 BOARD (CONDUCTOR SIDE)

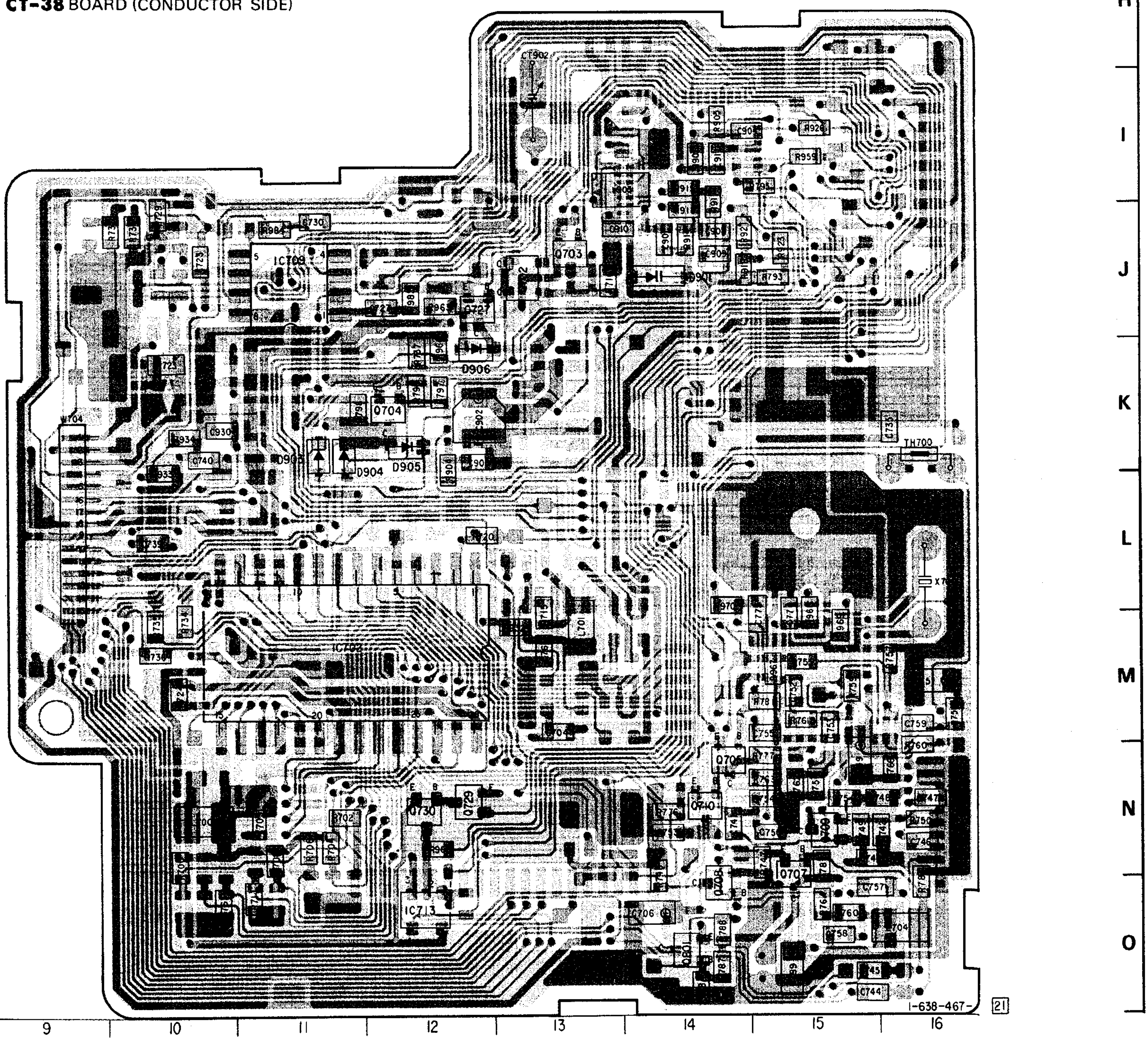

CT-38 BOARD

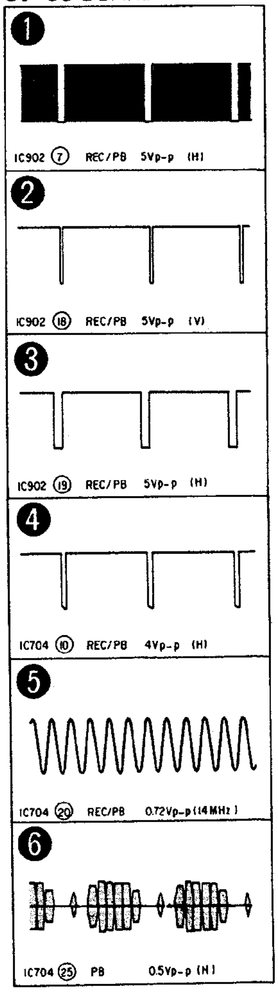

8-759-998-30	CF79028PG
8-759-979-96	MB8464A-15LLPF
8-752-039-49	CXA1393AN
8-759-634-47	M51285BGP
8-759-710-29	NJM2235M
8-759-710-09	NJM2233AM
8-759-710-09	NJM2233AM
8-759-234-20	TC7S08F
8-759-970-80	MB673198U
8-759-153-41	uPD6451AGT-611-E1

Q706	8-729-905-18	DTC144EU
Q707	8-729-905-35	2SC4081-R
Q708	8-729-905-15	DTC144WU
Q709	8-729-402-32	2SD1819A-R
Q709	8-729-905-35	2SC4081-R
Q710	8-729-905-35	2SC4081-R
Q720	8-729-905-18	DTC144EU
Q726	8-729-905-23	2SA1576-R
Q727	8-729-905-35	2SC4081-R
Q728	8-729-905-35	2SC4081-R
Q729	8-729-905-18	DTC144EU
Q730	8-729-905-12	DTA144EU
Q800	8-729-905-18	DTC144EU
Q801	8-729-905-23	2SA1576-R

CT-38 (DIGITAL TITLER, CHARACTER GENERATOR) SCHEMATIC DIAGRAM

—Ref. No. CT-38 BOARD : 2000 series—

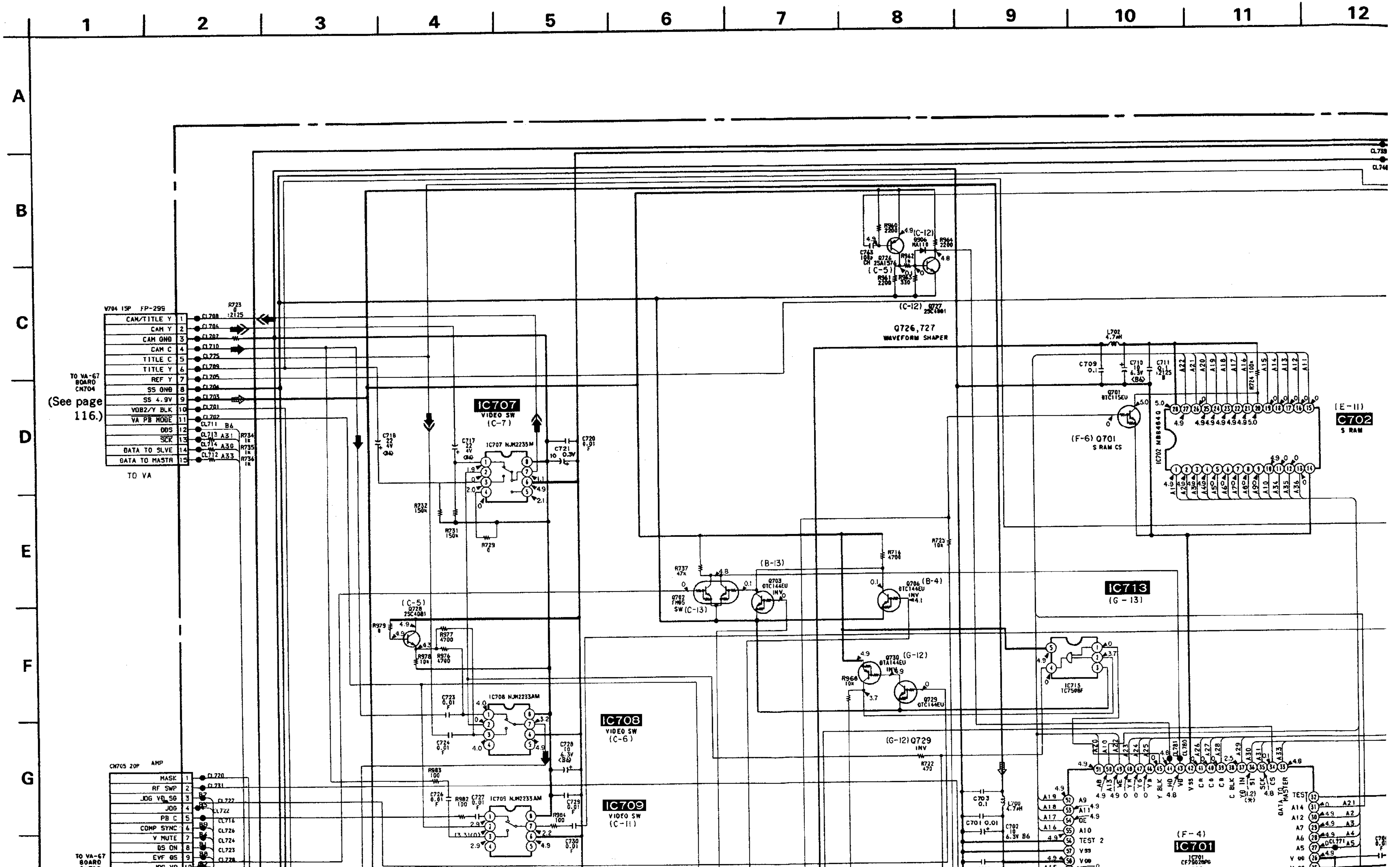

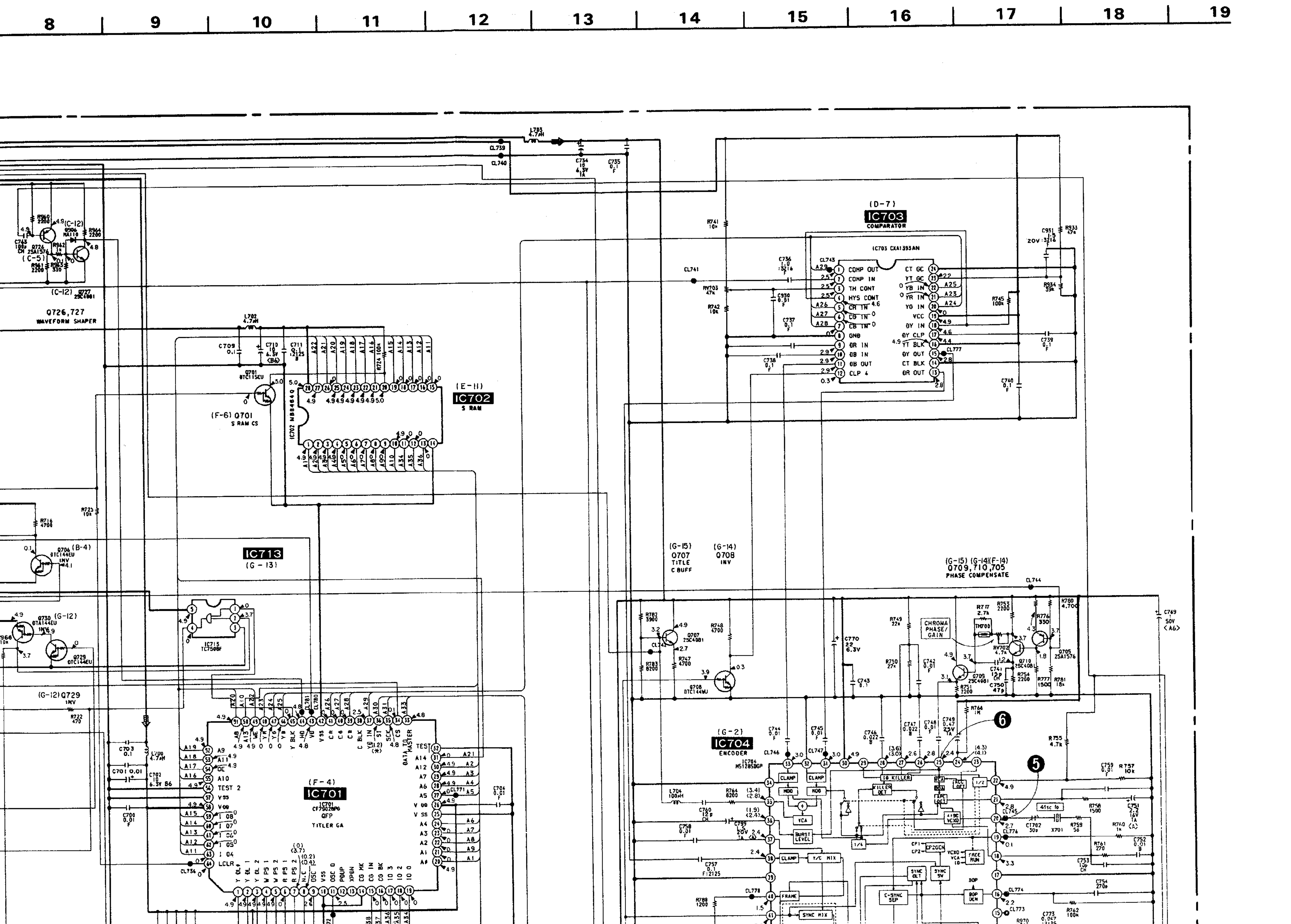
8
9
10
11
12
13
14
15
16
17
18
19
(D-7)
IC703
COMPARATOR
IC703 CXA1393AN
(E-11)
IC702
S RAM
IC702 MB8464Q
(F-6) Q701
S RAM CS
Q726,727
WAVEFORM SHAPER
IC713
(G-13)
IC713 TC7S08F
(F-4)
IC701
CF7502BPG
QFP
TITLER GA
(G-2)
IC704
ENCODER
IC704 M51285BGP
(G-15)
Q707
TITLE
C BUFF
(G-14)
Q708
INV
(G-15) (G-14)(F-14)
Q709,710,705
PHASE COMPENSATE
CHROMA
PHASE/
GAIN
(G-12) Q729
INV
Q706 (B-4)
DTC144EU
INV
Q730 (G-12)
DTA144EU
INV

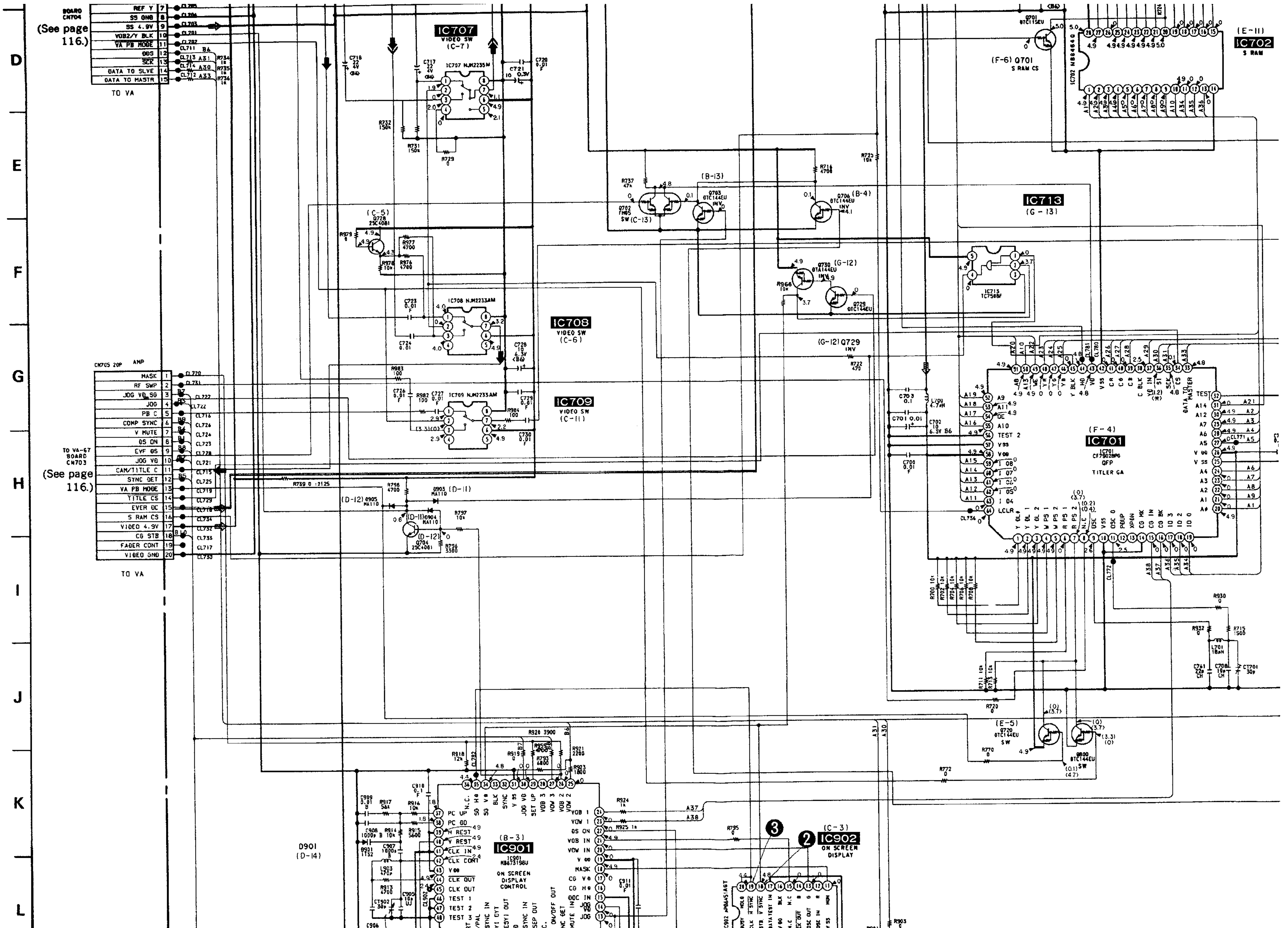
BOARD CN704
(See page 116.)
REF Y
SS GND
SS 4.9V
VOB2/Y BLK
VA PB MODE
ODS
SCK
DATA TO SLVE
DATA TO MASTR
TO VA
IC707
VIDEO SW
(C-7)
IC707 NJM2235M
IC708
VIDEO SW
(C-6)
IC708 NJM2233AM
IC709
VIDEO SW
(C-11)
IC709 NJM2233AM
IC702
S RAM
(E-11)
(F-6) Q701
S RAM CS
IC713
(G-13)
IC713 TC7S08F
Q702 FN9S SW (C-13)
Q703 DTC144EU INV
Q706 DTC144EU INV (B-4)
Q728 2SC4081 (C-5)
Q730 DTA144EU INV (G-12)
Q729 DTC144EU
(G-12) Q729 INV
CN705 20P AMP
MASK
RF SWP
JOG VD SG
JOG
PB C
COMP SYNC
V MUTE
DS ON
EVF DS
JOG VD
CAM/TITLE C
SYNC DET
VA PB MODE
TITLE CS
EVER DC
S RAM CS
VIDEO 4.9V
CG STB
FADER CONT
VIDEO GND
TO VA-67 BOARD CN703
(See page 116.)
TO VA
(F-4)
IC701
IC701 CF79028PG
QFP
TITLER GA
(E-5) Q720 DTC144EU SW
Q800 DTC144EU SW
D901 (D-14)
(B-3)
IC901
IC901 MB473198U
ON SCREEN DISPLAY CONTROL
(C-3)
IC902
ON SCREEN DISPLAY
Q704 2SC4081
D903 (D-11) MA110
(D-12) D905 MA110
(D-11) D904 MA110
D
E
F
G
H
I
J
K
L

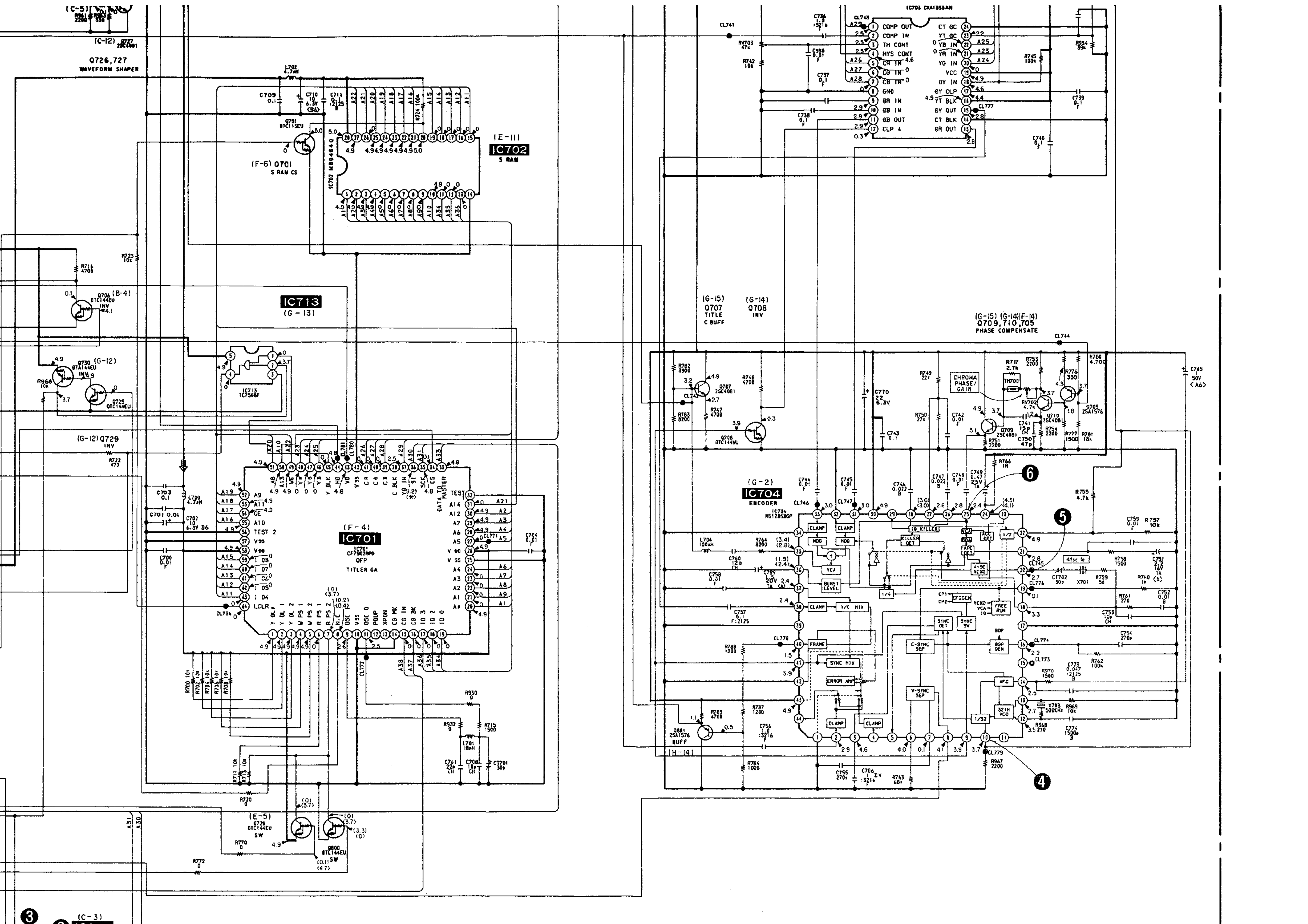

Q726,727
WAVEFORM SHAPER
IC703 CXA1393AN
(E-11)
IC702
S RAM
(F-6) Q701
S RAM CS
IC713
(G-13)
IC713
TC7S08F
Q706 (B-4)
INV
Q730 (G-12)
(G-12) Q729
INV
(F-4)
IC701
IC701
CF79028PG
QFP
TITLER GA
(E-5)
Q720
SW
Q800
SW
(G-15)
Q707
TITLE
C BUFF
(G-14)
Q708
INV
(G-15) (G-14)(F-14)
Q709,710,705
PHASE COMPENSATE
CHROMA
PHASE/
GAIN
(G-2)
IC704
ENCODER
IC704
M51285BGP
Q801
2SA1576
BUFF
(H-14)

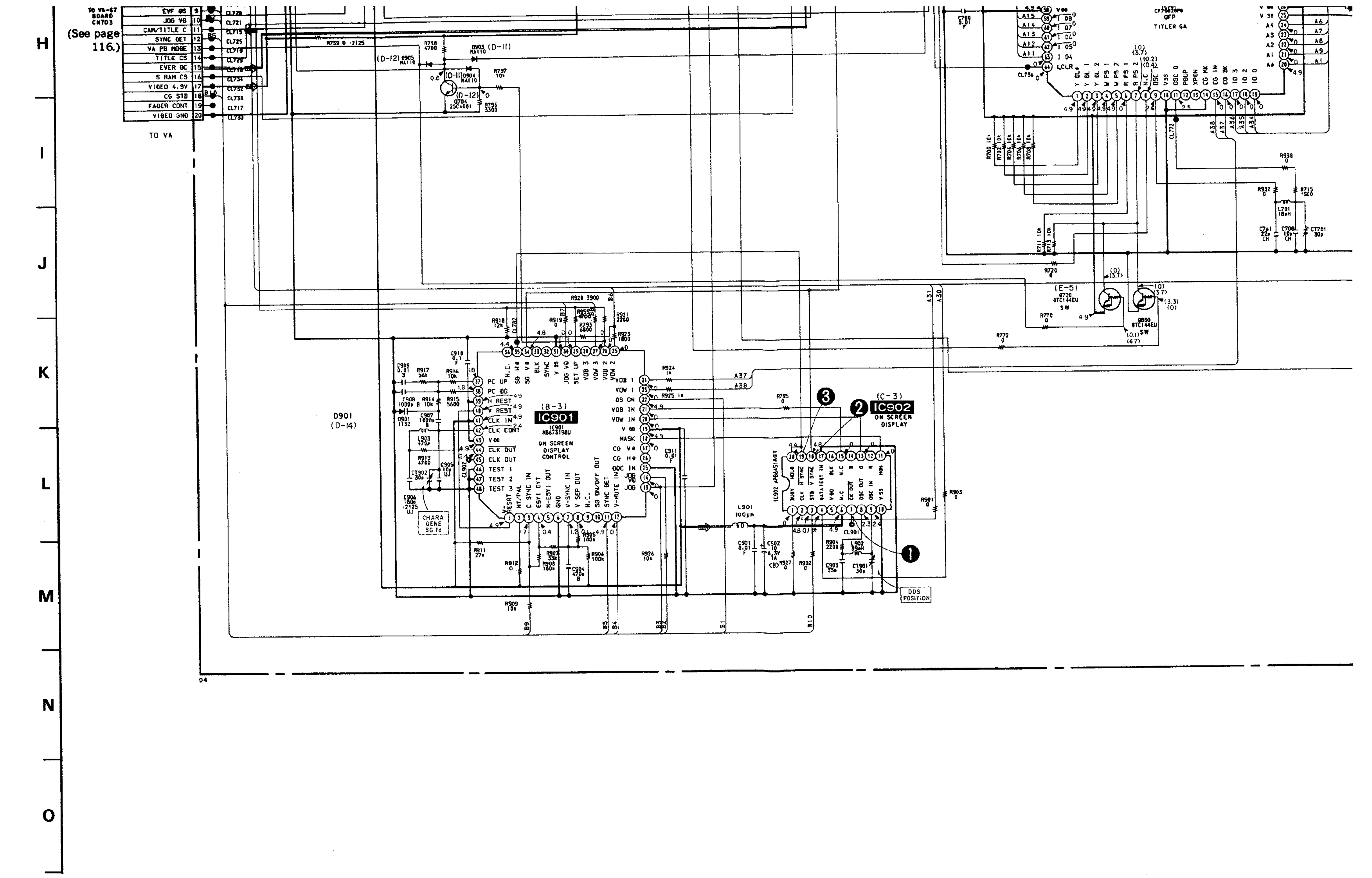
TO VA-67 BOARD CN703
(See page 116.)
TO VA
IC901
ON SCREEN DISPLAY CONTROL
IC902
ON SCREEN DISPLAY
CHARA GENE SG 1c
DDS POSITION
TITLER GA
D901 (D-14)

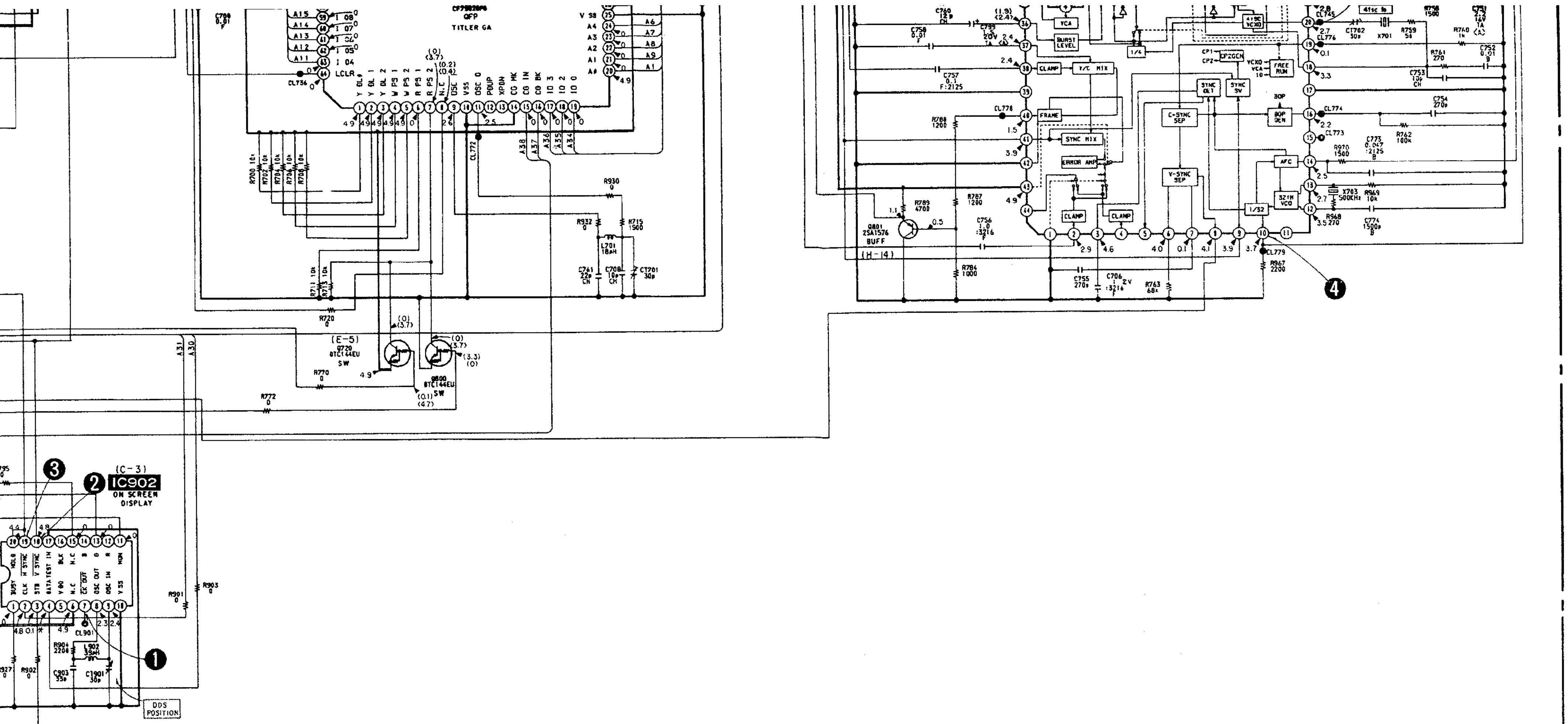

no mark : REC/PB mode
( ) : REC mode
( ) : PB mode
✻ : Impossible to measure the voltage at the marked points.

CT-38 BOARD

• **Signal path**

	VIDEO Signal		
	CHROMA	Y	Y/CHROMA
REC	➡	➡>	➡>>

VA-67 (VIDEO/AUDIO) SCHEMATIC DIAGRAM
—Ref. No. VA-67 BOARD: 2000 series—

1	2	3	4	5	6	7	8	9	10	11	12

A B C D E F G

• **Signal path**

	VIDEO Signal			AUDIO Signal
	CHROMA	Y	Y/CHROMA	
REC	➡	➡	➡	➡
PB	⇨	⇨	⇨	⇨

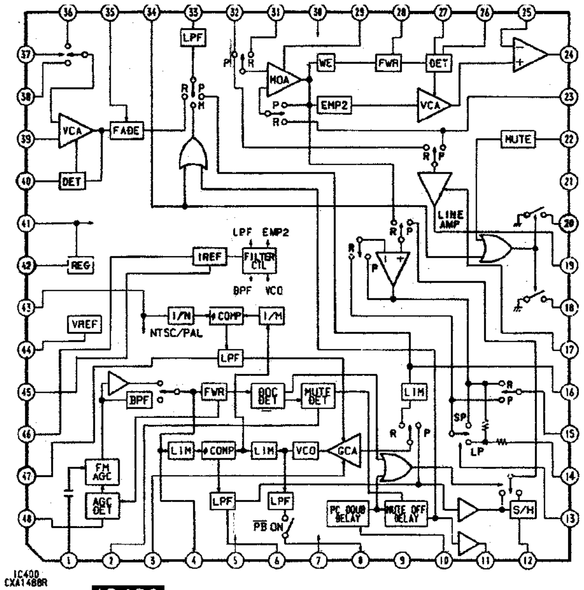

IC400 AFM PROCESS

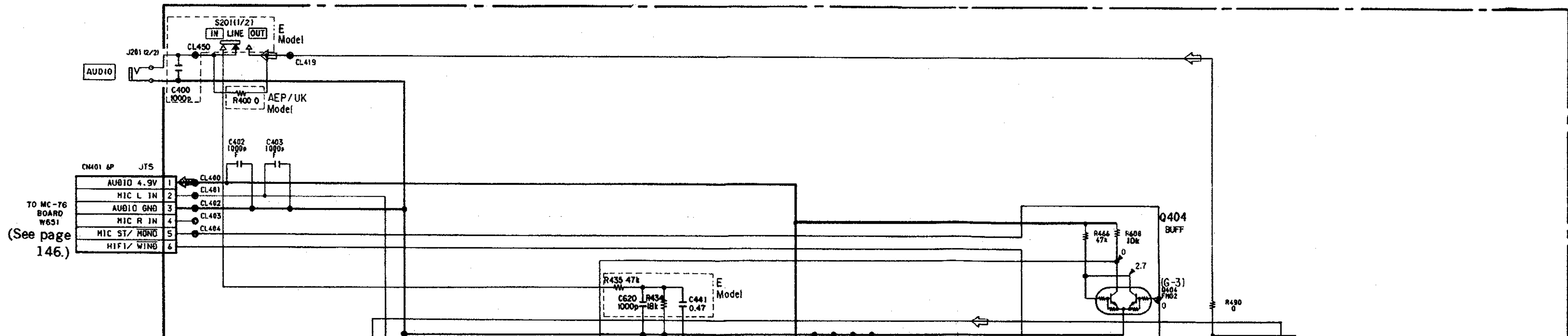

12 | 13 | 14 | 15 | 16 | 17 | 18 | 19 | 20 | 21 | 22 | 23 | 24

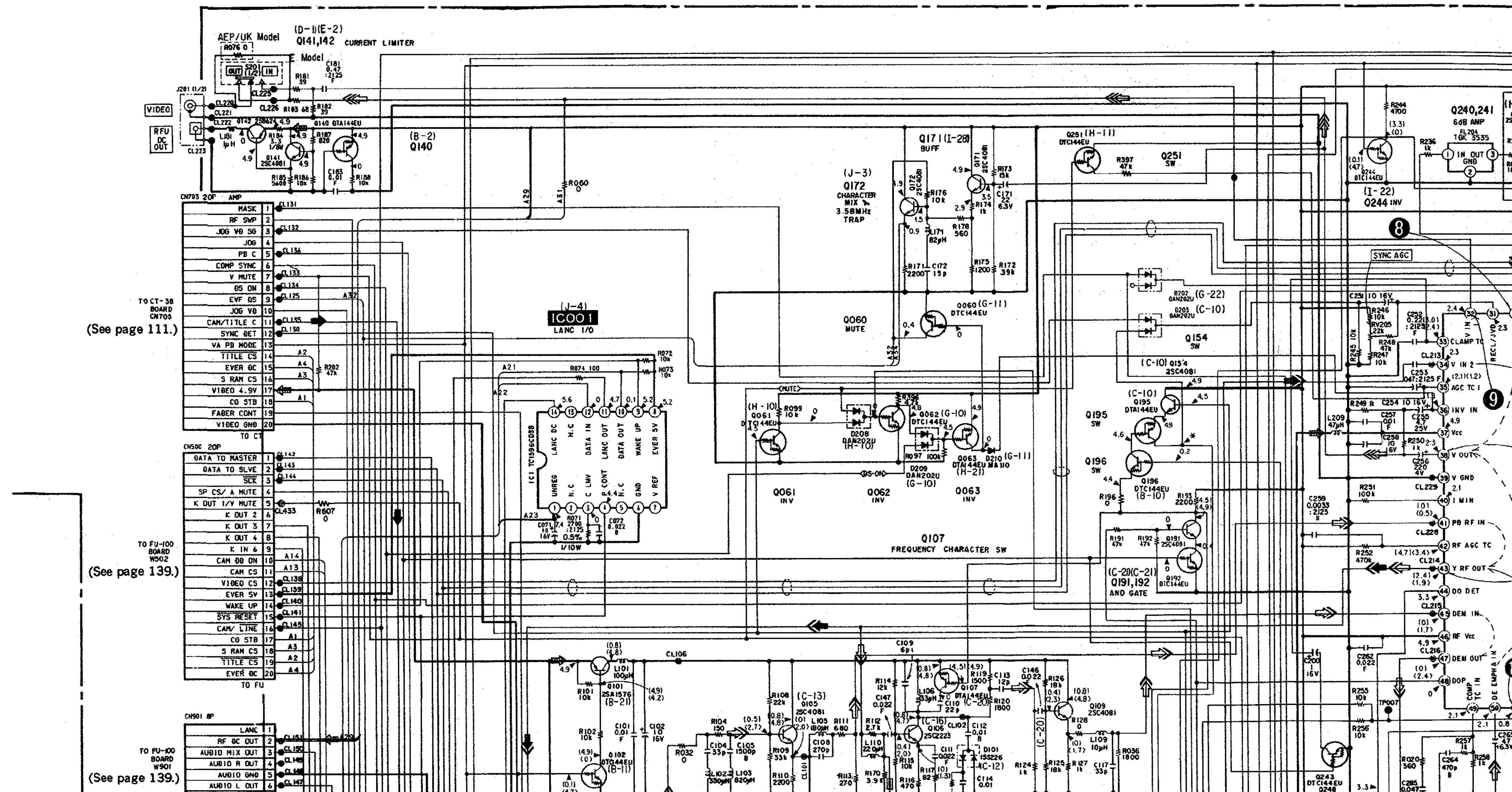

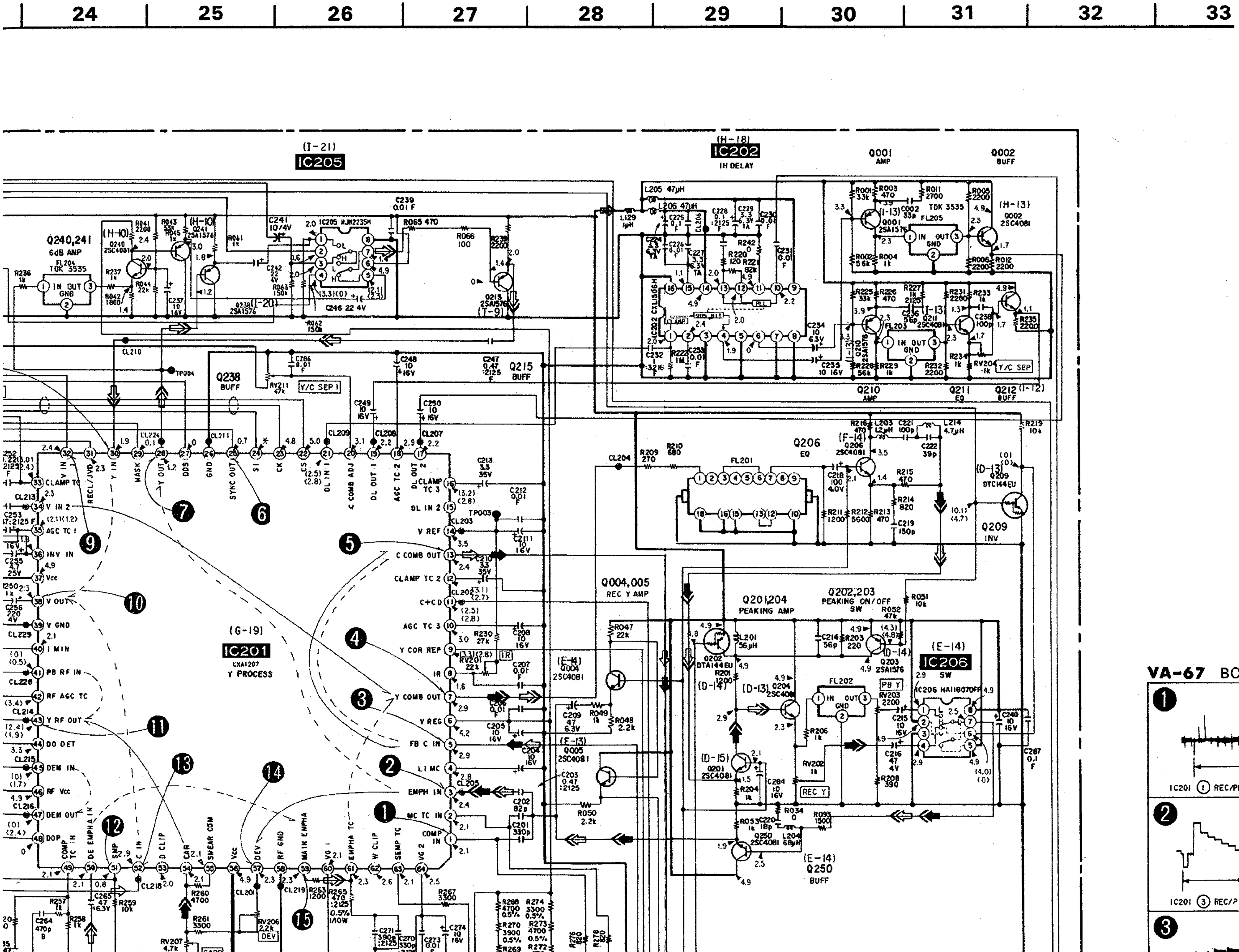
24
25
26
27
28
29
30
31
32
33
(I-21)
IC205
(H-18)
IC202
1H DELAY
Q001
AMP
Q002
BUFF
Q240,241
6dB AMP
Q238
BUFF
Q215
BUFF
Y/C SEP I
Q210
AMP
Q211
EQ
Q212
BUFF
Y/C SEP
Q206
EQ
FL201
Q209
INV
Q004,005
REC Y AMP
Q201,204
PEAKING AMP
Q202,203
PEAKING ON/OFF
SW
(E-14)
IC206
SW
(G-19)
IC201
CXA1207
Y PROCESS
(E-14)
Q250
BUFF
REC Y
PB Y
DEV

VA-67 BOARD

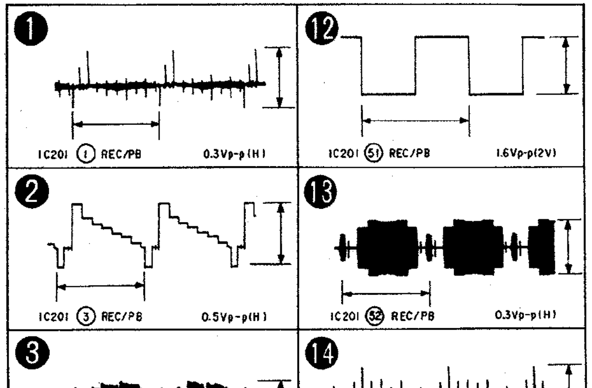
IC201 ① REC/PB 0.3Vp-p(H)
IC201 ⑤① REC/PB 1.6Vp-p(2V)
IC201 ③ REC/PB 0.5Vp-p(H)
IC201 ⑤② REC/PB 0.3Vp-p(H)

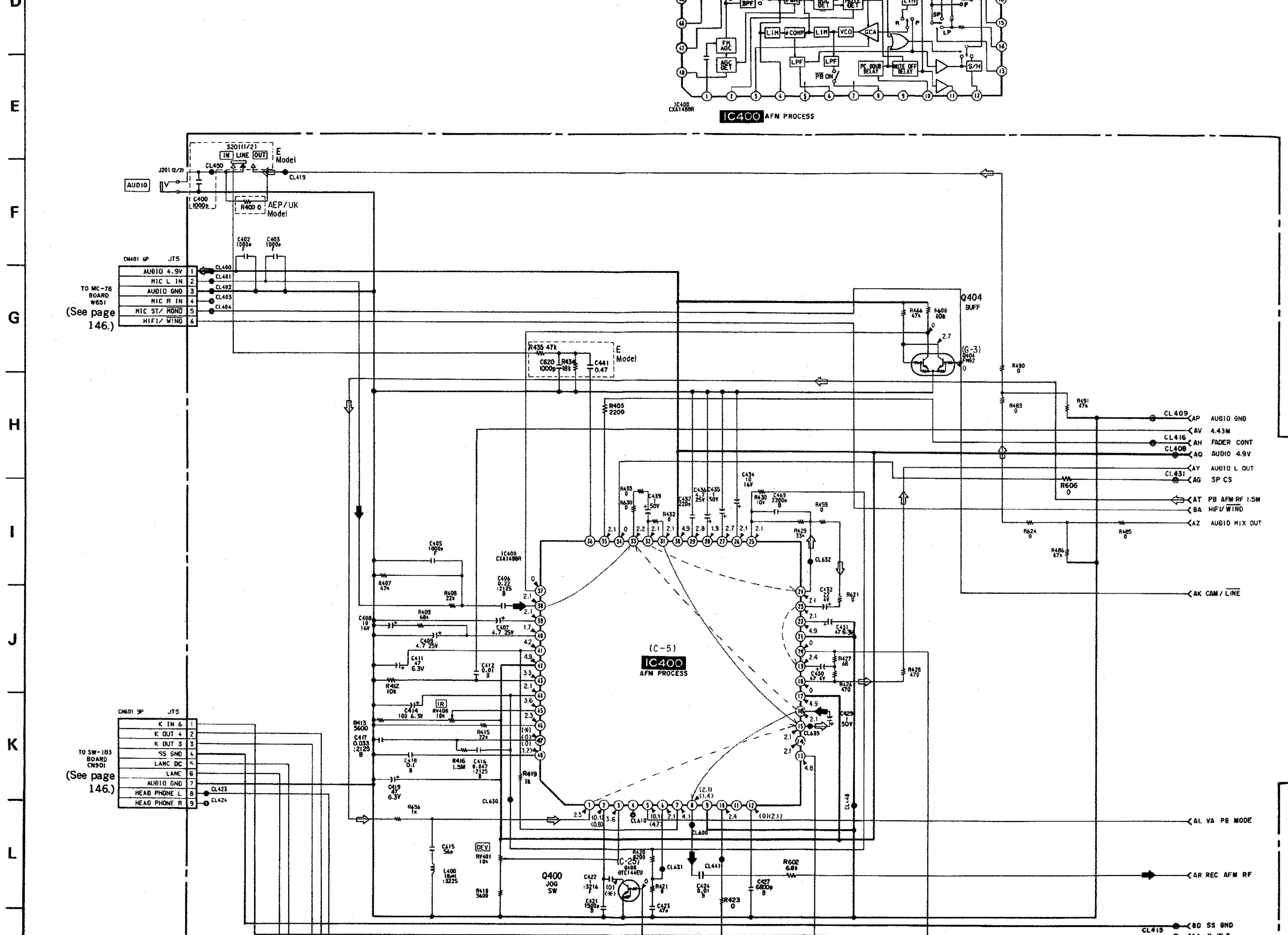

IC400 AFM PROCESS
IC400 CXA1488R
S201(1/2)
IN LINE OUT
E Model
AEP/UK Model
AUDIO
J201 (2/2)
CN401 6P JTS
AUDIO 4.9V
MIC L IN
AUDIO GND
MIC R IN
MIC ST/ MONO
HIFI/ WIND
TO MC-76 BOARD W651
(See page 146.)
Q404 BUFF
CL409 AP AUDIO GND
AV 4.43M
CL416 AH FADER CONT
CL408 AQ AUDIO 4.9V
AY AUDIO L OUT
CL431 AG SP CS
AT PB AFM RF 1.5M
BA HIFI/ WIND
AZ AUDIO MIX OUT
AK CAM/ LINE
(C-5)
IC400
AFM PROCESS
CN601 9P JTS
K IN 6
K OUT 4
K OUT 3
SS GND
LANC DC
LANC
AUDIO GND
HEAD PHONE L
HEAD PHONE R
TO SW-183 BOARD CN901
(See page 146.)
AL VA PB MODE
AR REC AFM RF
Q400 JOG SW
BD SS GND
CL415

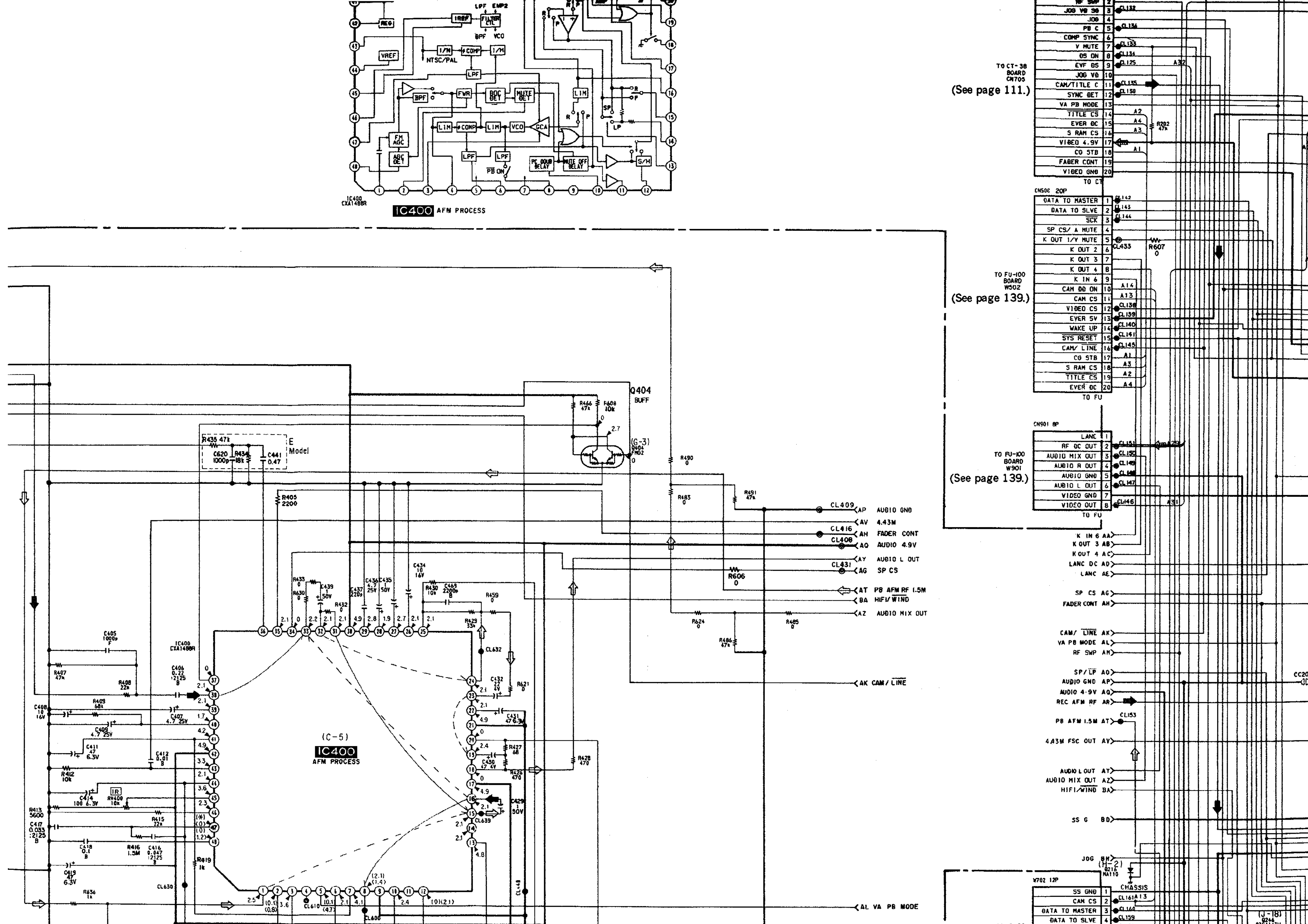

IC400 AFM PROCESS
IC400 CXA1488R
LPF EMP2
IREF
FILTER CTL
BPF VCO
REG
VREF
1/N
COMP
NTSC/PAL
LPF
FWR
BPF
DOC DET
MUTE DET
LIM
COMP
VCO
GCA
FM AGC
AGC DET
PB ON
PB DOUB DELAY
MUTE OFF DELAY
S/H
SP
LP
Q404 BUFF
(G-3)
R435 47k
C620 1000p
R434 18k
C441 0.47
E Model
R490 0
R483 0
R491 47k
R405 2200
R606 0
R624 0
R485 0
R486 47k
R430 10k
C469 2200p
R459 0
R429 33k
CL632
C432 22 4V
R621 0
C431 47 6.3V
R427 68
C430 47 4V
R424 470
R428 470
C429 50V
CL639
CL48
CL600
CL610
CL630
(C-5)
IC400
AFM PROCESS
C405 1000p
R407 47k
R408 22k
C406 0.22 :2125 B
C408 10 16V
R409 68k
C407 4.7 25V
C409 4.7 25V
C411 47 6.3V
C412 0.01 B
R412 10k
C414 100 6.3V
IR
RV400 10k
R413 5600
C417 0.033 :2125 B
R415 22k
C418 0.1 B
R416 1.5M
C416 0.047 :2125 B
C419 47 6.3V
R419 1k
R636 1k
C437 220p
C436 4.7 25V
C435 1 50V
C434 10 16V
C439 50V
R433 0
R630 0
R432 0
CL409 AP AUDIO GND
AV 4.43M
CL416 AH FADER CONT
CL408 AQ AUDIO 4.9V
AY AUDIO L OUT
CL431 AG SP CS
AT PB AFM RF 1.5M
BA HIFI/WIND
AZ AUDIO MIX OUT
AK CAM/LINE
AL VA PB MODE
TO CT-38 BOARD CN705
(See page 111.)
RF SWP 2
JOG V0 3G 3
JOG 4
PB C 5
COMP SYNC 6
V MUTE 7
DS ON 8
EVF DS 9
JOG V0 10
CAM/TITLE C 11
SYNC DET 12
VA PB MODE 13
TITLE CS 14
EVER DC 15
S RAM CS 16
VIDEO 4.9V 17
CG STB 18
FADER CONT 19
VIDEO GND 20
TO CT
R202 47k
CN506 20P
DATA TO MASTER 1
DATA TO SLVE 2
SCK 3
SP CS/ A MUTE 4
K OUT 1/Y MUTE 5
K OUT 2 6
K OUT 3 7
K OUT 4 8
K IN 6 9
CAM DD ON 10
CAM CS 11
VIDEO CS 12
EVER 5V 13
WAKE UP 14
SYS RESET 15
CAM/ LINE 16
CG STB 17
S RAM CS 18
TITLE CS 19
EVER DC 20
TO FU
TO FU-100 BOARD W502
(See page 139.)
CL433
R607 0
CN901 8P
LANC 1
RF DC OUT 2
AUDIO MIX OUT 3
AUDIO R OUT 4
AUDIO GND 5
AUDIO L OUT 6
VIDEO GND 7
VIDEO OUT 8
TO FU
TO FU-100 BOARD W901
(See page 139.)
K IN 6 AA
K OUT 3 AB
K OUT 4 AC
LANC DC AD
LANC AE
SP CS AG
FADER CONT AH
CAM/ LINE AK
VA PB MODE AL
RF SWP AM
SP/LP AO
AUDIO GND AP
AUDIO 4.9V AQ
REC AFM RF AR
CL153
PB AFM 1.5M AT
4.43M FSC OUT AV
AUDIO L OUT AY
AUDIO MIX OUT AZ
HIFI/WIND BA
SS G BD
JOG BH
(H-2)
D215 MA110
CHASSIS
W702 12P
SS GND 1
CAM CS 2
DATA TO MASTER 3
DATA TO SLVE 4
(J-18)

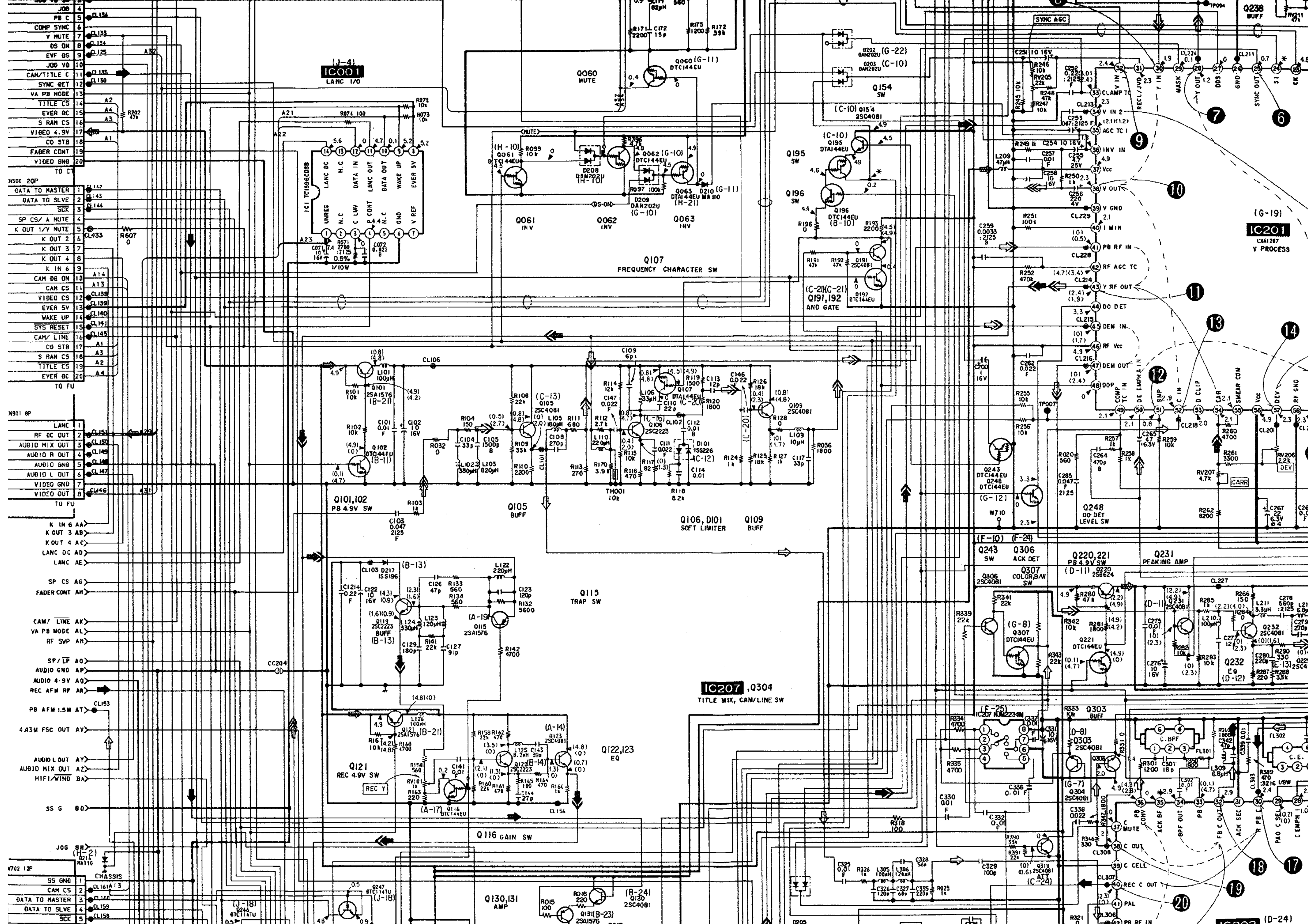

JOG
PB C
COMP SYNC
V MUTE
DS ON
EVF DS
JOG VD
CAM/TITLE C
SYNC SET
VA PB MODE
TITLE CS
EVER DC
S RAM CS
VIDEO 4.9V
CG STB
FADER CONT
VIDEO GND
TO CT
DATA TO MASTER
DATA TO SLVE
SCK
SP CS/A MUTE
K OUT 1/Y MUTE
K OUT 2
K OUT 3
K OUT 4
K IN 6
CAM DD ON
CAM CS
VIDEO CS
EVER 5V
WAKE UP
SYS RESET
CAM/LINE
CG STB
S RAM CS
TITLE CS
EVER DC
TO FU
LANC
RF DC OUT
AUDIO MIX OUT
AUDIO R OUT
AUDIO GND
AUDIO L OUT
VIDEO GND
VIDEO OUT
TO FU
IC001
LANC I/O
IC1 TC1596C098
Q060
MUTE
Q061
INV
Q062
INV
Q063
INV
Q107
FREQUENCY CHARACTER SW
Q154
SW
Q195
SW
Q196
SW
Q191,192
AND GATE
SYNC AGC
IC201
CXA1207
Y PROCESS
Q238
BUFF
Q101,102
PB 4.9V SW
Q105
BUFF
Q106, D101
SOFT LIMITER
Q109
BUFF
Q115
TRAP SW
Q121
REC 4.9V SW
REC Y
Q116 GAIN SW
Q122,123
EQ
Q130,131
AMP
IC207 ,Q304
TITLE MIX, CAM/LINE SW
Q243
SW
Q306
ACK DET
Q307
COLOR,B/W SW
Q220,221
PB 4.9V SW
Q231
PEAKING AMP
Q232
EQ
Q248
DO DET LEVEL SW
Q303
BUFF
C.BPF
C.E.
K IN 6 AA
K OUT 3 AB
K OUT 4 AC
LANC DC AD
LANC AE
SP CS AG
FADER CONT AH
CAM/LINE AK
VA PB MODE AL
RF SWP AM
SP/LP AO
AUDIO GND AP
AUDIO 4.9V AQ
REC AFM RF AR
PB AFM 1.5M AT
4.43M FSC OUT AV
AUDIO L OUT AY
AUDIO MIX OUT AZ
HIFI/WIND BA
SS G BD
JOG BH
CHASSIS
SS GND
CAM CS
DATA TO MASTER
DATA TO SLVE
SCK

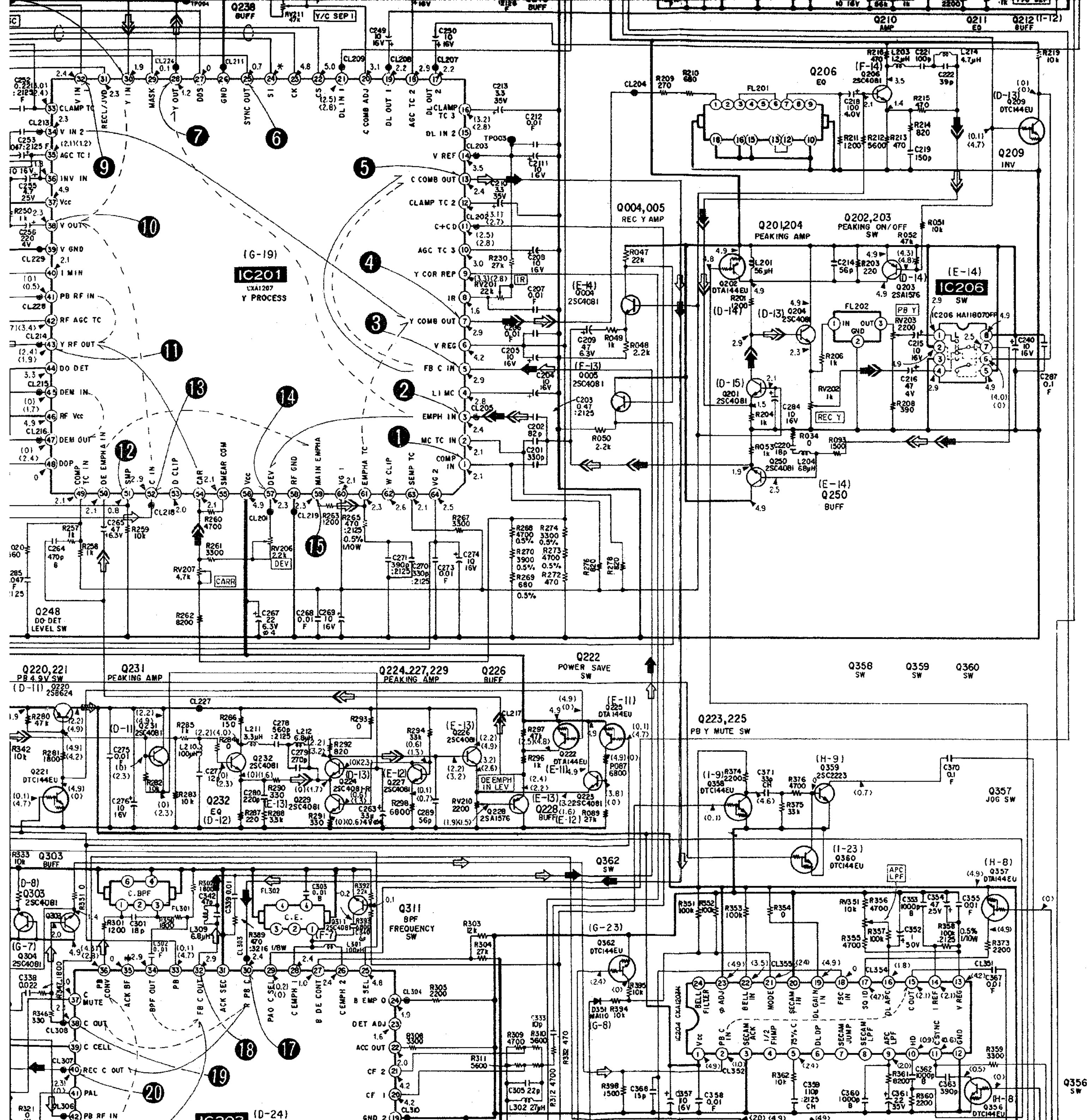

IC201
CXA1207
Y PROCESS
(G-19)
IC206
HA11807OFP
(E-14)
Q206
EQ
Q209
INV
Q210
AMP
Q211
EQ
Q212
BUFF
Q238
BUFF
Q004,005
REC Y AMP
Q201,204
PEAKING AMP
Q202,203
PEAKING ON/OFF SW
Q250
BUFF
Q248
DO DET LEVEL SW
Q220,221
PB 4.9V SW
Q231
PEAKING AMP
Q224,227,229
PEAKING AMP
Q226
BUFF
Q222
POWER SAVE SW
Q223,225
PB Y MUTE SW
Q358
SW
Q359
SW
Q360
SW
Q357
JOG SW
Q362
SW
Q303
BUFF
Q311
BPF FREQUENCY SW
Q356
SW
FL201
FL202
FL301
FL302
C.BPF
C.E.

VA-67 BOARD

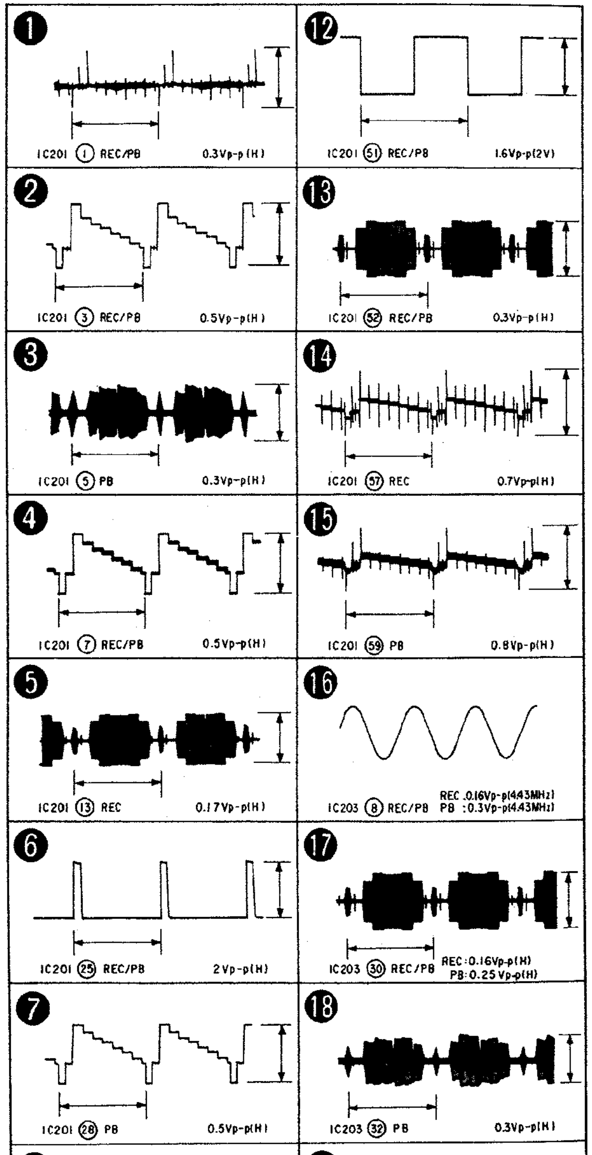

IC201 ① REC/PB 0.3Vp-p(H)
IC201 ③ REC/PB 0.5Vp-p(H)
IC201 ⑤ PB 0.3Vp-p(H)
IC201 ⑦ REC/PB 0.5Vp-p(H)
IC201 ⑬ REC 0.17Vp-p(H)
IC201 ㉕ REC/PB 2Vp-p(H)
IC201 ㉘ PB 0.5Vp-p(H)
IC201 ㊿ REC/PB 1.6Vp-p(2V)
IC201 ㊼ REC/PB 0.3Vp-p(H)
IC201 ㊼ REC 0.7Vp-p(H)
IC201 59 PB 0.8Vp-p(H)
IC203 ⑧ REC/PB REC 0.16Vp-p(4.43MHz) PB :0.3Vp-p(4.43MHz)
IC203 ㉚ REC/PB REC:0.16Vp-p(H) PB:0.25Vp-p(H)
IC203 ㉜ PB 0.3Vp-p(H)

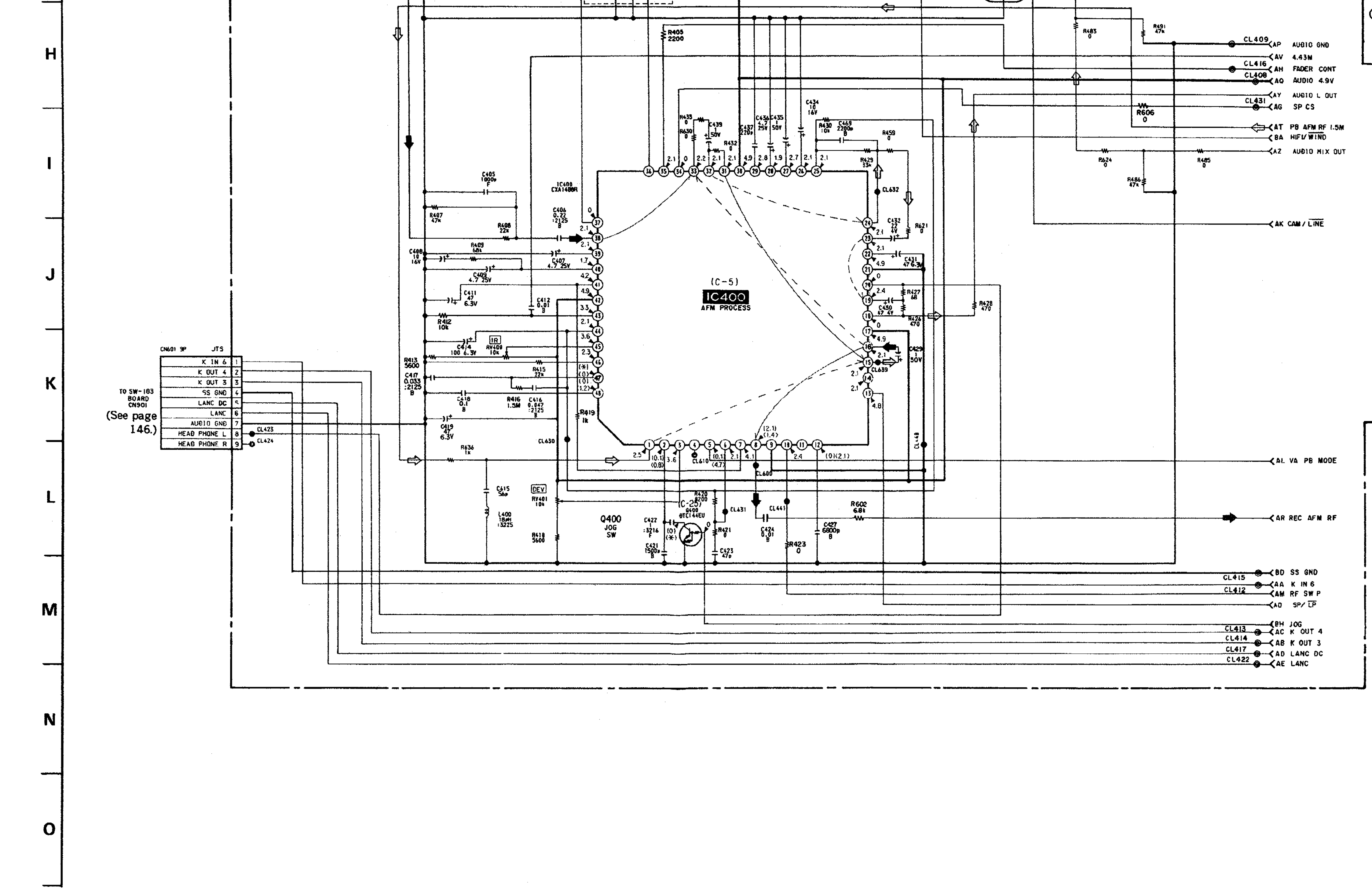

IC400
AFM PROCESS
(C-5)
IC400 CXA1488R
Q400 JOG SW
CN601 9P
K IN 6
K OUT 4
K OUT 3
SS GND
LANC DC
LANC
AUDIO GND
HEAD PHONE L
HEAD PHONE R
TO SW-183 BOARD CN901
(See page 146.)
AP AUDIO GND
AV 4.43M
AH FADER CONT
AQ AUDIO 4.9V
AY AUDIO L OUT
AG SP CS
AT PB AFM RF 1.5M
BA HIFI/WIND
AZ AUDIO MIX OUT
AK CAM/LINE
AL VA PB MODE
AR REC AFM RF
BD SS GND
AA K IN 6
AM RF SW P
AO SP/LP
BH JOG
AC K OUT 4
AB K OUT 3
AD LANC DC
AE LANC

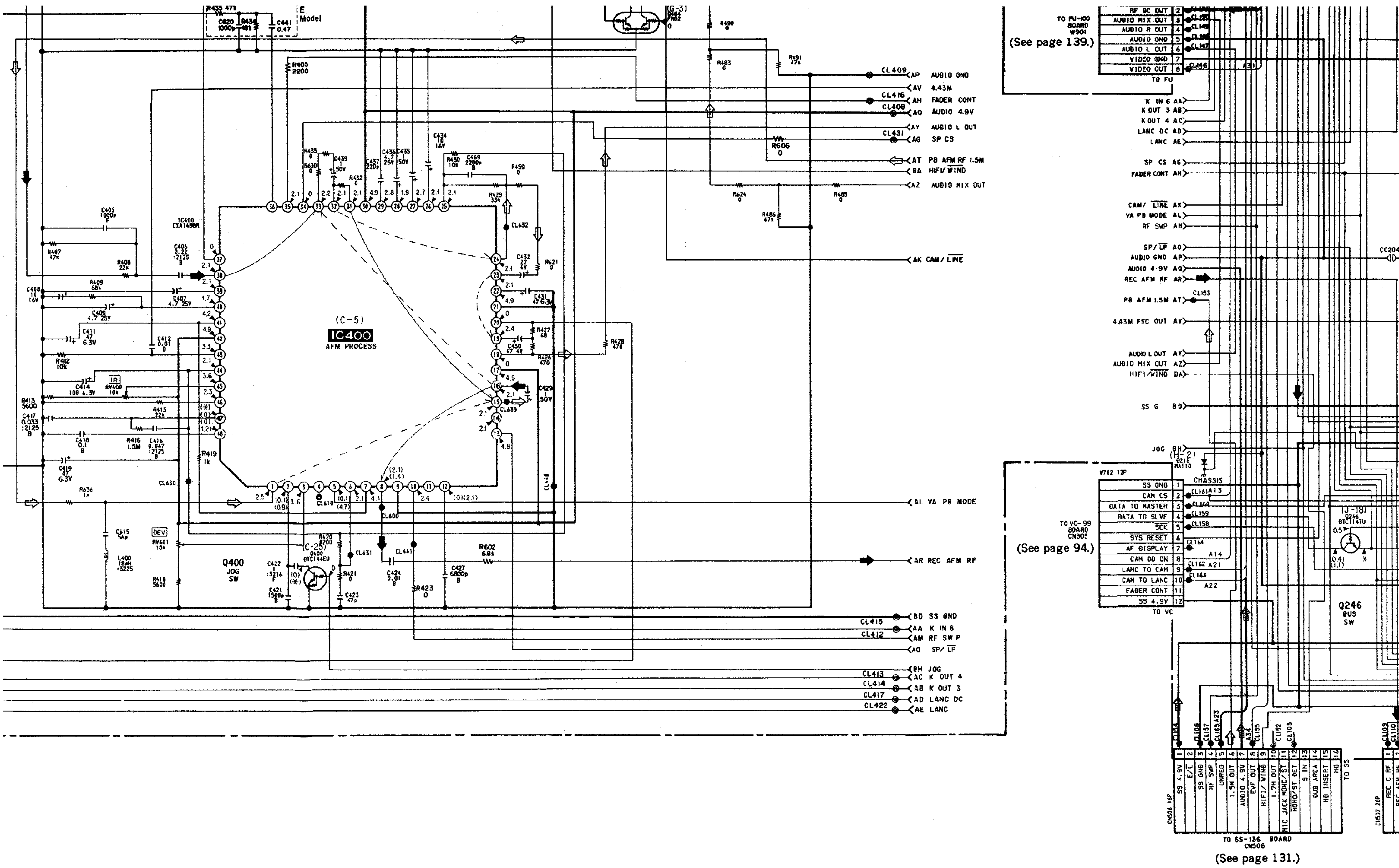

VIDEO/AUDIO VIDEO/AUDIO

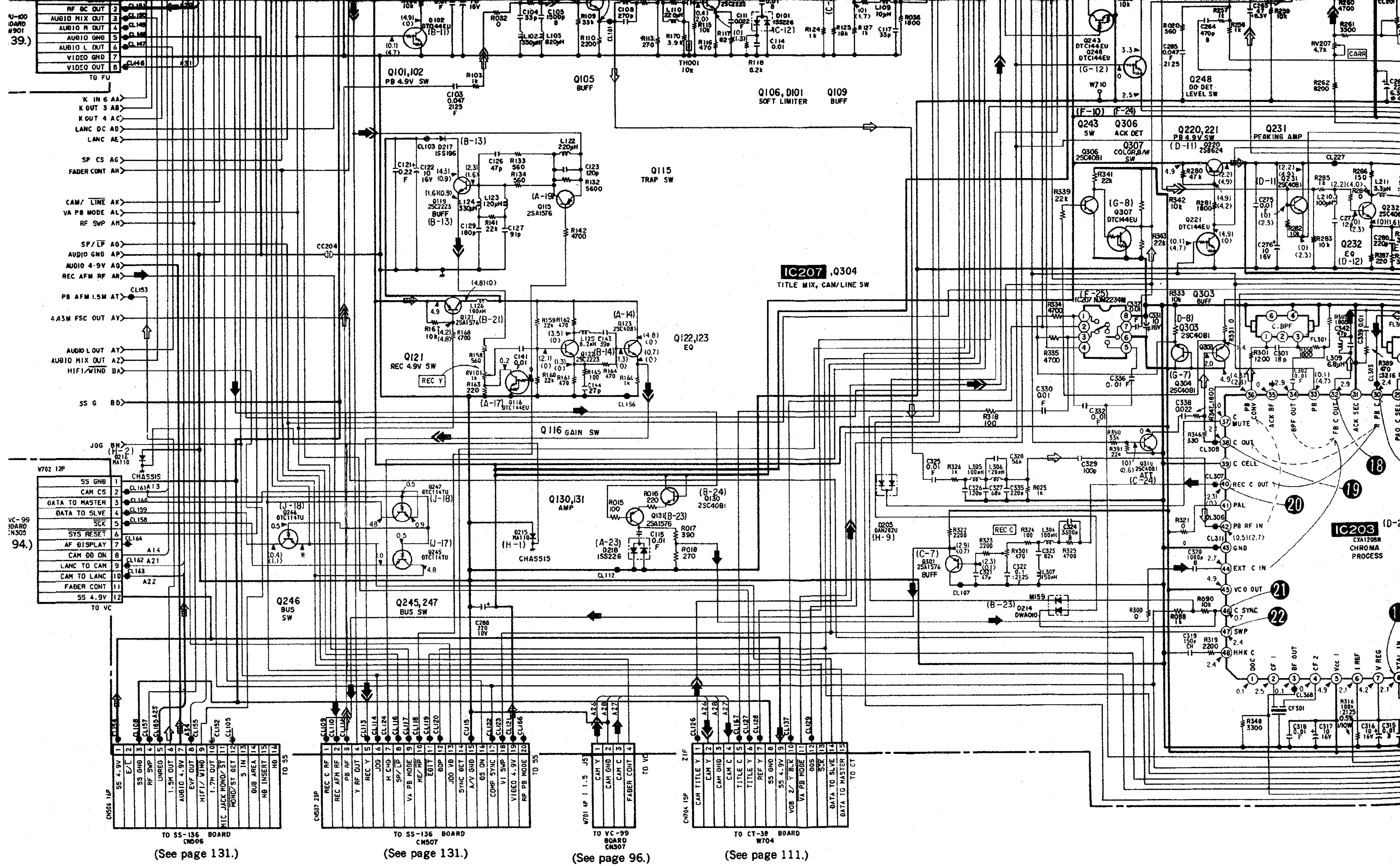

Q101,102 PB 4.9V SW
Q105 BUFF
Q106, D101 SOFT LIMITER
Q109 BUFF
Q115 TRAP SW
Q121 REC 4.9V SW
Q122,123 EQ
Q116 GAIN SW
Q130,131 AMP
Q246 BUS SW
Q245,247 BUS SW
IC207 ,Q304 TITLE MIX, CAM/LINE SW
IC203 CXA1208R CHROMA PROCESS
Q243 SW
Q306 ACK DET
Q307 COLOR,B/W SW
Q220,221 PB 4.9V SW
Q231 PEAKING AMP
Q232 EQ
Q248 DO DET LEVEL SW
Q303 BUFF
V702 12P
TO VC
TO FU
TO SS-136 BOARD CN506
(See page 131.)
TO SS-136 BOARD CN507
(See page 131.)
TO VC-99 BOARD CN307
(See page 96.)
TO CT-38 BOARD W704
(See page 111.)

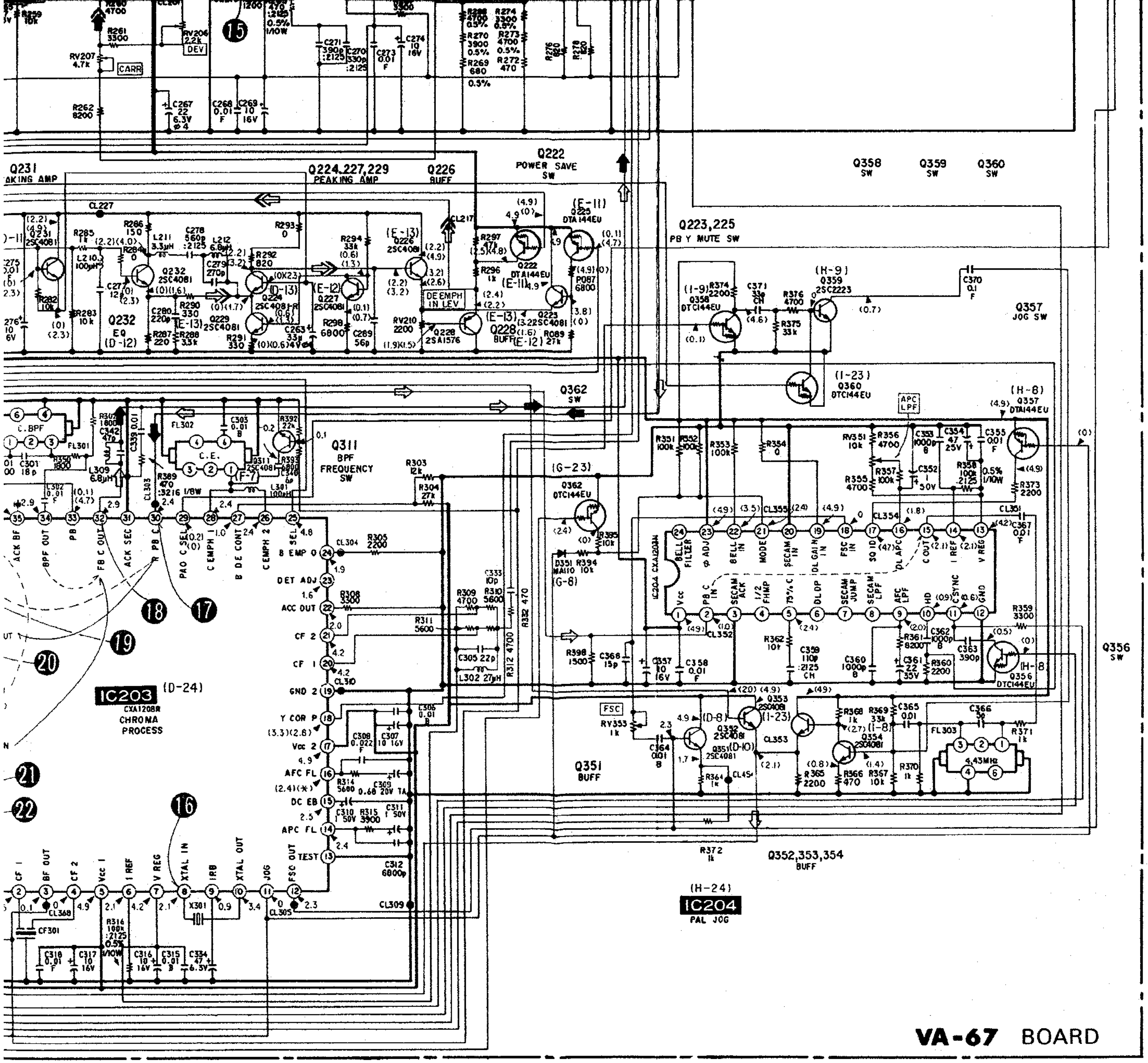
VA-67 BOARD
IC203 (D-24)
CXA1208R
CHROMA PROCESS
(H-24)
IC204
PAL JOG
Q231
Q224,227,229
PEAKING AMP
Q226
BUFF
Q222
POWER SAVE SW
Q223,225
PB Y MUTE SW
Q232
EQ
(D-12)
Q358 SW
Q359 SW
Q360 SW
Q357
JOG SW
Q362
SW
Q311
BPF FREQUENCY SW
Q351
BUFF
Q352,353,354
BUFF
Q356
SW

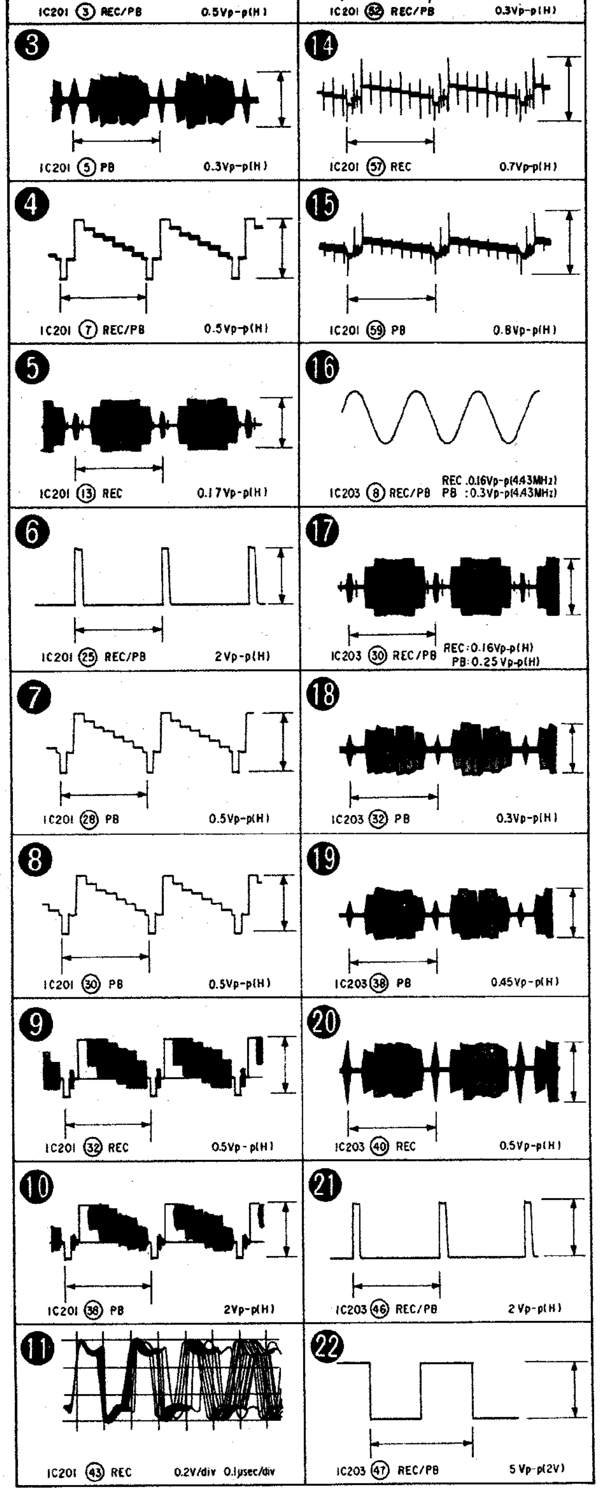
IC201 ③ REC/PB 0.5Vp-p(H)
IC201 ㊿ REC/PB 0.3Vp-p(H)
IC201 ⑤ PB 0.3Vp-p(H)
IC201 ㊲ REC 0.7Vp-p(H)
IC201 ⑦ REC/PB 0.5Vp-p(H)
IC201 59 PB 0.8Vp-p(H)
IC201 ⑬ REC 0.17Vp-p(H)
IC203 ⑧ REC/PB REC: 0.16Vp-p(4.43MHz) PB: 0.3Vp-p(4.43MHz)
IC201 ㉕ REC/PB 2Vp-p(H)
IC203 ㉚ REC/PB REC: 0.16Vp-p(H) PB: 0.25Vp-p(H)
IC201 ㉘ PB 0.5Vp-p(H)
IC203 ㉜ PB 0.3Vp-p(H)
IC201 ㉚ PB 0.5Vp-p(H)
IC203 ㊳ PB 0.45Vp-p(H)
IC201 ㉜ REC 0.5Vp-p(H)
IC203 ㊵ REC 0.5Vp-p(H)
IC201 ㊳ PB 2Vp-p(H)
IC203 ㊻ REC/PB 2Vp-p(H)
IC201 ㊸ REC 0.2V/div 0.1μsec/div
IC203 ㊼ REC/PB 5Vp-p(2V)

VA-67 (VIDEO/AUDIO) PRINTED WIRING BOARD
—Ref. No. VA-67 BOARD: 2000 series—

VA-67 BOARD (CONDUCTOR SIDE)

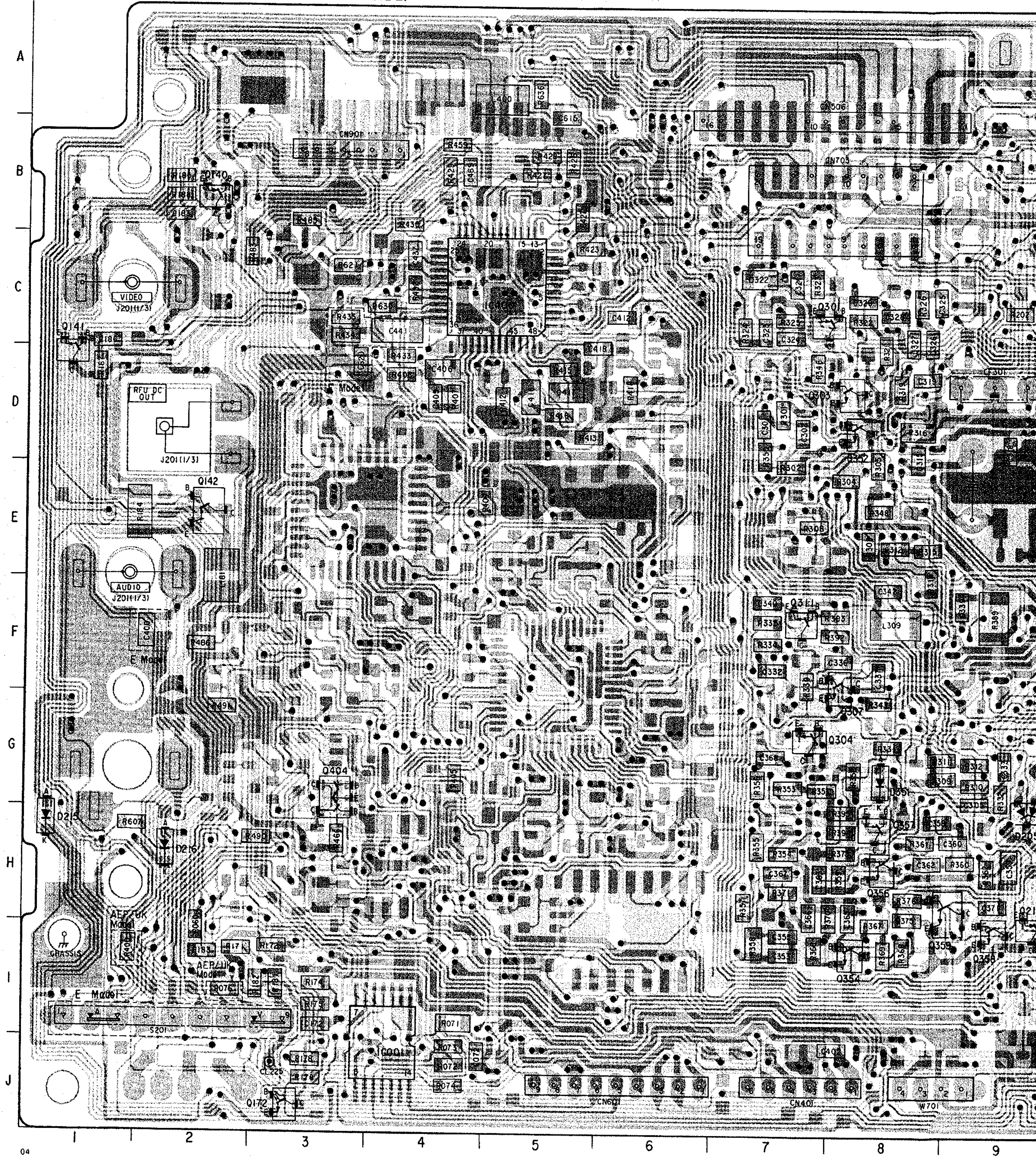

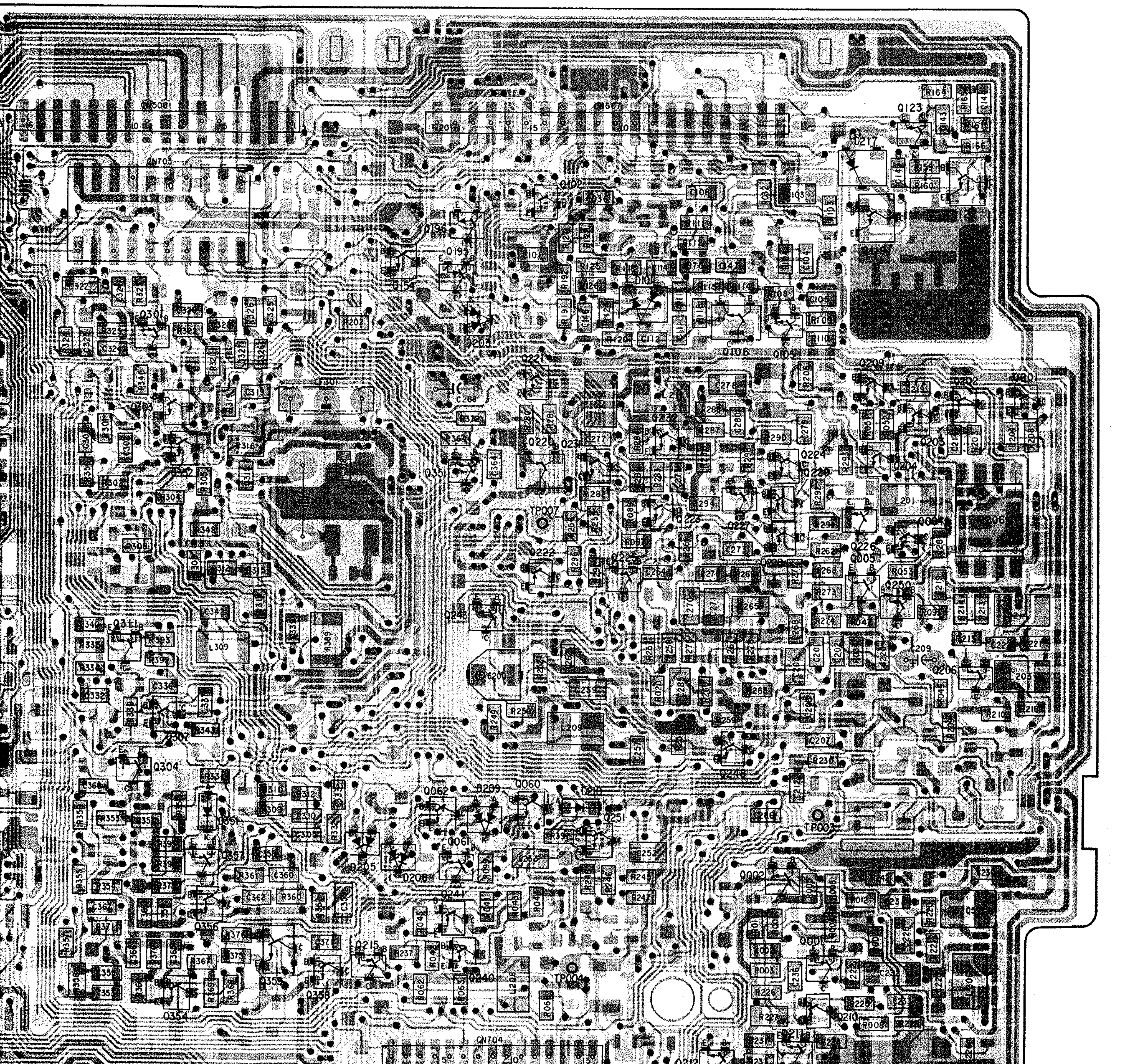

7
8
9
10
11
12
13
14
15
CN703
CN704
CN401
W701
W702
TP007
TP004
TP003

VA-67 BOARD (COMPONENT SIDE)

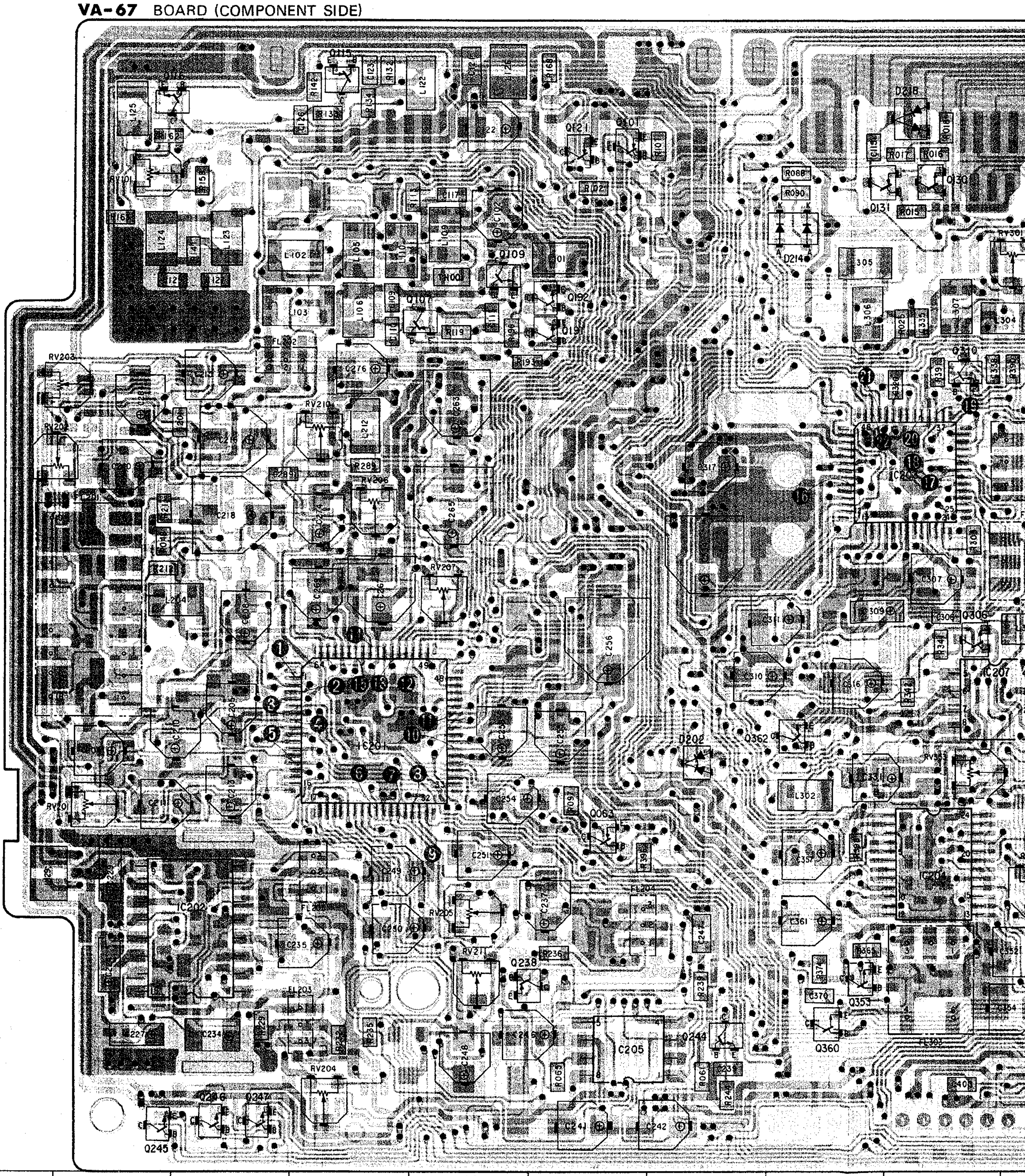

16 17 18 19 20 21 22 23 24

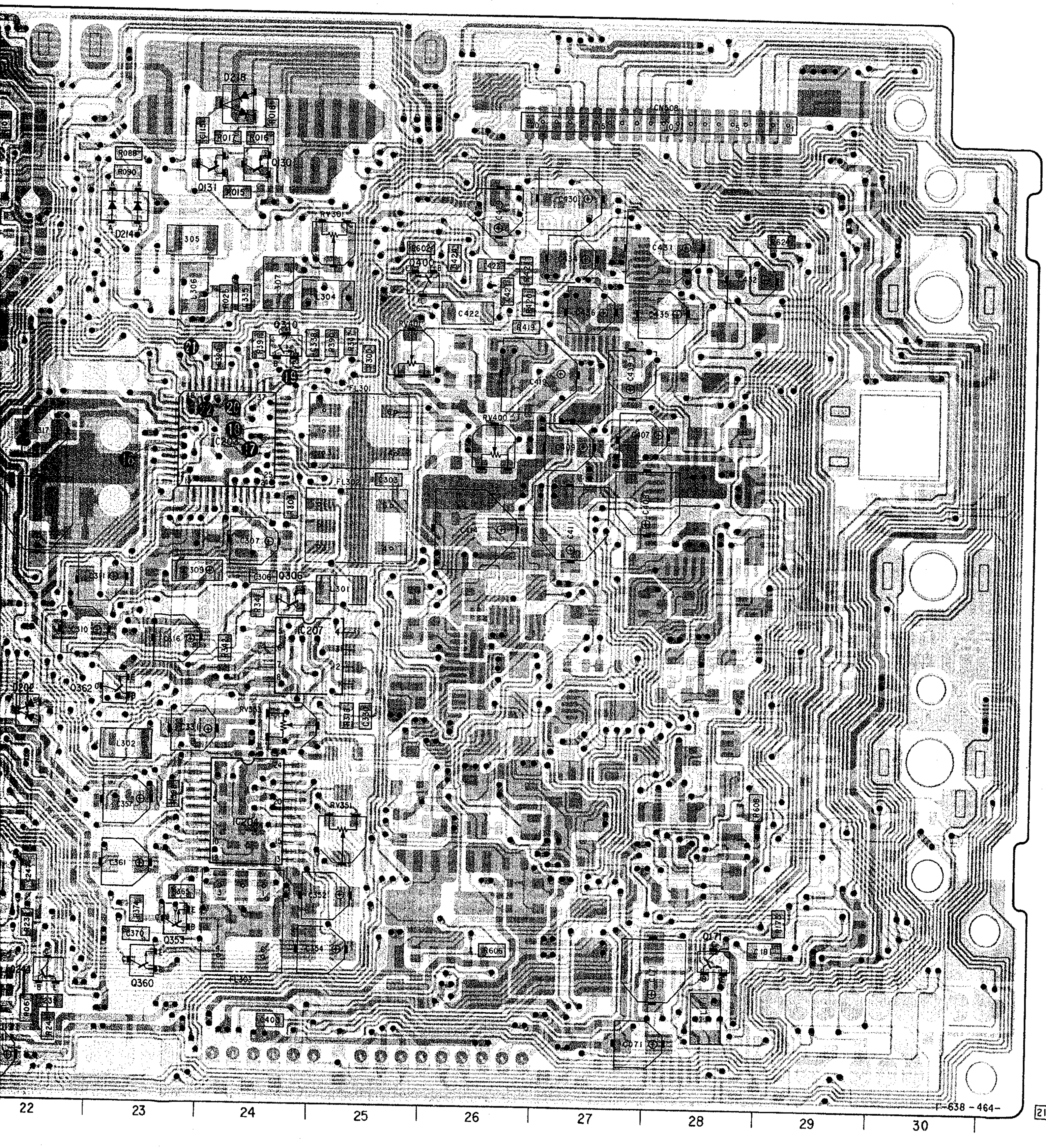

CN508
D218
Q131
Q130
D214
RV301
L304
L306
Q310
FL301
FL302
FL303
IC207
IC204
RV351
RV400
RV401
C422
C411
C307
C357
C361
C351
L302
Q360
Q353
Q362
Q171
C071
1-638-464-
22
23
24
25
26
27
28
29
30

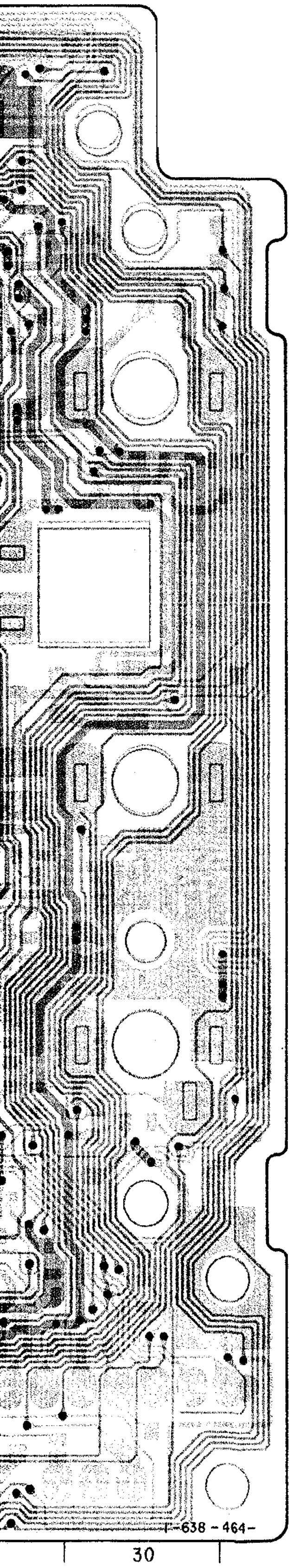

21

< DIODE >

D101	8-719-800-76	1SS226
D202	8-719-941-86	DAN202U
D203	8-719-941-86	DAN202U
D205	8-719-941-86	DAN202U
D208	8-719-941-86	DAN202U
D209	8-719-941-86	DAN202U
D210	8-719-404-46	MA110
D214	8-719-940-45	DWA010
D215	8-719-404-46	MA110
D216	8-719-404-46	MA110
D217	8-719-801-41	1SS196
D218	8-719-800-76	1SS226
D351	8-719-404-46	MA110

< IC >

IC001	8-759-999-02	TL1596CDB
IC201	8-752-036-19	CXA1207R
IC202	8-752-333-24	CXL1506M
IC203	8-752-036-20	CXA1208R
IC204	8-759-605-61	CXA1203N
IC205	8-759-710-29	NJM2235M
IC206	8-759-320-76	HA118070FP
IC207	8-759-710-07	NJM2234M
IC400	8-759-823-20	CXA-1488R

< TRANSISTOR >

Q001	8-729-905-23	2SA1576-R
Q002	8-729-905-35	2SC4081-R
Q004	8-729-905-35	2SC4081-R
Q005	8-729-905-35	2SC4081-R
Q060	8-729-905-18	DTC144EU
Q061	8-729-905-18	DTC144EU
Q062	8-729-905-18	DTC144EU
Q063	8-729-905-12	DTA144EU
Q101	8-729-905-23	2SA1576-R
Q102	8-729-905-18	DTC144EU
Q105	8-729-905-35	2SC4081-R
Q106	8-729-102-07	2SC2223-F13
Q107	8-729-905-12	DTA144EU
Q109	8-729-905-35	2SC4081-R
Q115	8-729-905-23	2SA1576-R
Q116	8-729-905-18	DTC144EU
Q119	8-729-102-07	2SC2223-F13
Q121	8-729-905-23	2SA1576-R
Q122	8-729-102-07	2SC2223-F13
Q123	8-729-905-35	2SC4081-R
Q130	8-729-905-35	2SC4081-R
Q131	8-729-905-23	2SA1576-R
Q140	8-729-905-12	DTA144EU
Q141	8-729-905-35	2SC4081-R
Q142	8-729-141-48	2SB624-BV345
Q154	8-729-905-35	2SC4081-R
Q171	8-729-905-35	2SC4081-R
Q172	8-729-905-35	2SC4081-R
Q191	8-729-905-35	2SC4081-R
Q192	8-729-905-18	DTC144EU
Q195	8-729-905-12	DTA144EU
Q196	8-729-905-18	DTC144EU
Q201	8-729-905-35	2SC4081-R
Q202	8-729-905-12	DTA144EU
Q203	8-729-905-23	2SA1576-R
Q204	8-729-905-35	2SC4081-R
Q206	8-729-905-35	2SC4081-R
Q209	8-729-905-18	DTC144EU
Q210	8-729-905-23	2SA1576-R
Q211	8-729-905-35	2SC4081-R
Q212	8-729-905-35	2SC4081-R
Q215	8-729-905-23	2SA1576-R
Q220	8-729-141-48	2SB624-BV345
Q221	8-729-905-18	DTC144EU
Q222	8-729-905-12	DTA144EU
Q223	8-729-905-35	2SC4081-R
Q224	8-729-905-35	2SC4081-R
Q225	8-729-905-12	DTA144EU
Q226	8-729-905-35	2SC4081-R
Q227	8-729-905-35	2SC4081-R
Q228	8-729-905-23	2SA1576-R
Q229	8-729-905-35	2SC4081-R
Q231	8-729-905-35	2SC4081-R
Q232	8-729-905-35	2SC4081-R
Q238	8-729-905-23	2SA1576-R
Q240	8-729-905-35	2SC4081-R
Q241	8-729-905-23	2SA1576-R
Q243	8-729-905-18	DTC144EU
Q244	8-729-905-18	DTC144EU
Q245	8-729-905-XX	DTC114TU
Q246	8-729-905-XX	DTC114TU
Q247	8-729-905-XX	DTC114TU
Q248	8-729-905-18	DTC144EU
Q250	8-729-905-35	2SC4081-R
Q251	8-729-905-18	DTC144EU
Q301	8-729-905-23	2SA1576-R
Q303	8-729-905-35	2SC4081-R
Q304	8-729-905-35	2SC4081-R
Q306	8-729-905-35	2SC4081-R
Q307	8-729-905-18	DTC144EU
Q310	8-729-905-35	2SC4081-R
Q311	8-729-905-35	2SC4081-R
Q351	8-729-905-35	2SC4081-R
Q352	8-729-905-35	2SC4081-R
Q353	8-729-905-35	2SC4081-R
Q354	8-729-905-35	2SC4081-R
Q356	8-729-905-18	DTC144EU
Q357	8-729-905-12	DTA144EU
Q358	8-729-905-18	DTC144EU
Q359	8-729-102-08	2SC2223-F14
Q360	8-729-905-18	DTC144EU
Q362	8-729-905-18	DTC144EU
Q400	8-729-905-18	DTC144EU
Q404	8-729-904-07	FMG2

CC-61 (RELAY), SS-136 (SERVO/SYSTEM CONTROL),FP-89, FP-90 (MECHADECK I
—Ref. No. CC-61 and SS-136 BOARDS : 3000 series, FP-89 and FP-90 BOARDS : 8000 series

< DIODE >		
D501	8-719-941-86	DAN202U
D506	8-719-941-86	DAN202U
D510	8-719-404-46	MA110
D901	8-719-938-75	SB05-05CP
D902	8-719-938-75	SB05-05CP
D903	8-719-938-78	SB10-05PCP
< IC >		
IC501	8-752-818-70	CXP80116-830Q
IC502	8-759-148-05	CXA8010M
IC503	8-759-990-55	CXA8006M
IC504	8-759-805-06	CXA1127M
IC506	8-752-035-48	CXA1204Q
IC507	8-759-998-92	LM393D
IC508	8-759-748-65	BR93CS46F
IC901	8-759-500-42	MB3783PFV
< TRANSISTOR >		
Q400	8-729-905-35	2SC4081-R
Q401	8-729-905-35	2SC4081-R
Q402	8-729-905-35	2SC4081-R
Q502	8-729-905-35	2SC4081-R
Q503	8-729-905-24	2SA1576-S
Q505	8-729-905-35	2SC4081-R
Q506	8-729-905-24	2SA1576-S
Q507	8-729-905-35	2SC4081-R
Q508	8-729-905-24	2SA1576-S
Q509	8-729-905-35	2SC4081-R
Q510	8-729-905-35	2SC4081-R
Q511	8-729-905-24	2SA1576-S
Q512	8-729-907-00	DTC114EU
Q513	8-729-905-35	2SC4081-R
Q514	8-729-905-35	2SC4081-R
Q515	8-729-905-18	DTC144EU
Q516	8-729-905-18	DTC144EU
Q540	8-729-822-48	FC101
Q901	8-729-805-25	2SB1121
Q902	8-729-805-25	2SB1121
Q903	8-729-805-25	2SB1121
Q904	8-729-820-47	2SB1202FAT
Q905	8-729-905-35	2SC4081-R

SS-136 BOARD (COMPONENT SIDE)

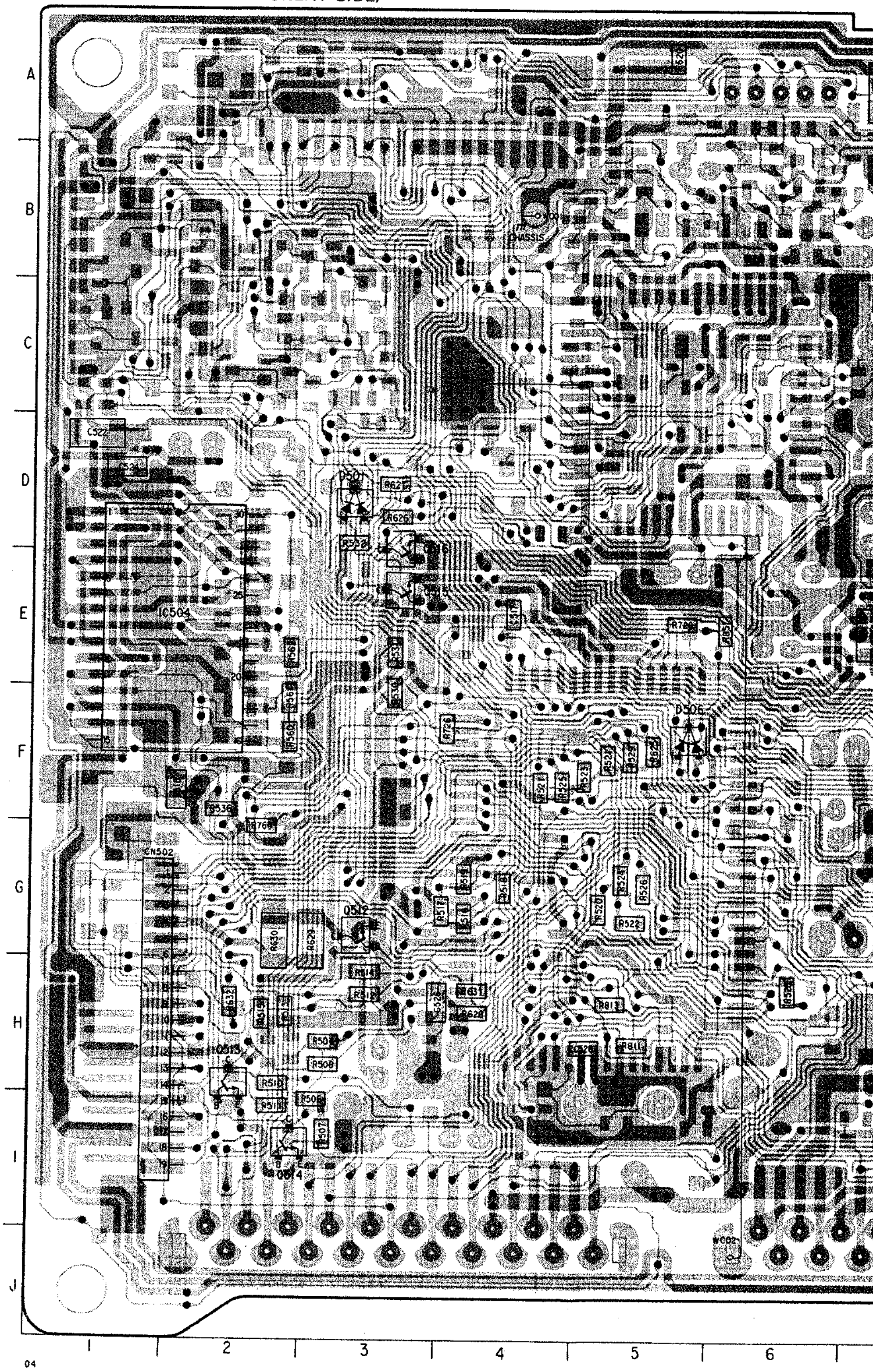

04

O/SYSTEM CONTROL),FP-89, FP-90 (MECHADECK FLEXIBLE) **PRINTED WIRING BOARDS**

RDS : 3000 series, FP-89 and FP-90 BOARDS : 8000 series—

E)

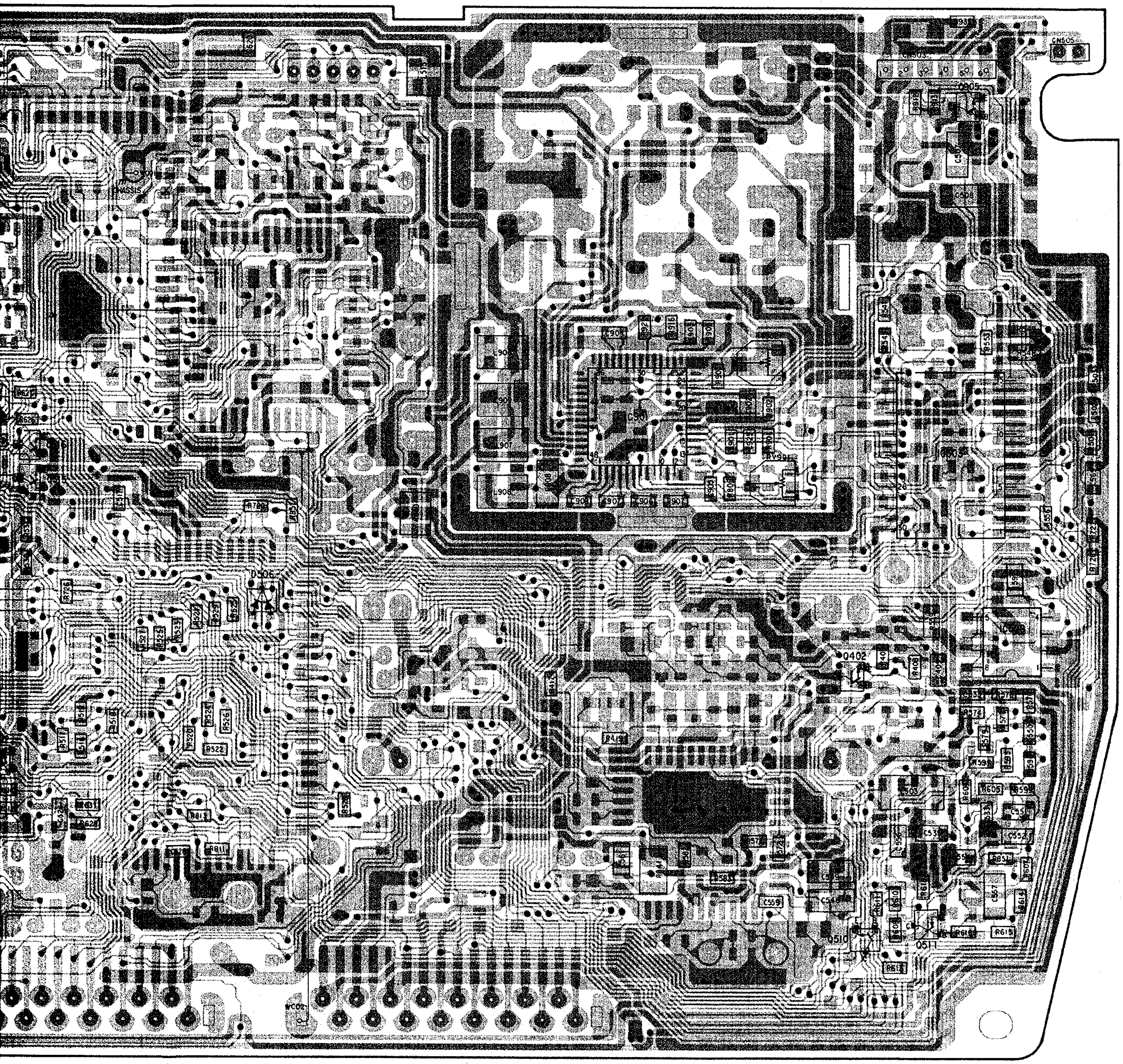

3 | 4 | 5 | 6 | 7 | 8 | 9 | 10 | 11 | 12 | 13

SS-136 BOARD (CONDUCTOR SIDE)

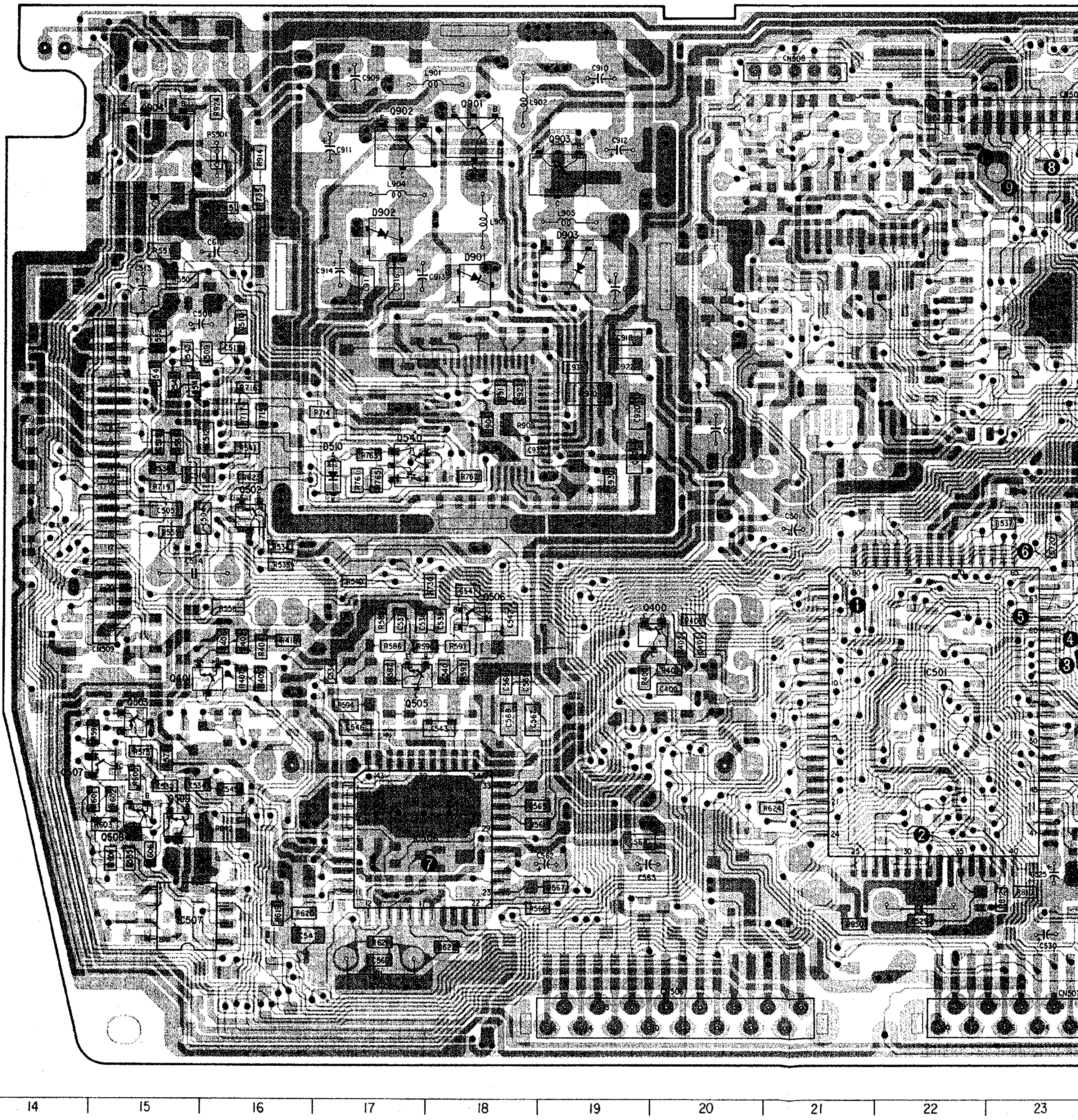

SIDE)

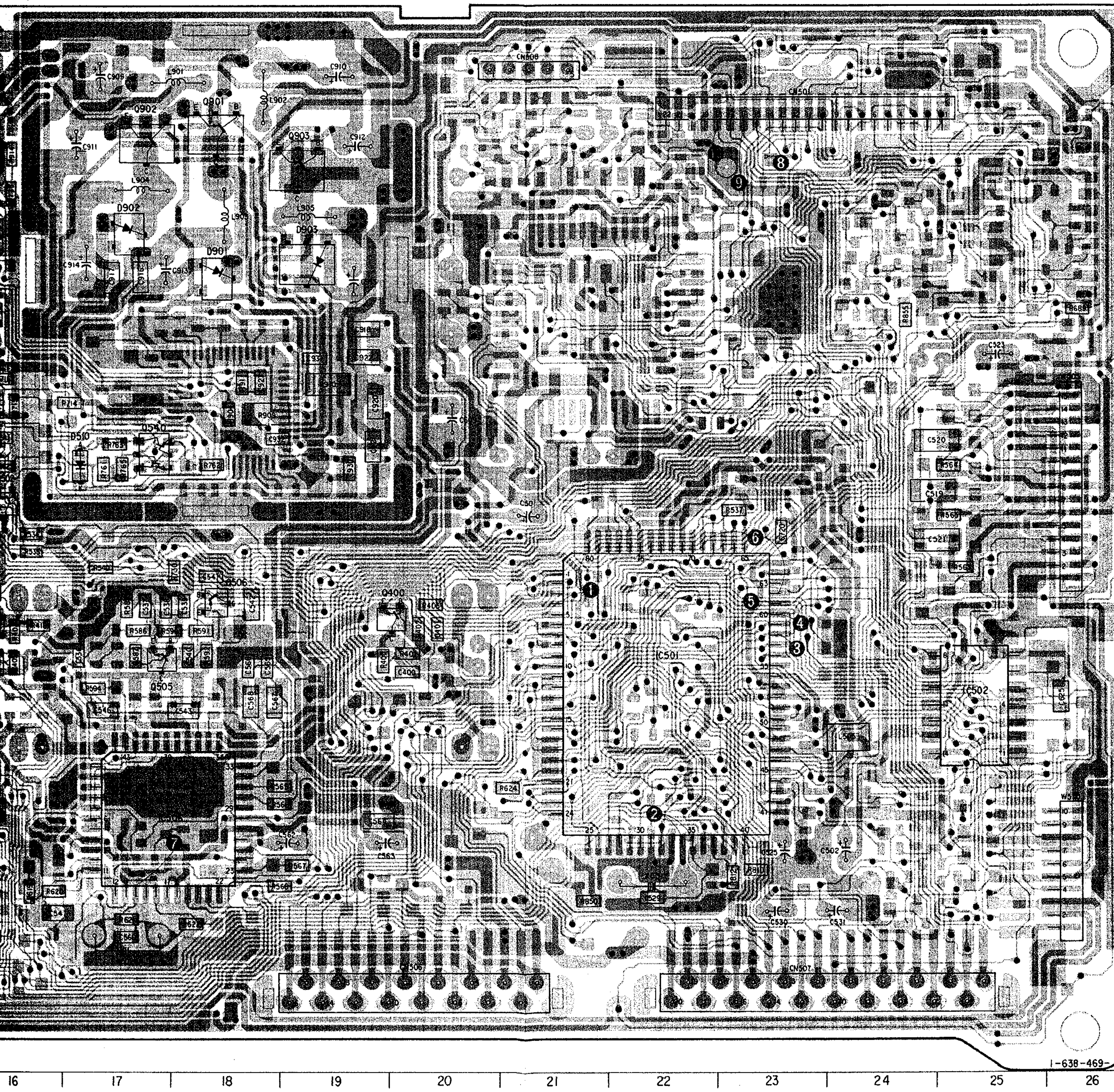

16 17 18 19 20 21 22 23 24 25 26

SERVO/S

CC-61 BOARD

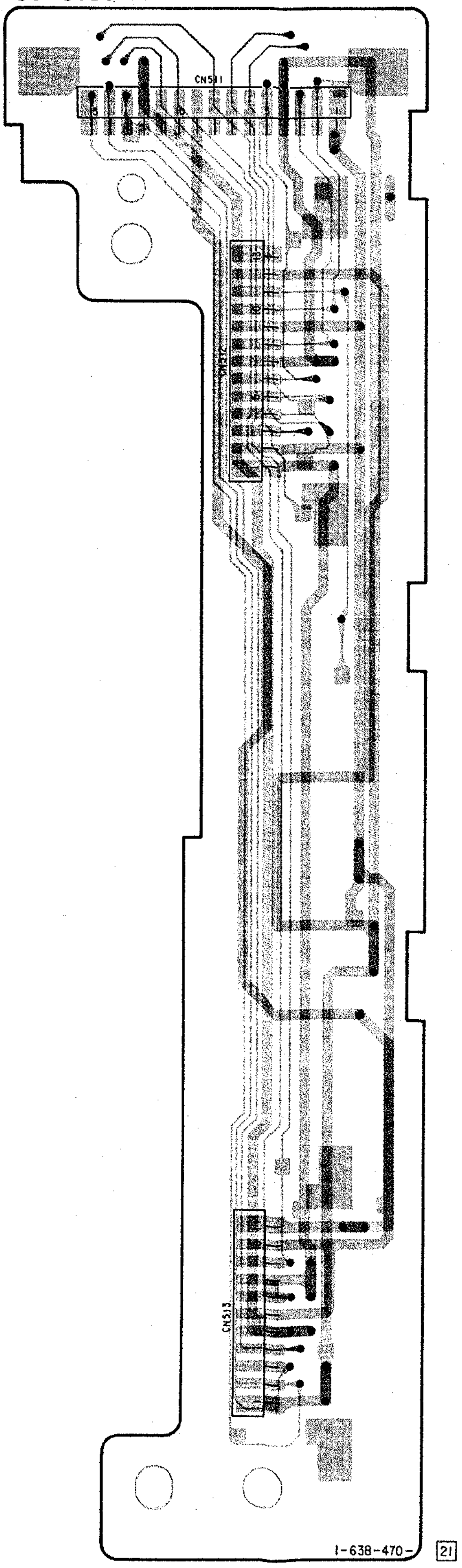

< DIODE >
D301 8-719-820-44 TLP-907-0

< TRANSISTOR >
Q301 8-729-906-48 EE-TP109

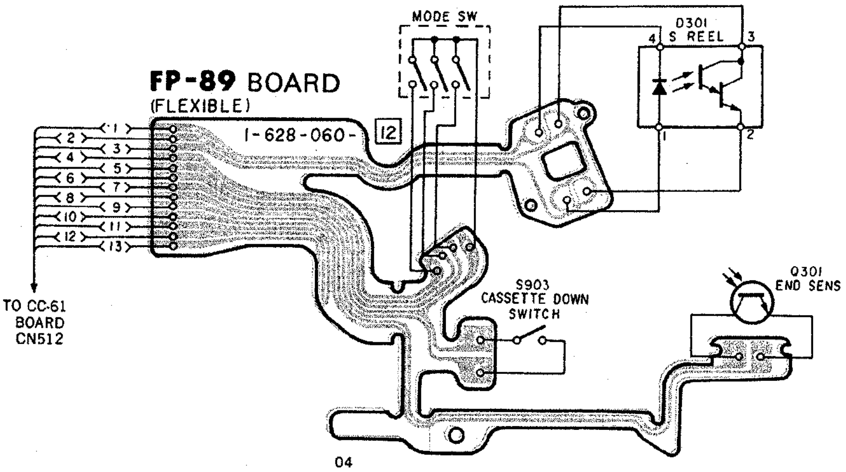

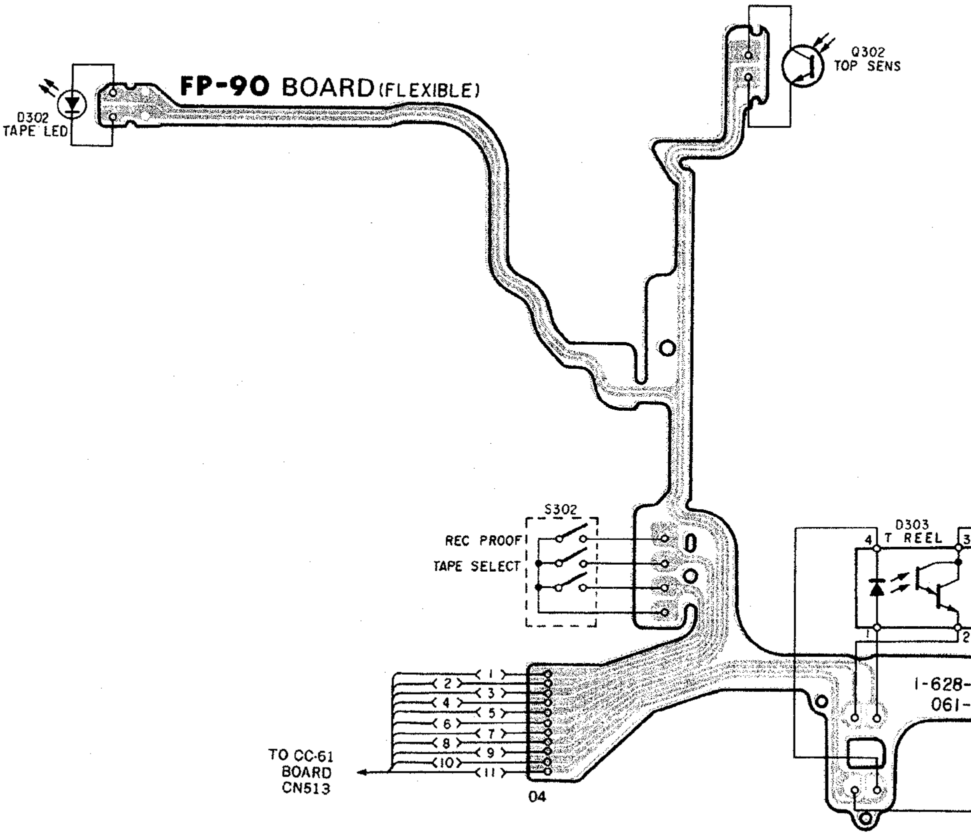

< DIODE >
D302 8-719-940-81 GL452S
D303 8-719-820-44 COUPLER TLP-907-0

< TRANSISTOR >
Q302 8-729-906-48 EE-TP109

< DIODE >
D301 8-719-820-44 TLP-907-0

< TRANSISTOR >
Q301 8-729-906-48 EE-TP109

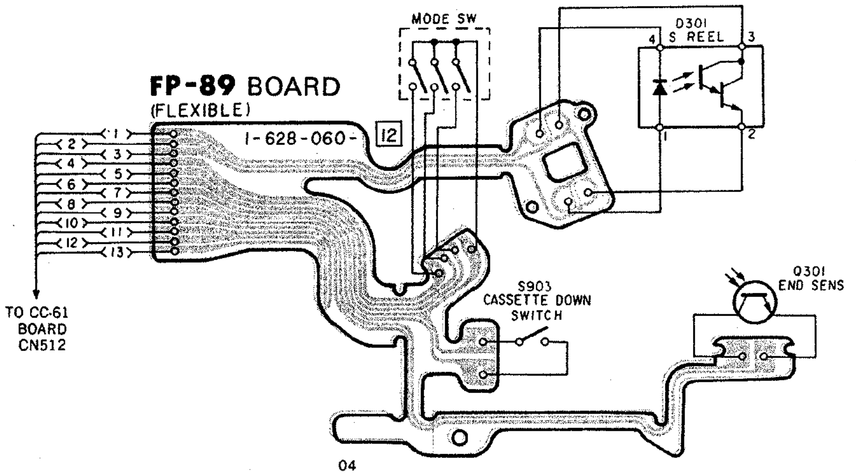

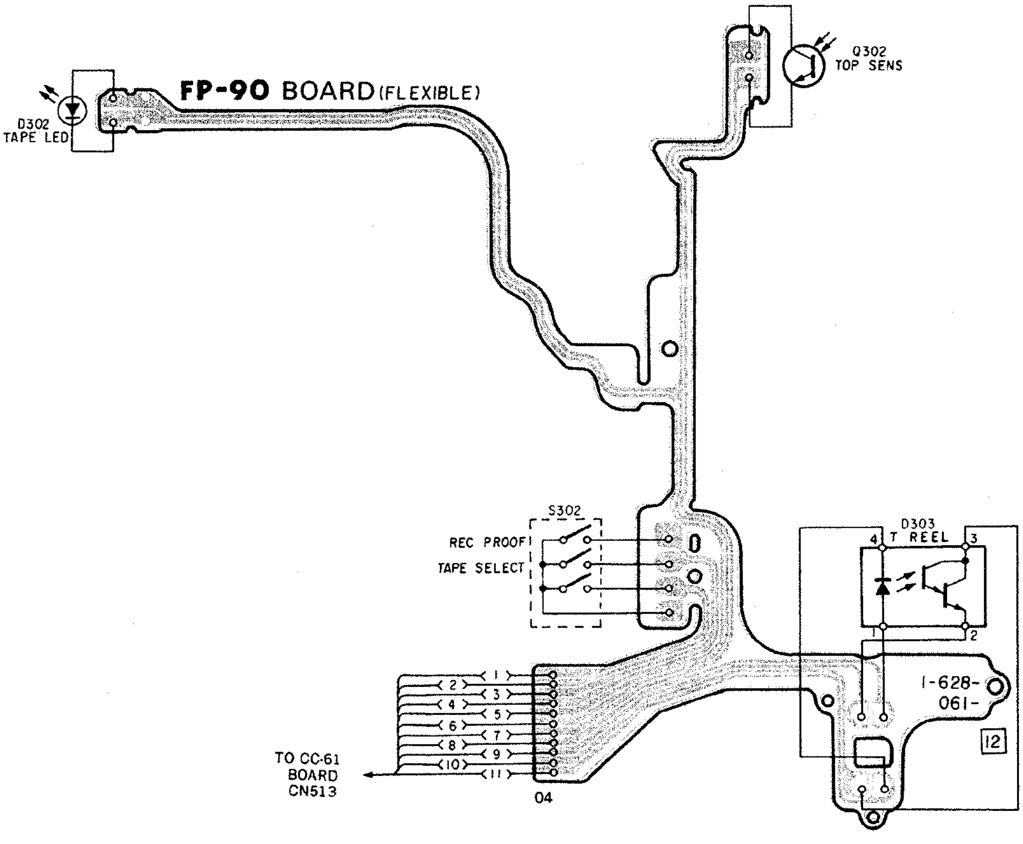

< DIODE >
D302 8-719-940-81 GL452S
D303 8-719-820-44 COUPLER TLP-907-0

< TRANSISTOR >
Q302 8-729-906-48 EE-TP109

21

CC-61 (RELAY), SS-136 (SERVO/SYSTEM CONTROL),FP-89, FP-90 (MECHADECK FLEXIBLE) SCHEMATIC DIAGRAM

—Ref. No. CC-61 and SS-136 BOARDS : 3000 series, FP-89 and FP-90 BOARDS : 8000 series—

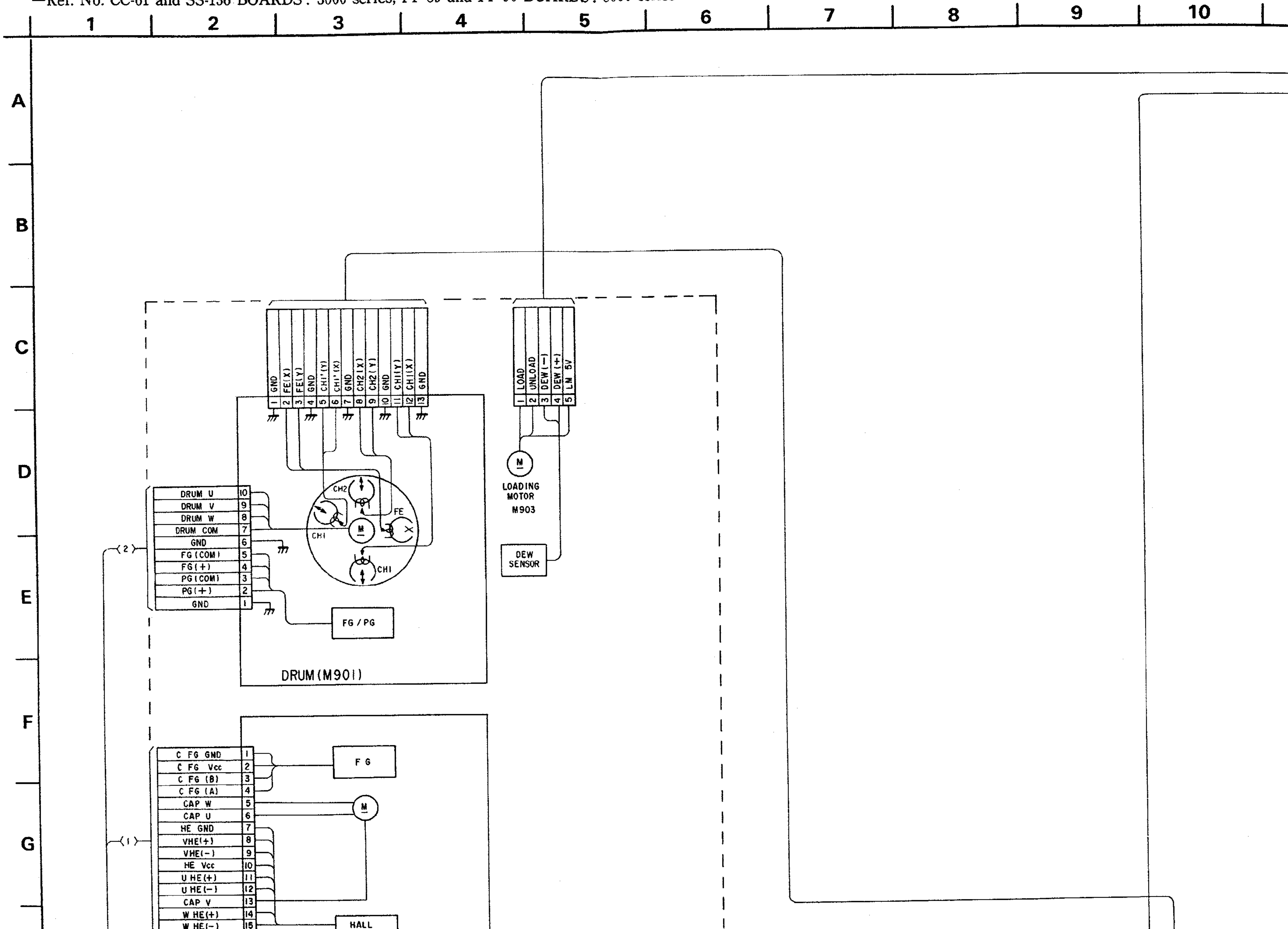

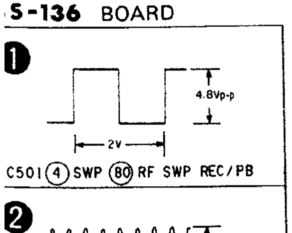

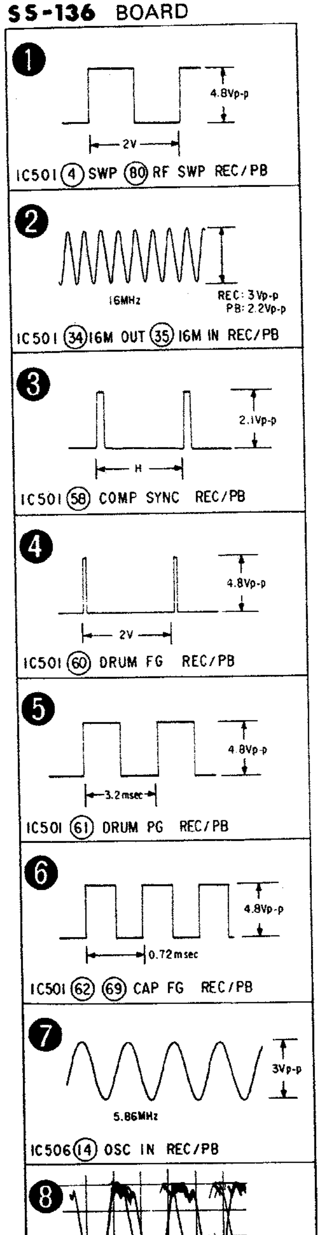
SS-136 BOARD
1
4.8Vp-p
2V
IC501 (4) SWP (80) RF SWP REC/PB
2
16MHz
REC: 3Vp-p
PB: 2.2Vp-p
IC501 (34) 16M OUT (35) 16M IN REC/PB
3
2.1Vp-p
H
IC501 (58) COMP SYNC REC/PB
4
4.8Vp-p
2V
IC501 (60) DRUM FG REC/PB
5
4.8Vp-p
3.2msec
IC501 (61) DRUM PG REC/PB
6
4.8Vp-p
0.72msec
IC501 (62) (69) CAP FG REC/PB
7
3Vp-p
5.86MHz
IC506 (14) OSC IN REC/PB
8

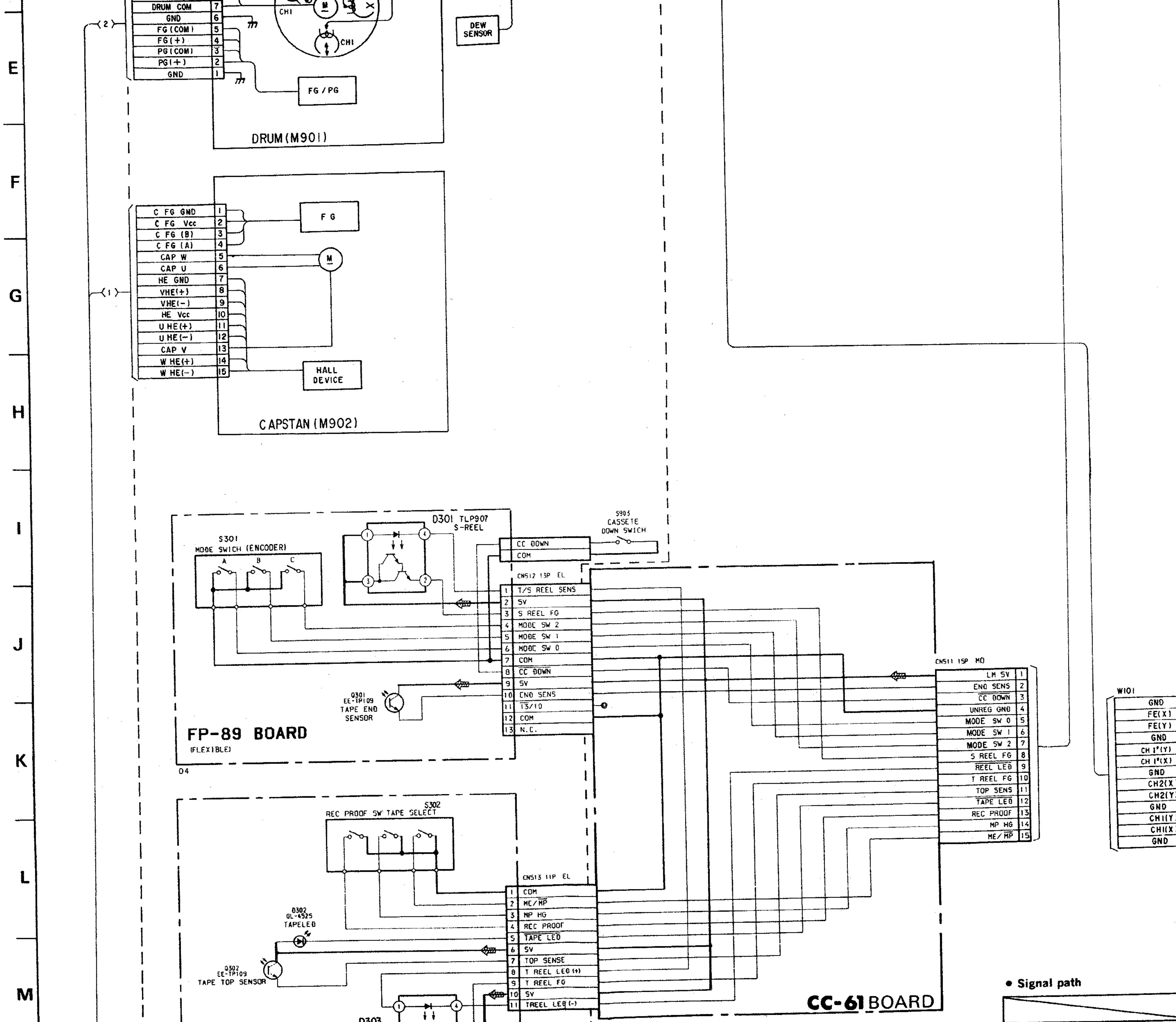
E
F
G
H
I
J
K
L
M
DRUM COM
GND
FG (COM)
FG (+)
PG (COM)
PG (+)
GND
CH1
CH1
DEW SENSOR
FG / PG
DRUM (M901)
C FG GND
C FG Vcc
C FG (B)
C FG (A)
CAP W
CAP U
HE GND
VHE (+)
VHE (−)
HE Vcc
U HE (+)
U HE (−)
CAP V
W HE (+)
W HE (−)
F G
M
HALL DEVICE
CAPSTAN (M902)
S301
MODE SWICH (ENCODER)
D301 TLP907
S-REEL
S905
CASSETE DOWN SWITCH
CC DOWN
COM
CN512 13P EL
T/S REEL SENS
5V
S REEL FG
MODE SW 2
MODE SW 1
MODE SW 0
COM
CC DOWN
5V
END SENS
13/10
COM
N.C.
Q301
EE-TP109
TAPE END SENSOR
FP-89 BOARD
(FLEXIBLE)
CN511 15P MO
LM 5V
END SENS
CC DOWN
UNREG GND
MODE SW 0
MODE SW 1
MODE SW 2
S REEL FG
REEL LED
T REEL FG
TOP SENS
TAPE LED
REC PROOF
MP HG
ME/MP
W101
GND
FE(X)
FE(Y)
GND
CH1'(Y)
CH1'(X)
GND
CH2(X)
CH2(Y)
GND
CH1(Y)
CH1(X)
GND
S302
REC PROOF SW TAPE SELECT
CN513 11P EL
COM
ME/MP
MP HG
REC PROOF
TAPE LED
5V
TOP SENSE
T REEL LED (+)
T REEL FG
5V
TREEL LED (−)
D302
GL-4S25
TAPELED
Q302
EE-TP109
TAPE TOP SENSOR
D303
CC-61 BOARD
• Signal path

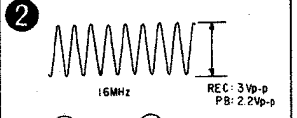

IC501 (34) 16M OUT (35) 16M IN REC/PB

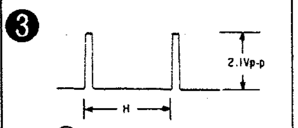

IC501 (58) COMP SYNC REC/PB

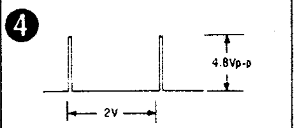

IC501 (60) DRUM FG REC/PB

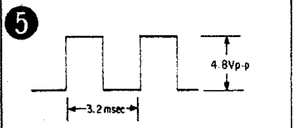

IC501 (61) DRUM PG REC/PB

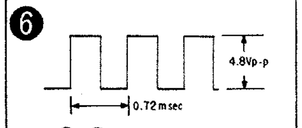

IC501 (62) (69) CAP FG REC/PB

IC506 (14) OSC IN REC/PB

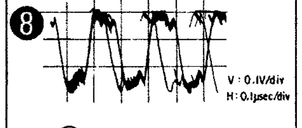

CN501 (15) REC Y RF REC

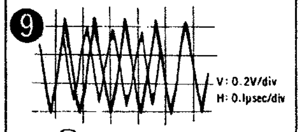

CN501 (16) PB RF OUT PB

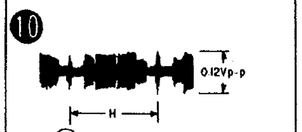

CN501 (18) REC C RF REC

H
I
J
K
L
M
N
O

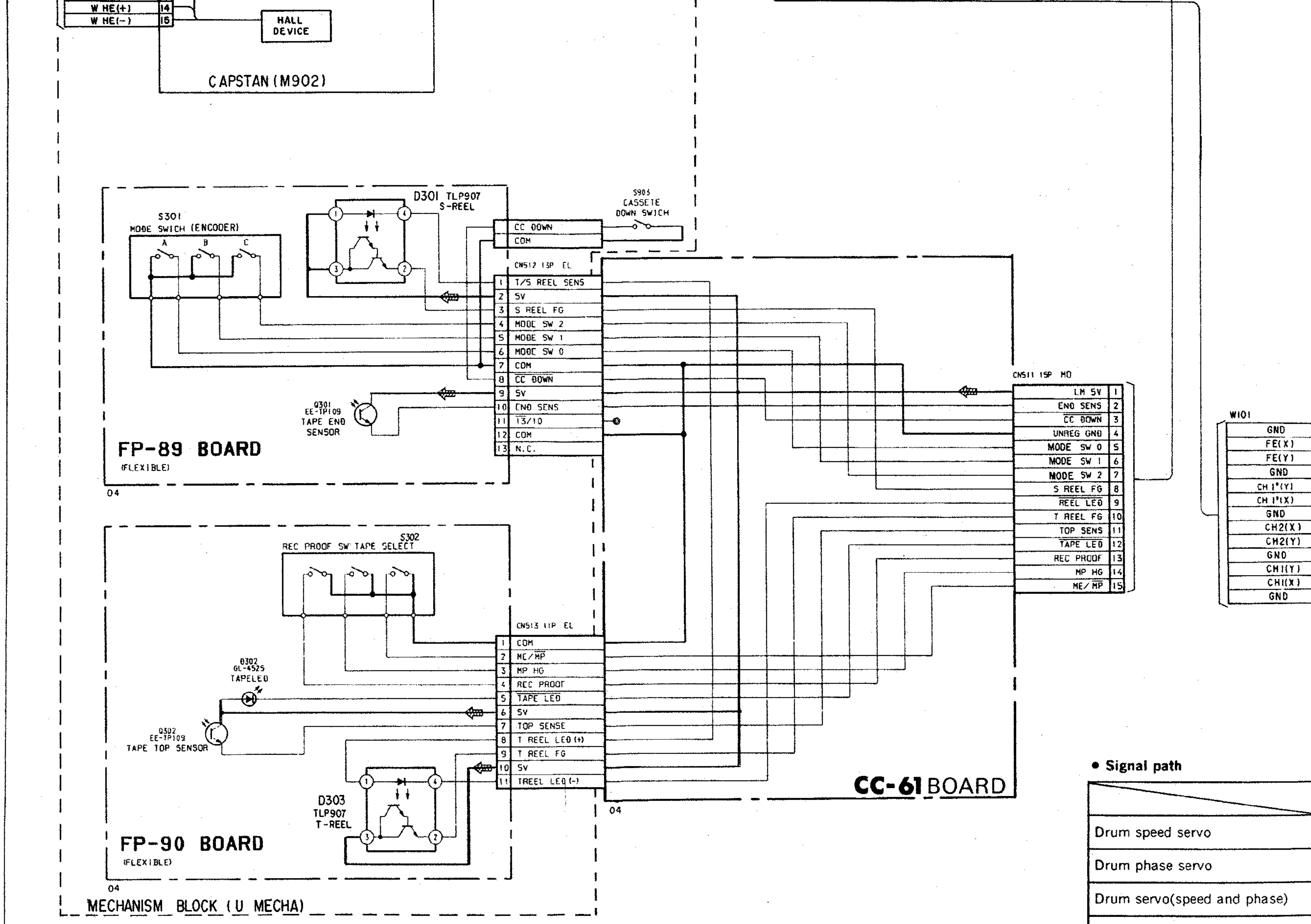

Note: The components identified by mark ⚠ or dotted line with mark ⚠ are critical for safety. Replace only with part number specified.

- **Signal path**

Drum speed servo
Drum phase servo
Drum servo(speed and phase)
Capstan speed servo
Capstan phase servo
Capstan servo(speed and phase)
Ref.signal

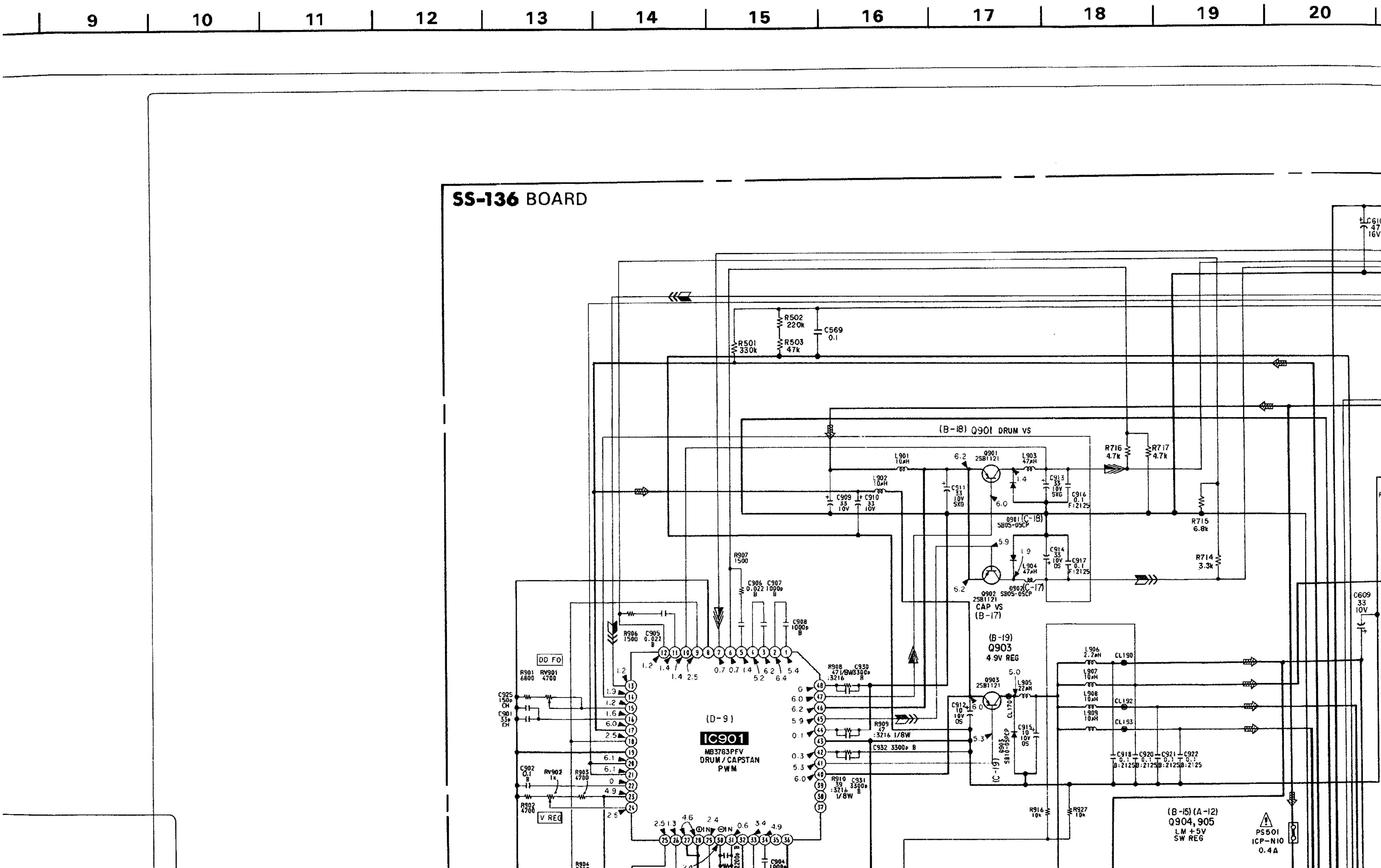
9
10
11
12
13
14
15
16
17
18
19
20
SS-136 BOARD
R502 220k
R503 47k
R501 330k
C569 0.1
(B-18) Q901 DRUM VS
Q901 2SB1121
L901 10μH
L902 10μH
L903 47μH
C909 33 10V
C910 33 10V
C911 33 10V SXG
C913 33 10V SXG
C916 0.1 F:2125
R716 4.7k
R717 4.7k
R715 6.8k
R714 3.3k
Q902 2SB1121 CAP VS (B-17)
L904 47μH
C914 33 10V OS
C917 0.1 F:2125
R907 1500
C906 0.022 B
C907 1000p B
C908 1000p B
R906 1500
C905 0.022 B
DD FO
R901 6800
RV901 4700
C925 150p CH
C901 33p CH
C902 0.1 B
RV902 1k
R903 4700
R902 4700
V REG
(D-9)
IC901
MB3783PFV
DRUM/CAPSTAN
PWM
R908 47 1/8W :3216
C930 3300p B
R909 47 :3216 1/8W
C932 3300p B
R910 39 :3216 1/8W
C931 3300p B
(B-19)
Q903
4.9V REG
Q903 2SB1121
L905 22μH
C912 10 10V OS
C915 10 10V OS
L906 2.2μH
L907 10μH
L908 10μH
L909 10μH
CL190
CL192
CL193
C918 0.1 B:2125
C920 0.1 B:2125
C921 0.1 B:2125
C922 0.1 B:2125
R916 10k
R927 10k
(B-15) (A-12)
Q904, 905
LM +5V
SW REG
PS501
ICP-N10
0.4A
C609 33 10V
C610 47 16V

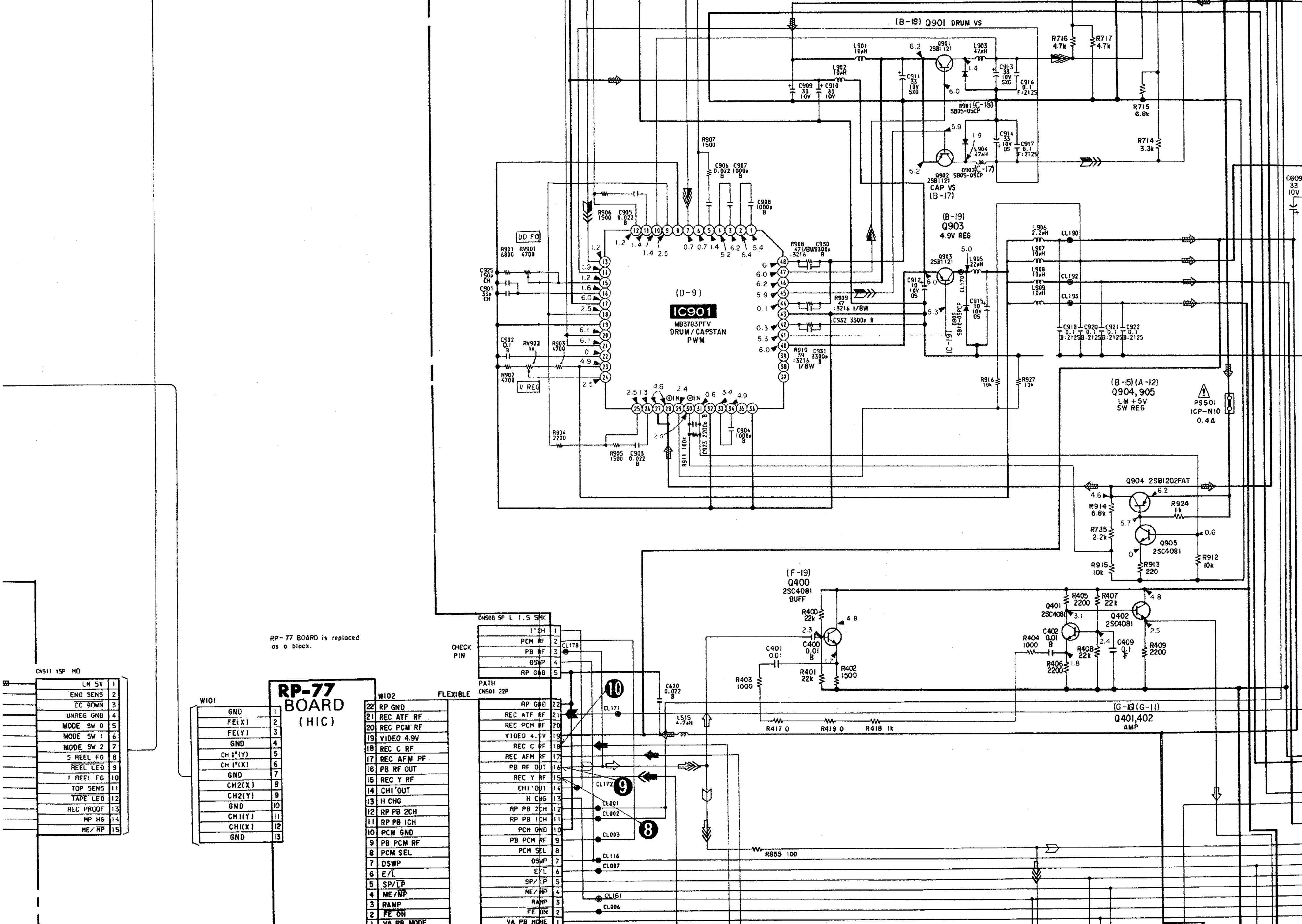

CN508:

1°CH	1
PCM RF	2
PB RF	3
DSWP	4
RP GND	5

CN511:

LM 5V	1
END SENS	2
CC DOWN	3
UNREG GND	4
MODE SW 0	5
MODE SW 1	6
MODE SW 2	7
S REEL FG	8
REEL LED	9
T REEL FG	10
TOP SENS	11
TAPE LED	12
REC PROOF	13
MP HG	14
ME/MP	15

W101:

GND	1
FE(X)	2
FE(Y)	3
GND	4
CH 1°(Y)	5
CH 1°(X)	6
GND	7
CH2(X)	8
CH2(Y)	9
GND	10
CH1(Y)	11
CH1(X)	12
GND	13

W102 / CN501:

	W102	CN501	
22	RP GND	RP GND	22
21	REC ATF RF	REC ATF RF	21
20	REC PCM RF	REC PCM RF	20
19	VIDEO 4.9V	VIDEO 4.9V	19
18	REC C RF	REC C RF	18
17	REC AFM RF	REC AFM RF	17
16	PB RF OUT	PB RF OUT	16
15	REC Y RF	REC Y RF	15
14	CH1'OUT	CH1'OUT	14
13	H CHG	H CHG	13
12	RP PB 2CH	RP PB 2CH	12
11	RP PB 1CH	RP PB 1CH	11
10	PCM GND	PCM GND	10
9	PB PCM RF	PB PCM RF	9
8	PCM SEL	PCM SEL	8
7	DSWP	DSWP	7
6	E/L	E/L	6
5	SP/LP	SP/LP	5
4	ME/MP	ME/MP	4
3	RAMP	RAMP	3
2	FE ON	FE ON	2
1	VA PB MODE	VA PB MODE	1

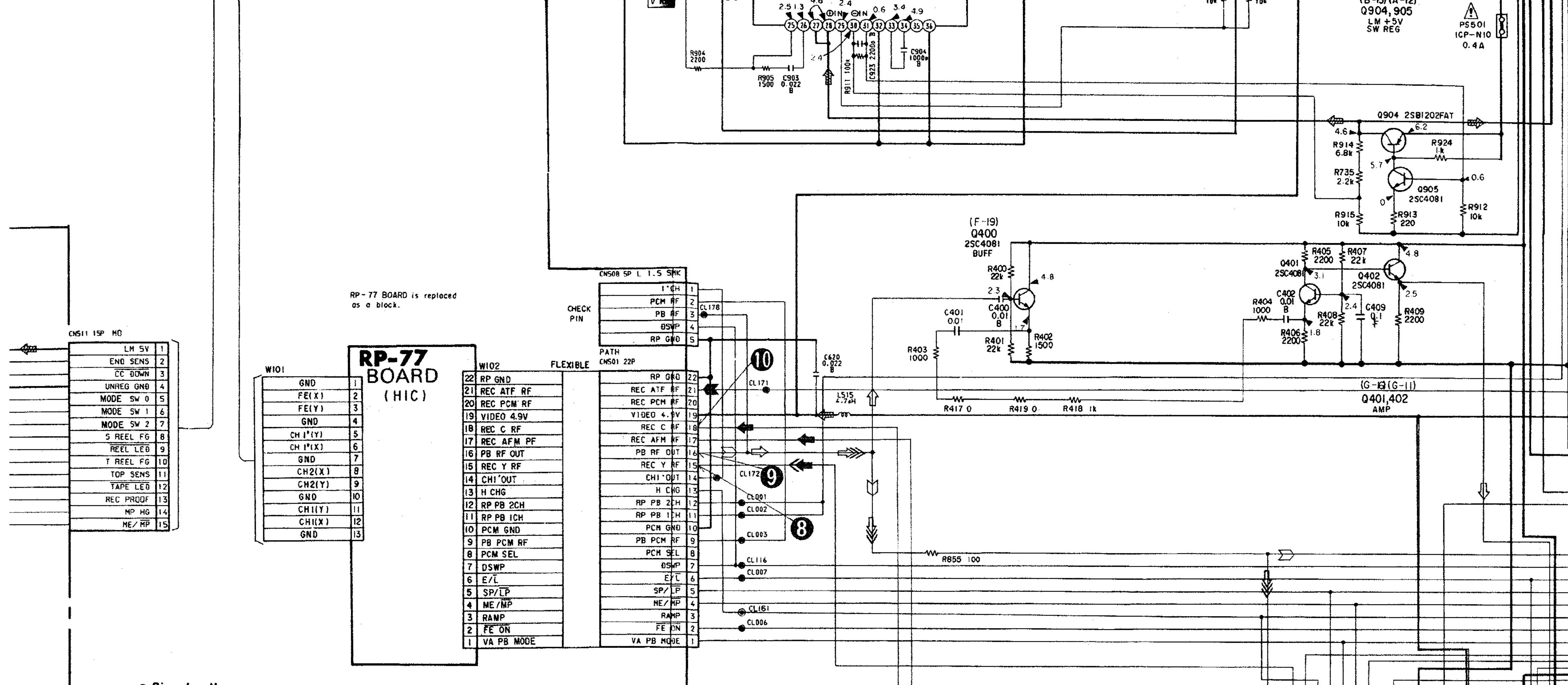

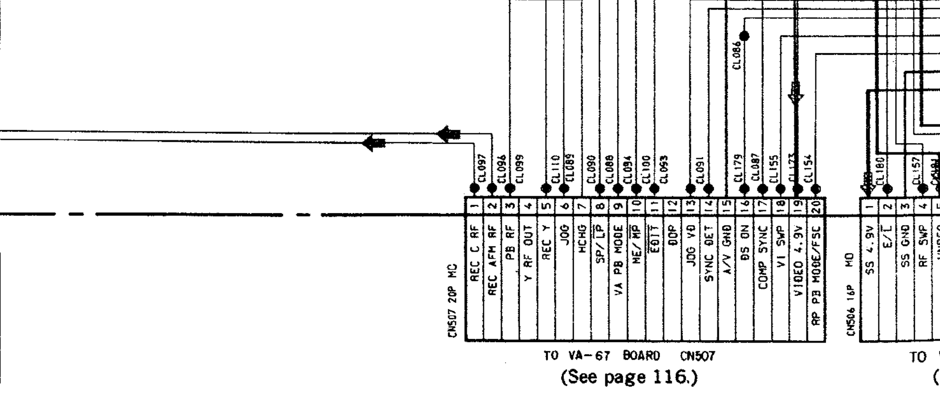

• Signal path

	REC	REC/PB	PB
Drum speed servo		▷	
Drum phase servo		▷▷	
Drum servo(speed and phase)		▷▷▷	
Capstan speed servo		⊳	
Capstan phase servo	➤»	⊳»	⊳»
Capstan servo(speed and phase)		⊳»»	
Ref.signal	➤	⊳	⊳

• Signal path

	VIDEO Signal			AUDIO Signal
	CHROMA	Y	Y/CHROMA	
REC	➡	➡»	➡»»	➡
PB	⇨	⇨»	⇨»»	⇨

rk ⚠ or dotted
afety.
cified.

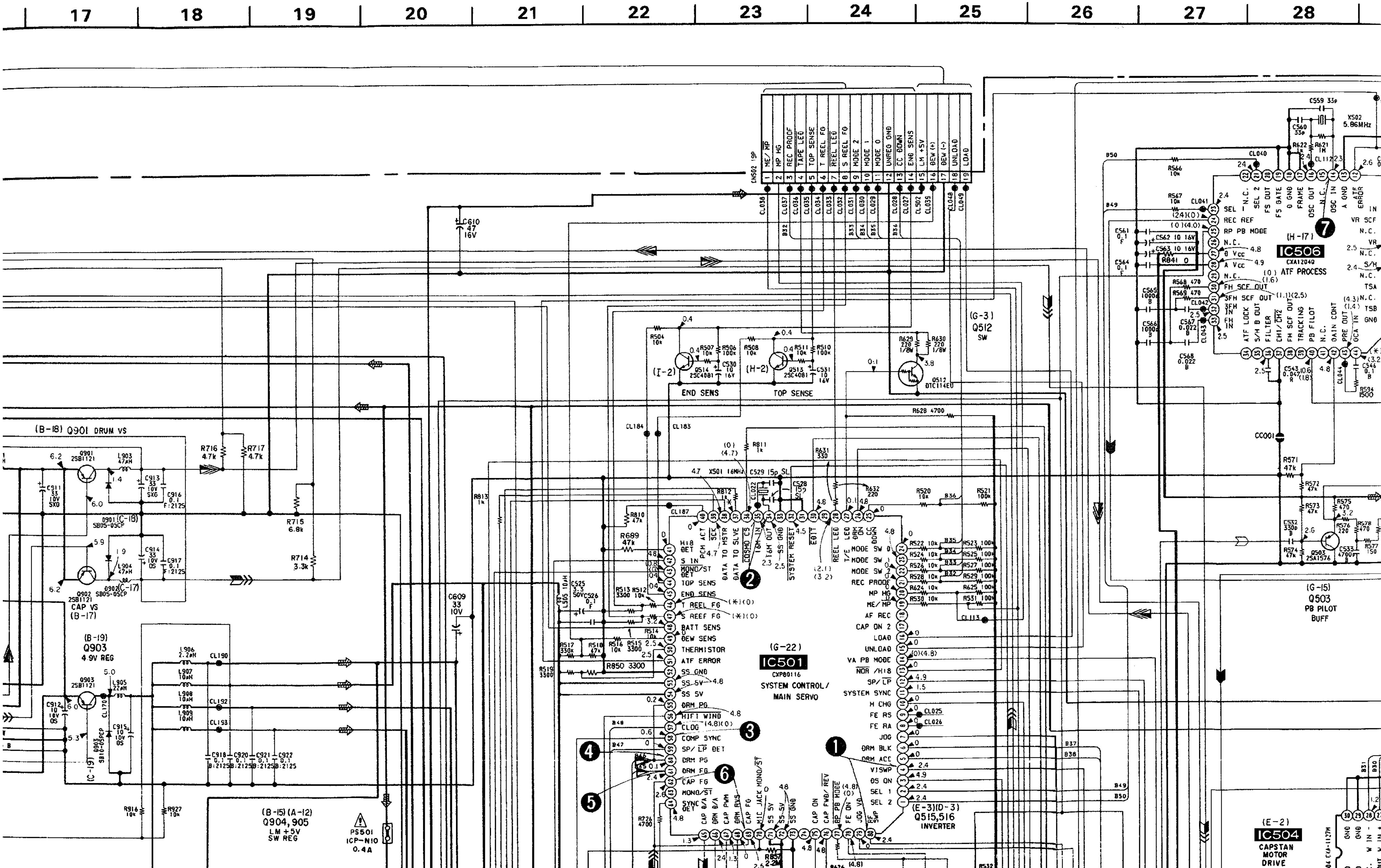
17
18
19
20
21
22
23
24
25
26
27
28
(B-18) Q901 DRUM VS
Q902 CAP VS (B-17)
(B-19) Q903 4.9V REG
(B-15) (A-12) Q904,905 LM +5V SW REG
PS501 ICP-N10 0.4A
END SENS
TOP SENSE
(G-3) Q512 SW
CN502 19P
(G-22) IC501 CXP80116 SYSTEM CONTROL/ MAIN SERVO
(H-17) IC506 CXA1204Q ATF PROCESS
(G-15) Q503 PB PILOT BUFF
(E-3) (D-3) Q515,516 INVERTER
(E-2) IC504 CAPSTAN MOTOR DRIVE

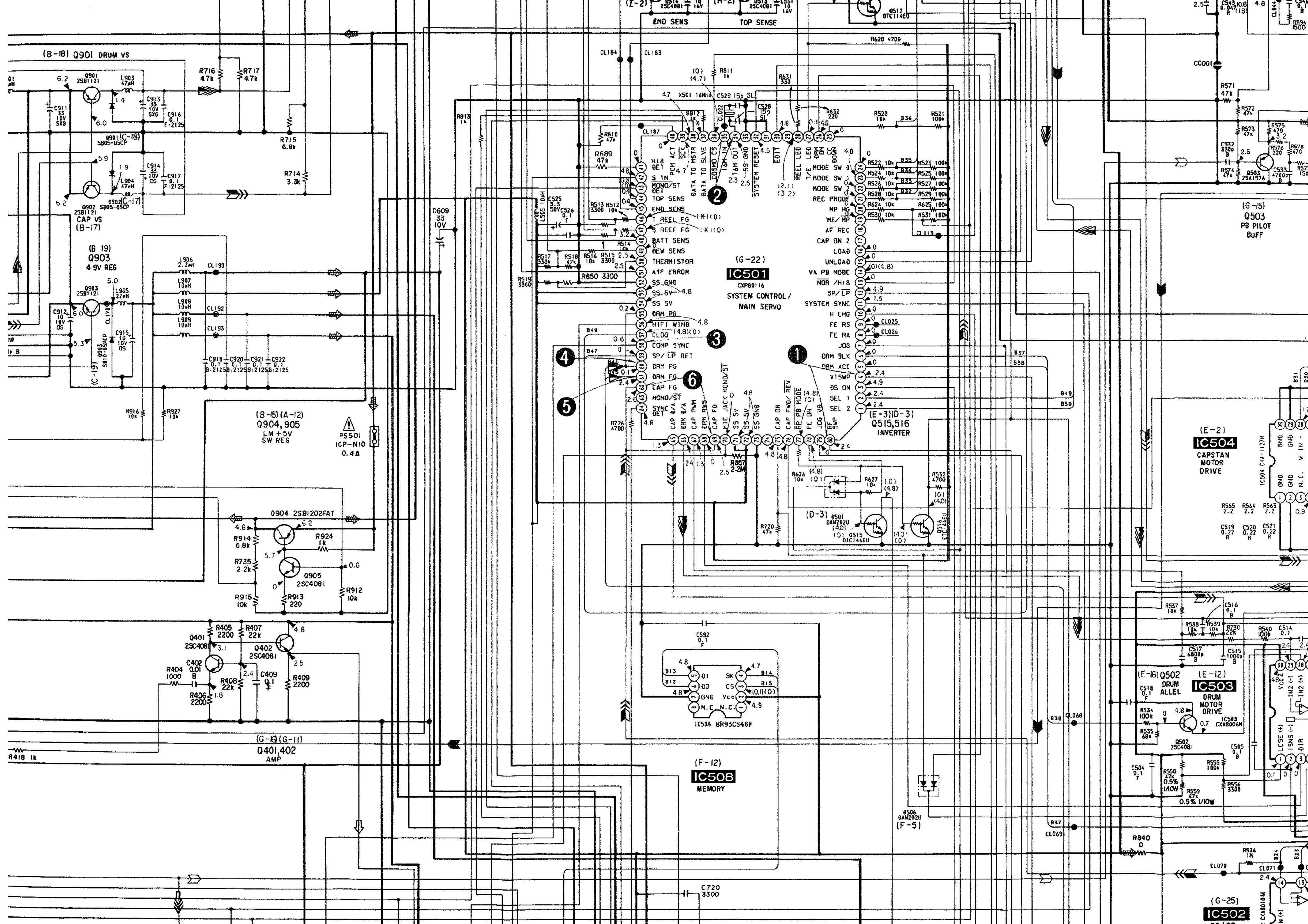

(B-18) Q901 DRUM VS
Q901 2SB1121
L903 47μH
C911 33 10V SXG
C913 33 10V SXG
C916 0.1 F:2125
B901 (C-18) SB05-05CP
C914 33 10V OS
C917 0.1 F:2125
L904 47μH
Q902 2SB1121 CAP VS (B-17)
Q902 (C-17)
R716 4.7k
R717 4.7k
R715 6.8k
R714 3.3k
(B-19) Q903 4.9V REG
Q903 2SB1121
L905 22μH
L906 2.2μH
L907 10μH
L908 10μH
L909 10μH
CL190
CL192
CL193
C918 0.1 B:2125
C920 0.1 B:2125
C921 0.1 B:2125
C922 0.1 B:2125
R916 10k
R927 10k
(B-15)(A-12) Q904,905 LM +5V SW REG
PS501 ICP-N10 0.4A
C609 33 10V
Q904 2SB1202FAT
R914 6.8k
R924 1k
R735 2.2k
Q905 2SC4081
R915 10k
R913 220
R912 10k
Q401 2SC4081
R405 2200
R407 22k
Q402 2SC4081
R404 1000
C402 0.01 B
R406 2200
R408 22k
C409 0.1
R409 2200
(G-10)(G-11) Q401,402 AMP
R418 1k
END SENS
TOP SENSE
Q512 DTC114EU
CL184
CL183
R811 1k
X501 16MHz
C529 15p
C528 15p
R631 330
R632 220
R520 10k
R521 100k
R810 47k
R689 47k
R813 1k
CL187
PCM ACT
SCK
DATA TO MSTR
DATA TO SLVE
COSMO CS
16M IN
16M OUT
SS GND
SYSTEM RESET
EDIT
REEL LED
T/E MODE SW
DRM CC DOWN
H18 DET
S IN
MONO/ST DET
TOP SENS
END SENS
T REEL FG
S REEF FG
BATT SENS
DEW SENS
THERMISTOR
ATF ERROR
SS GND
SS 5V
SS 5V
DRM PG
HIFI WIND
CLOG
COMP SYNC
SP/LP DET
DRM PG
DRM FG
CAP FG
MONO/ST
SYNC DET
(G-22) IC501 CXP80116 SYSTEM CONTROL/ MAIN SERVO
T/E MODE SW
MODE SW
MODE SW
REC PROOF
MP HG
ME/MP
AF REC
CAP ON 2
LOAD
UNLOAD
VA PB MODE
NOR /H18
SP/LP
SYSTEM SYNC
H CHG
FE RS
FE RA
JOG
DRM BLK
DRM ACC
V1SWP
DS ON
SEL 1
SEL 2
CAP D/A
DRM D/A
CAP PWM
DRM RVS
CAP FG
MIC JACK MONO/ST
SS 5V
SS 5V
SS GND
CAP ON
CAP FWD/REV
RP PB MODE
FE ON
JOG VA
RF SWP
(E-3)(D-3) Q515,516 INVERTER
R522 10k
R524 10k
R526 10k
R528 10k
R624 10k
R530 10k
R523 100k
R525 100k
R527 100k
R529 100k
R625 100k
R531 100k
CL113
CL025
CL026
R513 3300
R512 10k
C525 3.3 50V
C526 0.1 F
L505 10μH
R514 10k
R517 330k
R518 47k
R516 10k
R515 3300
R850 3300
R519 3300
R726 4700
R857 2.2M
R626 10k
R627 10k
R532 4700
R720 47k
(D-3) Q501 DAN202U
Q515 DTC144EU
Q516 DTC144EU
C592 0.1 F
IC508 BR93CS46F
DI
DO
GND
N.C.
N.C.
SK
CS
Vcc
(F-12) IC508 MEMORY
Q506 DAN202U (F-5)
C720 3300
R628 4700
CC001
R571 47k
R572 47k
R573 47k
R575 470
R576 220
R578 470
C532 330p B
R574 47k
Q503 2SA1576
C533 4700p B
(G-15) Q503 PB PILOT BUFF
(E-2) IC504 CAPSTAN MOTOR DRIVE
IC504 CXA-1127M
R565 2.2
R564 2.2
R563 2.2
C519 0.22 R
C520 0.22 R
C521 0.22 R
R537 10k
R538 10k
R539 10k
C516 0.1 B
R230 22k
R540 100k
C514 0.1
C517 6800p B
C515 1000p B
(E-16) Q502 DRUM ALLEL
(E-12) IC503 DRUM MOTOR DRIVE
IC503 CXA8006M
C518 0.1 F
R534 100k
R535 68k
Q502 2SC4081
CL068
C504 0.1 F
R558 47k 0.5% 1/10W
R559 47k 0.5% 1/10W
R555 100k
R556 3300
C505 0.1 B
CL069
R840 0
R536 1k
CL070
CL071
(G-25) IC502

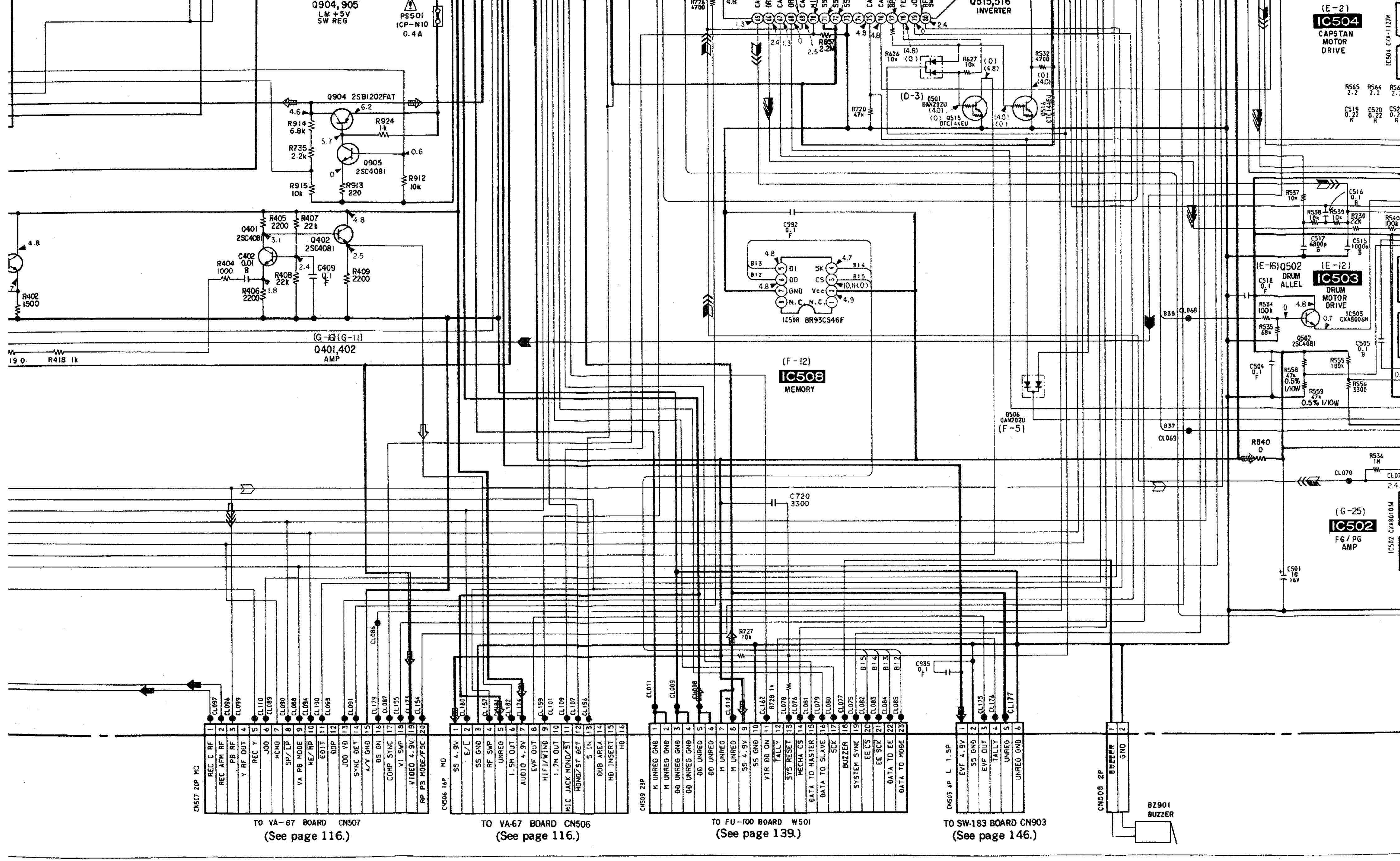

Q904,905
LM +5V
SW REG
PS501
ICP-N10
0.4A
Q515,516
INVERTER
IC504
CAPSTAN
MOTOR
DRIVE
Q904 2SB1202FAT
Q905
2SC4081
Q401
2SC4081
Q402
2SC4081
Q401,402
AMP
IC508
MEMORY
IC508 BR93CS46F
IC503
DRUM
MOTOR
DRIVE
Q502
DRUM
ALLEL
IC502
FG/PG
AMP
C720
3300
R727
10k
BZ901
BUZZER
CN507 20P MC
REC C RF
REC AFM RF
PB RF
Y RF OUT
REC Y
JOG
HCHG
SP/LP
VA PB MODE
ME/MP
EOTT
DDP
JOG VD
SYNC DET
A/V GND
DS ON
COMP SYNC
V1 SWP
VIDEO 4.9V
RP PB MODE/FSC
TO VA-67 BOARD CN507
(See page 116.)
CN506 16P MD
SS 4.9V
E/L
SS GND
RF SWP
UNREG
1.5M OUT
AUDIO 4.9V
EVF OUT
HIFI/WIND
1.7M OUT
MIC JACK MONO/ST
MONO/ST DET
S IN
DUB AREA
MD INSERT
MD
TO VA-67 BOARD CN506
(See page 116.)
CN509 23P
M UNREG GND
M UNREG GND
DD UNREG GND
DD UNREG GND
DD UNREG
DD UNREG
M UNREG
M UNREG
SS 4.9V
SS GND
VTR DD ON
TALLY
SYS RESET
MECHA CS
DATA TO MASTER
DATA TO SLAVE
SCK
BUZZER
SYSTEM SYNC
EE CS
EE SCK
DATA TO EE
DATA TO MODE
TO FU-100 BOARD W501
(See page 139.)
CN503 6P L 1.5P
EVF 4.9V
SS GND
EVF OUT
TALLY
UNREG
UNREG GND
TO SW-183 BOARD CN903
(See page 146.)
CN505 2P
BUZZER
GND

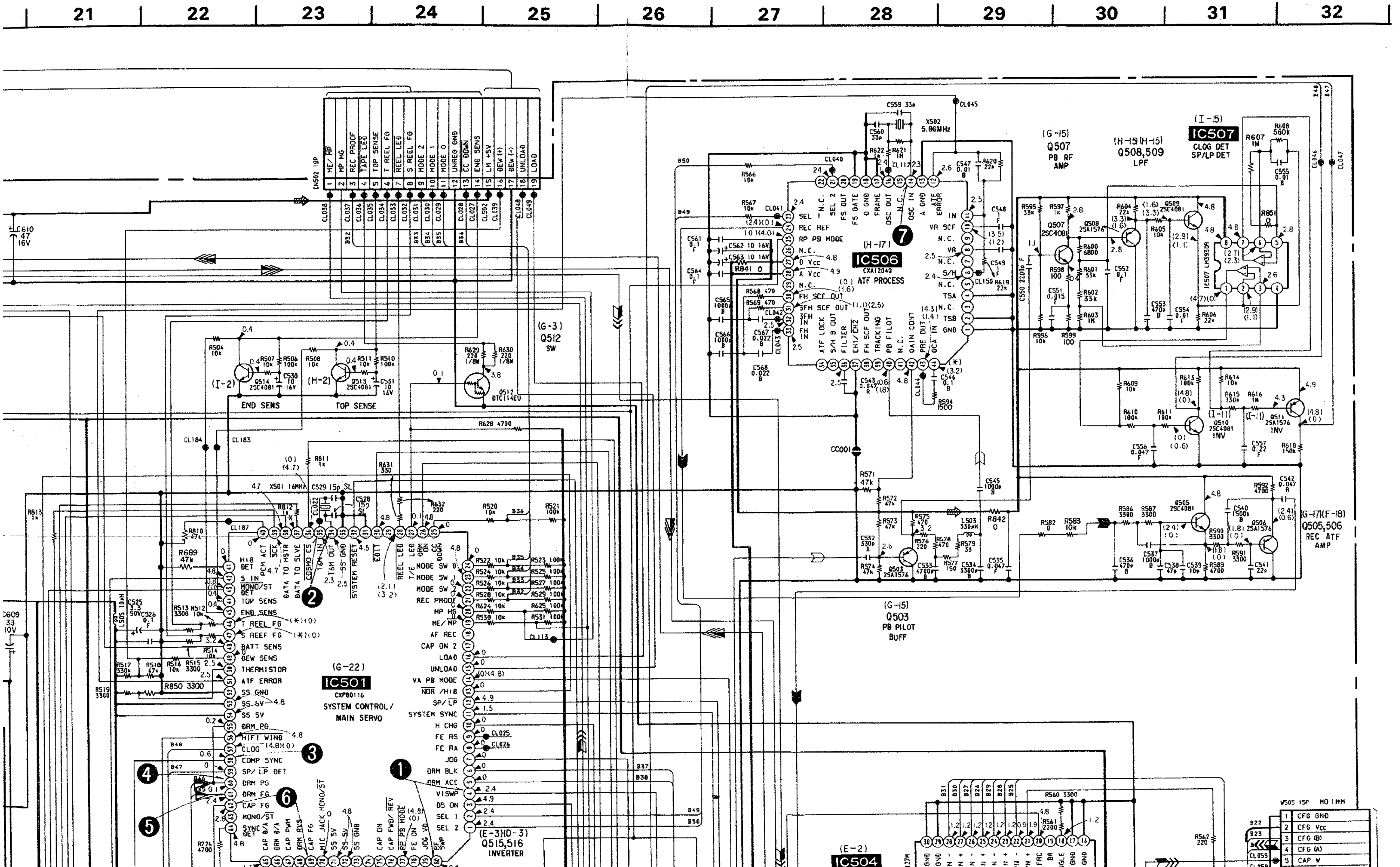

21
22
23
24
25
26
27
28
29
30
31
32
CN502 19P
ME/MP
MP HG
REC PROOF
TAPE LED
TOP SENSE
T REEL FG
REEL LED
S REEL FG
MODE 2
MODE 1
MODE 0
UNREG GND
CC DOWN
END SENS
LM +5V
DEW (+)
DEW (-)
UNLOAD
LOAD
(G-3)
Q512
SW
END SENS
TOP SENSE
Q512 DTC114EU
Q514 2SC4081
Q513 2SC4081
X502 5.86MHz
(H-17)
IC506
CXA1204Q
ATF PROCESS
SEL 1
REC REF
RP PB MODE
N.C.
D Vcc
A Vcc
FH SCF OUT
3FH SCF OUT
ATF LOCK
S/H B OUT
FILTER
CH1/CH2
FH SCF OUT
TRACKING
PB PILOT
GAIN CONT
PRE OUT
GCA IN
N.C.
SEL 2
FS OUT
FS GATE
D GND
FRAME
OSC OUT
OSC IN
A GND
ATF ERROR
IN
VR SCF
VR
S/H
TSA
TSB
GND
(G-15)
Q507
PB RF
AMP
(H-15)(H-15)
Q508,509
LPF
(I-15)
IC507
CLOG DET
SP/LP DET
IC507 LM393DR
Q507 2SC4081
Q508 2SA1576
Q509 2SC4081
Q510 2SC4081
INV
Q511 2SA1576
INV
Q505 2SC4081
Q506 2SA1576
(G-17)(F-18)
Q505,506
REC ATF
AMP
(G-15)
Q503
PB PILOT
BUFF
Q503 2SA1576
X501 16MHz
(G-22)
IC501
CXP80116
SYSTEM CONTROL/
MAIN SERVO
H18 DET
S IN
MONO/ST DET
TOP SENS
END SENS
T REEL FG
S REEF FG
BATT SENS
DEW SENS
THERMISTOR
ATF ERROR
SS GND
SS 5V
SS 5V
DRM PG
HIFI WING
CLOG
COMP SYNC
SP/LP DET
DRM PG
DRM FG
CAP FG
MONO/ST
SYNC DET
PCM ACT
SCK
DATA TO MSTR
DATA TO SLVE
CDSMO CS
T6M OUT
SS GND
SYSTEM RESET
EOTT
REEL LED
DRM ON
CC DOWN
MODE SW 0
MODE SW 1
MODE SW 2
REC PROOF
MP HG
ME/MP
AF REC
CAP ON 2
LOAD
UNLOAD
VA PB MODE
NOR /H18
SP/LP
SYSTEM SYNC
H CHG
FE RS
FE RA
JOG
DRM BLK
DRM ACC
V1SWP
DS ON
SEL 1
SEL 2
CAP B/A
DRM B/A
CAP PWM
DRM RVS
CAP FG
MIC JACK MONO/ST
SS 5V
SS 5V
SS GND
CAP ON
CAP FWD/REV
RP PB MODE
FE ON
JOG VA
RF SWP
(E-3)(D-3)
Q515,516
INVERTER
(E-2)
IC504
W505 15P MO 1MM
CFG GND
CFG Vcc
CFG (B)
CFG (A)
CAP W

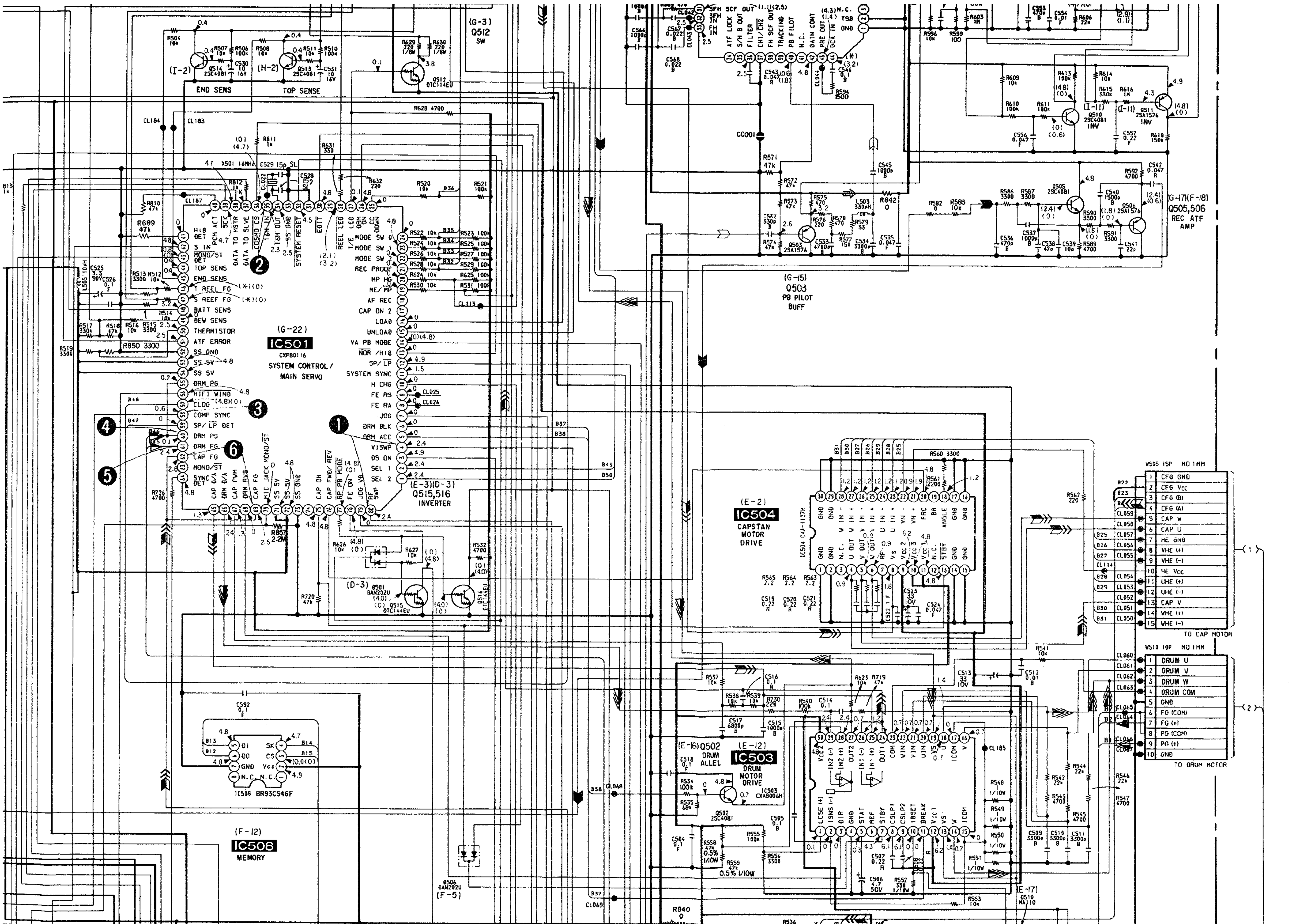

END SENS
TOP SENSE
(G-3) Q512 SW
Q514 2SC4081
Q513 2SC4081
Q512 DTC114EU
X501 16MHz
(G-22)
IC501
CXP80116
SYSTEM CONTROL / MAIN SERVO
PCM ACT
SCK
DATA TO MSTR
DATA TO SLVE
COSMO CS
16M IN
16M OUT
SS GND
SYSTEM RESET
EDIT
REEL LED
LED ON
DRM ON
CC DOWN
HI8 DET
S IN
MONO/ST DET
TOP SENS
END SENS
T REEL FG
S REEF FG
BATT SENS
DEW SENS
THERMISTOR
ATF ERROR
SS GND
SS 5V
SS 5V
DRM PG
HIFI WIND
CLOG
COMP SYNC
SP/ LP DET
DRM PG
DRM FG
CAP FG
MONO/ST
SYNC DET
T/E MODE SW
MODE SW
MODE SW
REC PROOF
MP HG
ME/ MP
AF REC
CAP ON 2
LOAD
UNLOAD
VA PB MODE
NOR /HI8
SP/ LP
SYSTEM SYNC
H CHG
FE RS
FE RA
JOG
DRM BLK
DRM ACC
VISWP
OS ON
SEL 1
SEL 2
CAP DS
DRM D/A
CAP PWM
DRM PWM
CAP FG
MIC JACK MONO/ST
SS 5V
SS GND
CAP ON
CAP FWD/ REV
RP PB MODE
FE ON
JOG VD
RF SWP
(E-3)(D-3) Q515,516 INVERTER
(D-3) D501 DAN202U
Q515 DTC144EU
Q516 DTC144EU
IC508 BR93CS46F
(F-12) IC508 MEMORY
D506 DAN202U (F-5)
ATF LOCK
S/H B OUT
FILTER
CH1/CH2
FH SCF OUT
TRACKING
PB PILOT
N.C.
GAIN CONT
PRE OUT
OCA IN
TSB
GND
(G-15) Q503 PB PILOT BUFF
Q503 2SA1576
Q505 2SC4081
Q506 2SA1576
(G-17)(F-18) Q505,506 REC ATF AMP
Q510 2SC4081 INV
Q511 2SA1576 INV
(E-2) IC504 CAPSTAN MOTOR DRIVE
IC504 CXA-1127M
(E-16) Q502 DRUM ALLEL
Q502 2SC4081
(E-12) IC503 DRUM MOTOR DRIVE
IC503 CXA8006M
(E-17) D510 MA110
WS05 15P MO1MM
CFG GND
CFG Vcc
CFG (B)
CFG (A)
CAP W
CAP U
HE GND
VHE (+)
VHE (-)
HE Vcc
UHE (+)
UHE (-)
CAP V
WHE (+)
WHE (-)
TO CAP MOTOR
WS10 10P MO1MM
DRUM U
DRUM V
DRUM W
DRUM COM
GND
FG (COM)
FG (+)
PG (COM)
PG (+)
GND
TO DRUM MOTOR

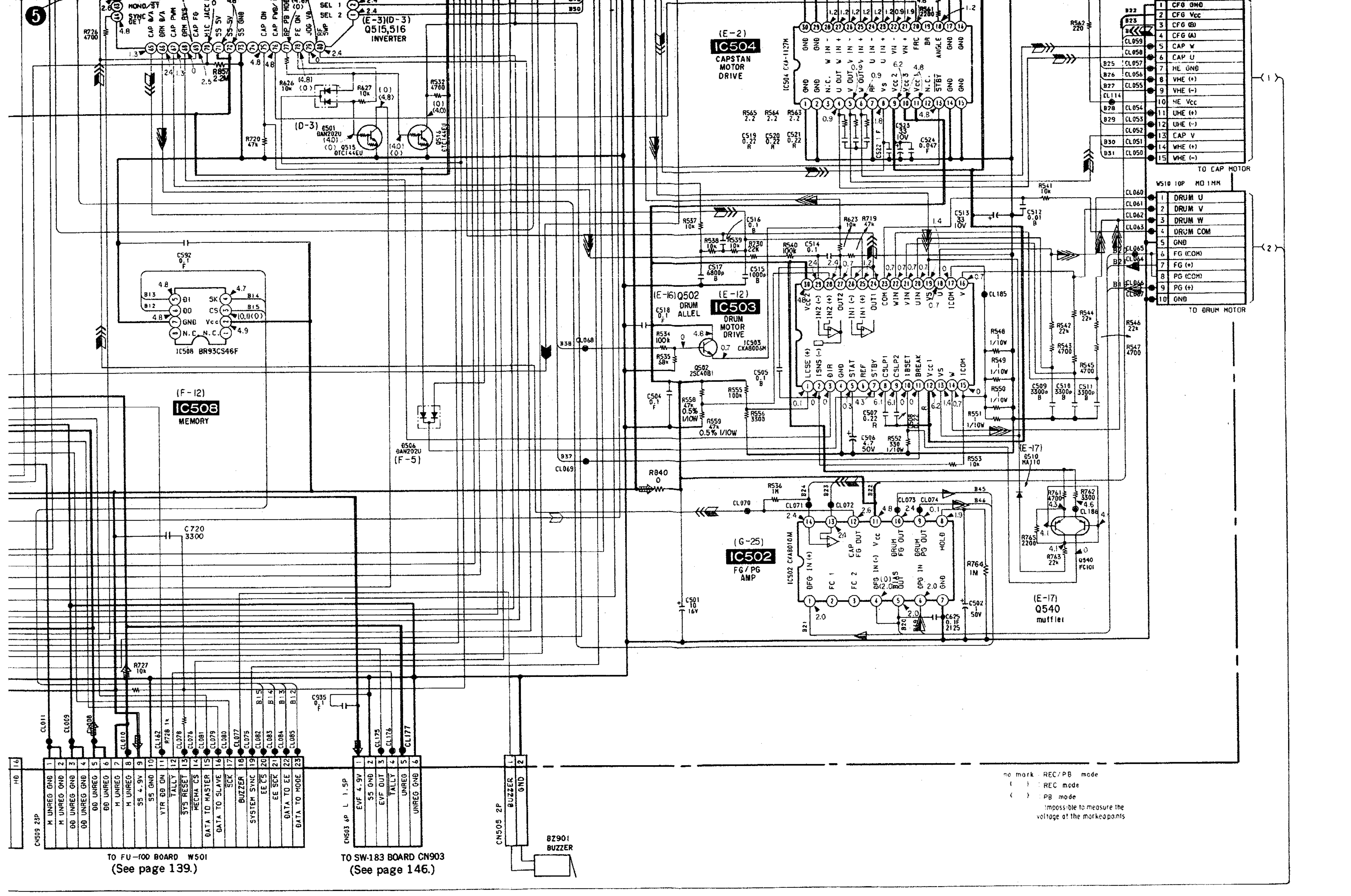

SERVO/SYSTEM CONTROL

CK-50, DK-15, ED-32 (FUNCTION SWITCH), LI-39 (LITHIUM BATTERY TERMINAL), RM-50 (REMOTE CONTROL RECEIVER), VK-14 (FUNCTION SWITCH), ZK-14 (SWITCH) SCHEMATIC DIAGRAM

—Ref. No. CK-50, DK-15, ED-32, LI-39, RM-50, VK-14 and ZK-14 BOARDS : 5000 series—

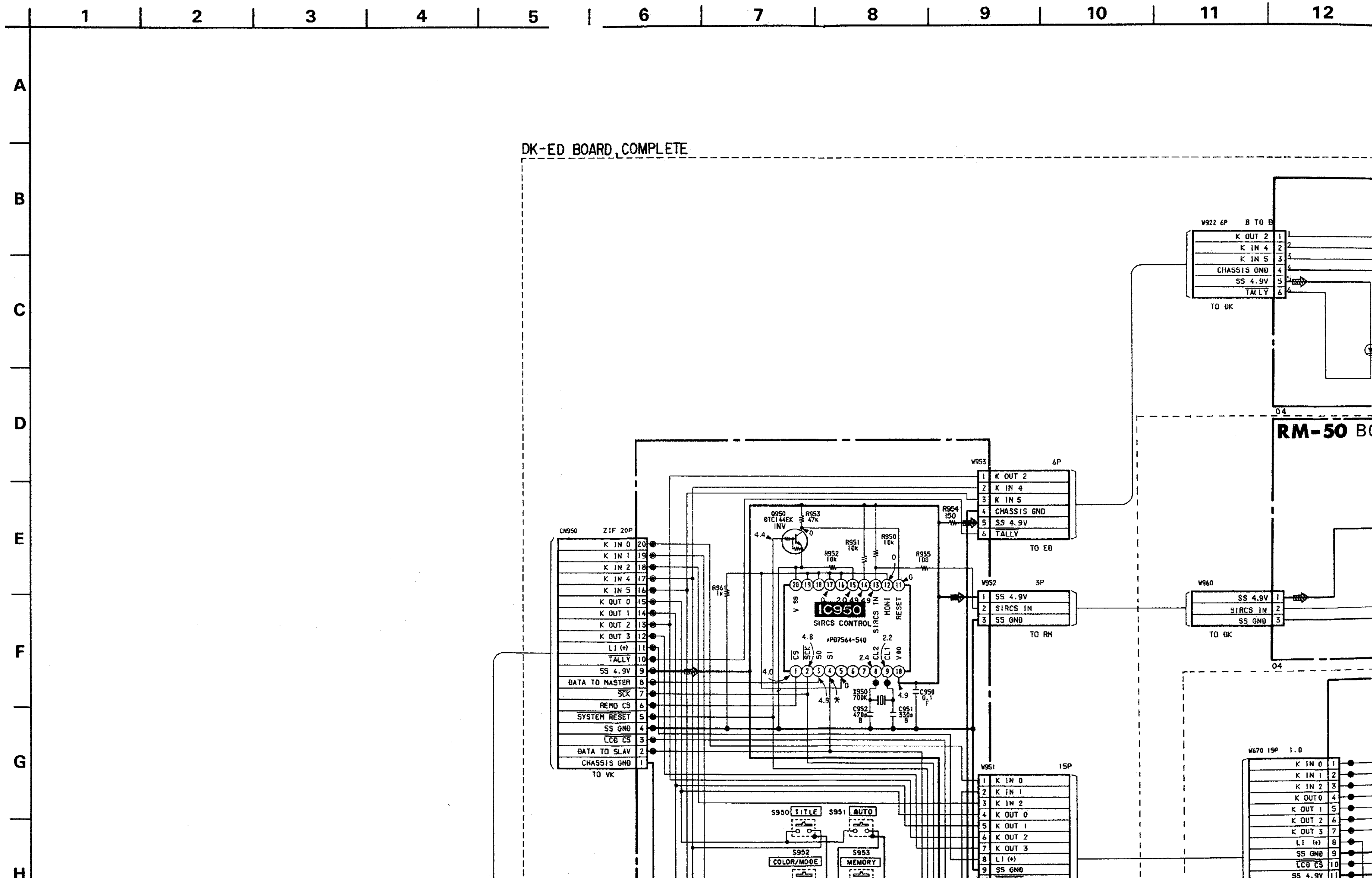

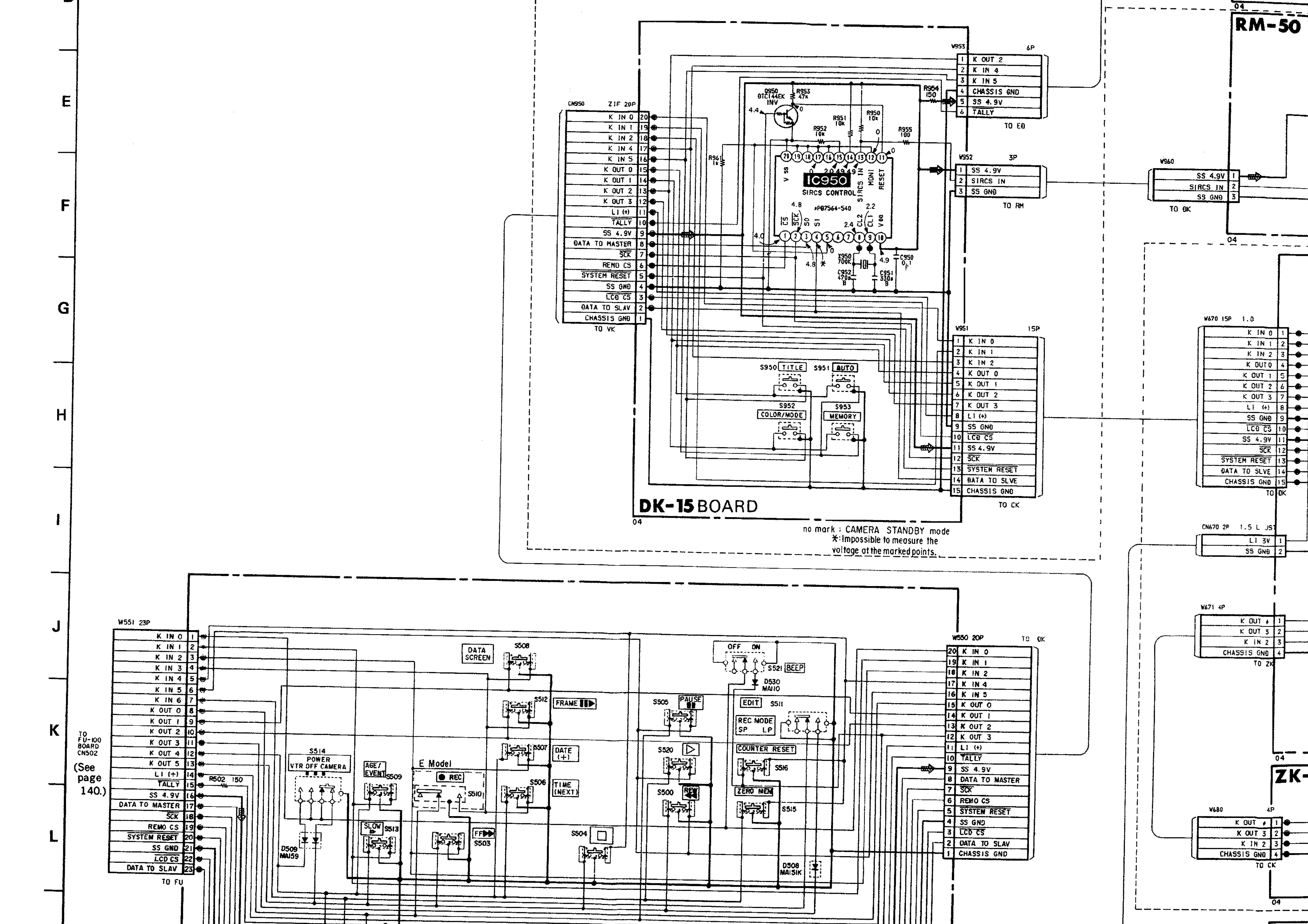

E
F
G
H
I
J
K
L
RM-50
DK-15 BOARD
CN950 ZIF 20P
K IN 0
K IN 1
K IN 2
K IN 4
K IN 5
K OUT 0
K OUT 1
K OUT 2
K OUT 3
LI (+)
TALLY
SS 4.9V
DATA TO MASTER
SCK
REMO CS
SYSTEM RESET
SS GND
LCD CS
DATA TO SLAV
CHASSIS GND
TO VK
W953 6P
K OUT 2
K IN 4
K IN 5
CHASSIS GND
SS 4.9V
TALLY
TO EQ
W952 3P
SS 4.9V
SIRCS IN
SS GND
TO RM
W951 15P
K IN 0
K IN 1
K IN 2
K OUT 0
K OUT 1
K OUT 2
K OUT 3
LI (+)
SS GND
LCD CS
SS 4.9V
SCK
SYSTEM RESET
DATA TO SLVE
CHASSIS GND
TO CK
Q950 DTC144EK INV
R953 47k
R954 150
R952 10k
R951 10k
R950 10k
R955 100
R961 1k
IC950
SIRCS CONTROL
μPD7564-540
V SS
SIRCS IN
MONI
RESET
CS
SCK
SO
SI
CL2
CL1
V DD
X950 700K
C952 470p B
C951 330p B
C950 0.1 F
S950 TITLE
S951 AUTO
S952 COLOR/MODE
S953 MEMORY
no mark : CAMERA STANDBY mode
*: Impossible to measure the voltage at the marked points.
W960
SS 4.9V
SIRCS IN
SS GND
TO DK
W670 15P 1.0
K IN 0
K IN 1
K IN 2
K OUT 0
K OUT 1
K OUT 2
K OUT 3
LI (+)
SS GND
LCD CS
SS 4.9V
SCK
SYSTEM RESET
DATA TO SLVE
CHASSIS GND
TO DK
CN670 2P 1.5 L JST
LI 3V
SS GND
W671 4P
K OUT 4
K OUT 3
K IN 2
CHASSIS GND
TO ZK
W680 4P
K OUT 4
K OUT 3
K IN 2
CHASSIS GND
TO CK
ZK-
W551 23P
K IN 0
K IN 1
K IN 2
K IN 3
K IN 4
K IN 5
K IN 6
K OUT 0
K OUT 1
K OUT 2
K OUT 3
K OUT 4
K OUT 5
LI (+)
TALLY
SS 4.9V
DATA TO MASTER
SCK
REMO CS
SYSTEM RESET
SS GND
LCD CS
DATA TO SLAV
TO FU
TO FU-100 BOARD CN502
(See page 140.)
R502 150
DATA SCREEN
S508
S512
FRAME
S507
DATE (+)
S506
TIME (NEXT)
S514
POWER VTR OFF CAMERA
AGE/EVENT
S509
E Model
REC
S510
SLOW
S513
FF
S503
S504
D509 MA159
S505
PAUSE
S520
S500
REW
OFF ON
S521 BEEP
D530 MA110
EDIT
S511
REC MODE SP LP
COUNTER RESET
S516
ZERO MEM
S515
D508 MA151K
W550 20P
TO DK
K IN 0
K IN 1
K IN 2
K IN 4
K IN 5
K OUT 0
K OUT 1
K OUT 2
K OUT 3
LI (+)
TALLY
SS 4.9V
DATA TO MASTER
SCK
REMO CS
SYSTEM RESET
SS GND
LCD CS
DATA TO SLAV
CHASSIS GND

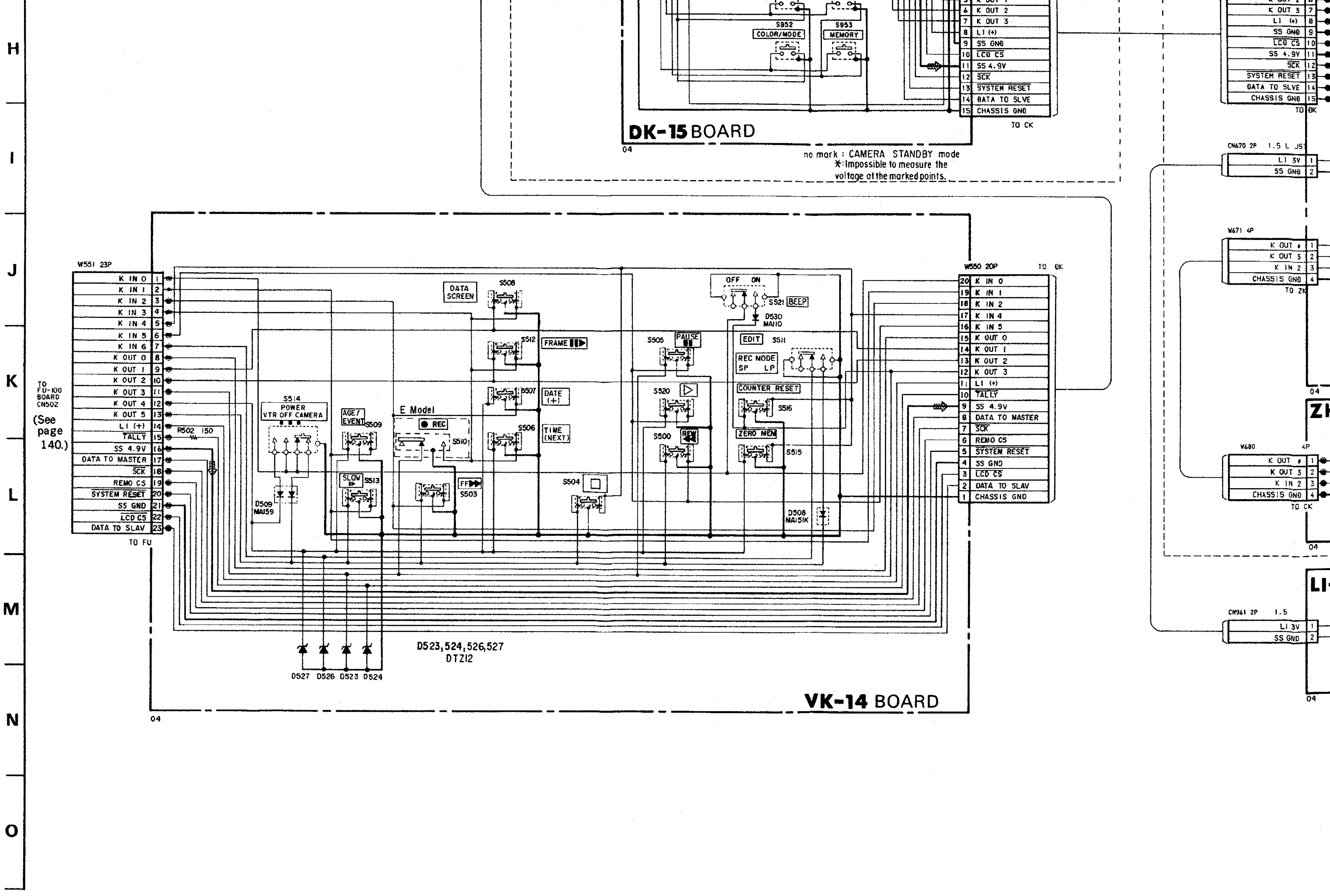
DK-15 BOARD
no mark : CAMERA STANDBY mode
*: Impossible to measure the voltage at the marked points.
S952 COLOR/MODE
S953 MEMORY
K OUT 2
K OUT 3
LI (+)
SS GND
LCD CS
SS 4.9V
SCK
SYSTEM RESET
DATA TO SLVE
CHASSIS GND
TO CK
VK-14 BOARD
W551 23P
K IN 0
K IN 1
K IN 2
K IN 3
K IN 4
K IN 5
K IN 6
K OUT 0
K OUT 1
K OUT 2
K OUT 3
K OUT 4
K OUT 5
LI (+)
TALLY
SS 4.9V
DATA TO MASTER
SCK
REMO CS
SYSTEM RESET
SS GND
LCD CS
DATA TO SLAV
TO FU
TO FU-100 BOARD CN502
(See page 140.)
R502 150
S514 POWER VTR OFF CAMERA
D509 MA159
AGE/EVENT S509
SLOW S513
E Model
REC S510
FF S503
DATA SCREEN S508
FRAME S512
DATE (+) S507
TIME (NEXT) S506
S504
S505 PAUSE
S520
S500 REW
OFF ON
S521 BEEP
D530 MA110
EDIT S511
REC MODE SP LP
COUNTER RESET S516
ZERO MEM S515
D508 MA151K
D523,524,526,527 DTZ12
D527 D526 D523 D524
W550 20P
TO DK
K IN 0
K IN 1
K IN 2
K IN 4
K IN 5
K OUT 0
K OUT 1
K OUT 2
K OUT 3
LI (+)
TALLY
SS 4.9V
DATA TO MASTER
SCK
REMO CS
SYSTEM RESET
SS GND
LCD CS
DATA TO SLAV
CHASSIS GND
CN670 2P 1.5 L JST
LI 3V
SS GND
W671 4P
K OUT 4
K OUT 3
K IN 2
CHASSIS GND
TO ZK
W680 4P
TO CK
CN961 2P 1.5
LI 3V
SS GND
H
I
J
K
L
M
N
O

(SWITCH) SCHEMATIC DIAGRAM

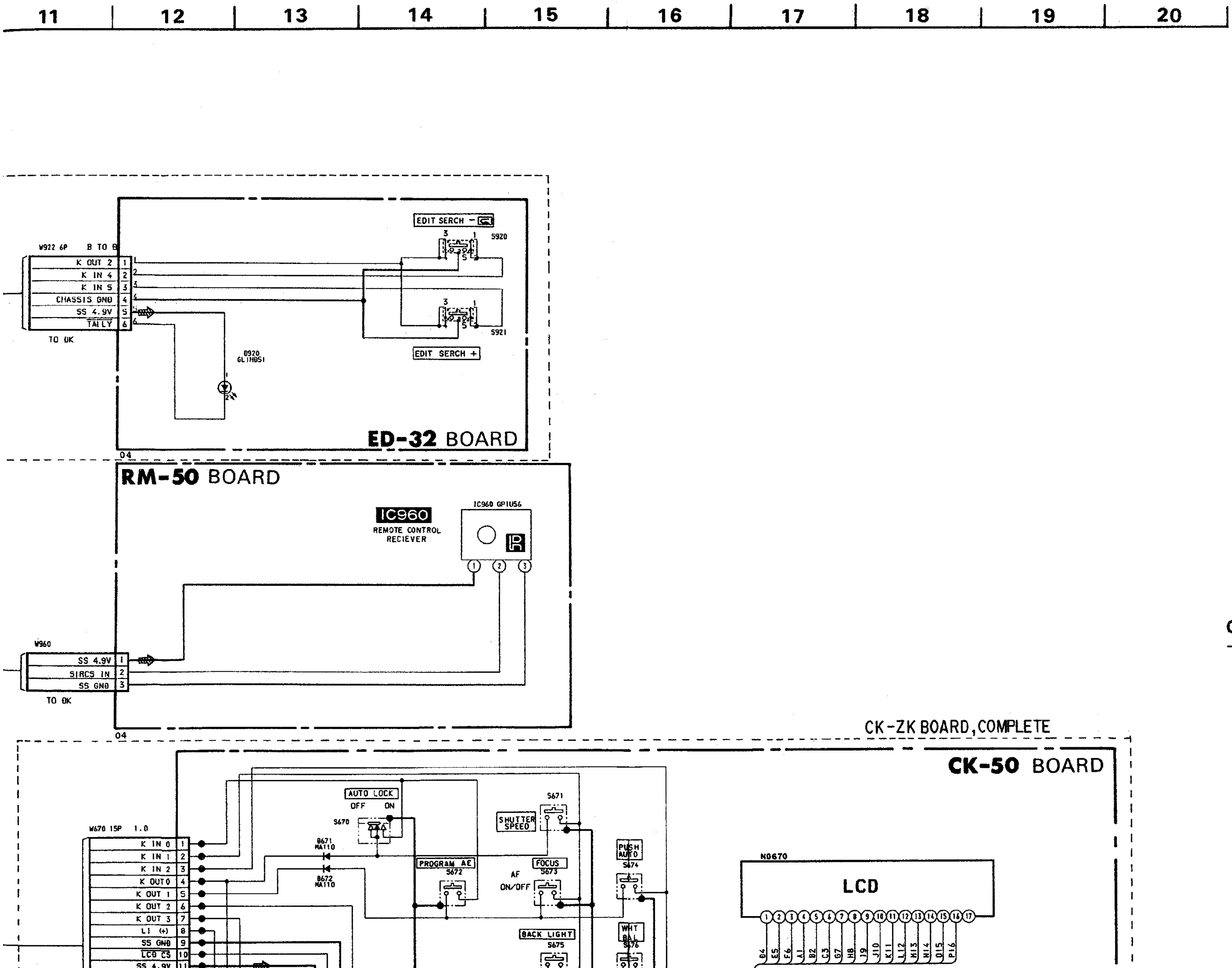

CK-50, DK-15, ED-32 (FUNCTION SWITC

—Ref. No. CK-50, DK-15, ED-32, LI-39, RM-5

ZK-14 BOARD
(CONDUCTOR SIDE)

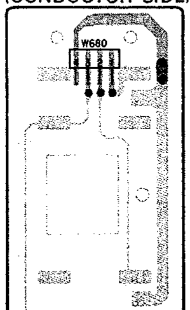

ZK-14 BOARD
(COMPONENT SIDE

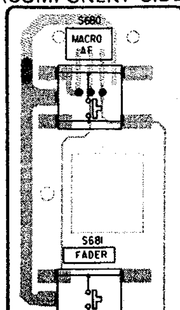

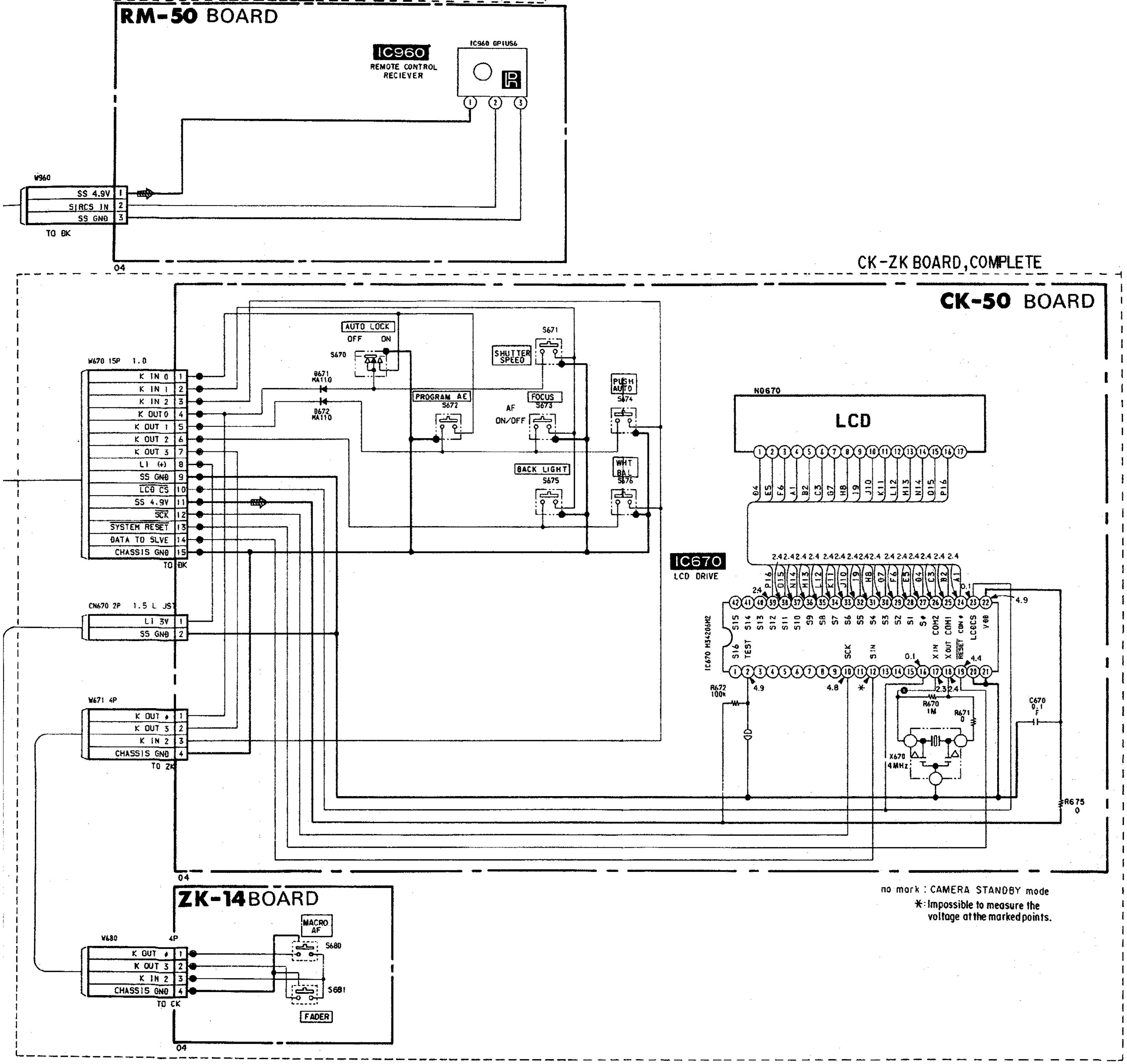

CK-50, DK-15, ED-32 (FUNCTION SWITC

—Ref. No. CK-50, DK-15, ED-32, LI-39, RM-5

ZK-14 BOARD (CONDUCTOR SIDE)

ZK-14 BOARD (COMPONENT SIDE)

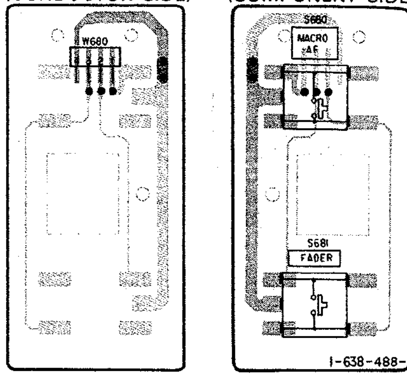

< IC >
IC950 8-759-145-63 uPD7564G-540

< TRANSISTOR >
Q950 8-729-901-01 DTC144EK

DK-15 BOARD (COMPONENT SIDE)

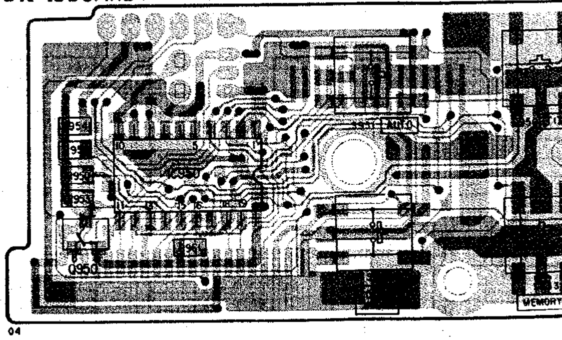

VK-14 BOARD (COMPONENT SIDE)

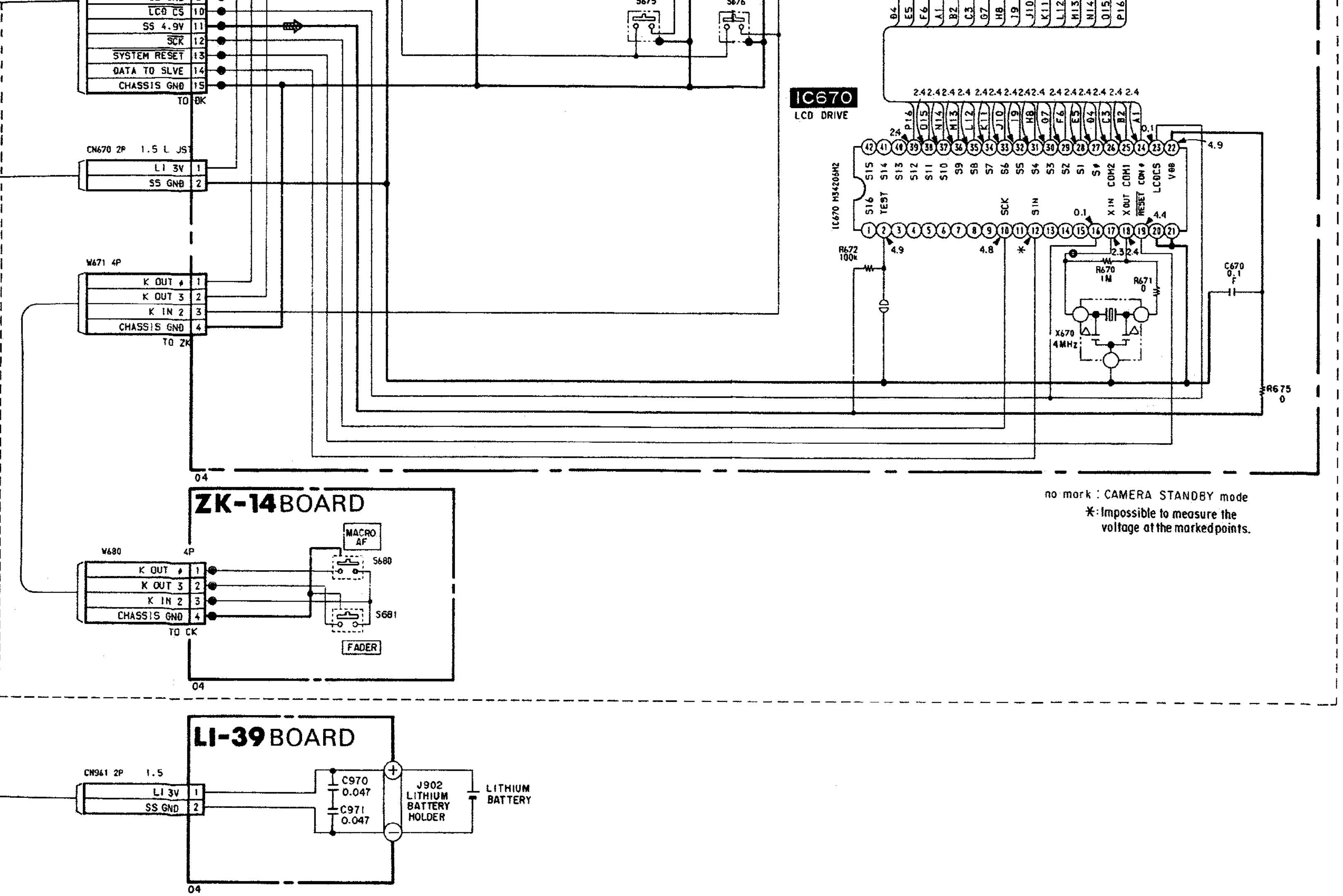

no mark : CAMERA STANDBY mode
*: Impossible to measure the voltage at the marked points.

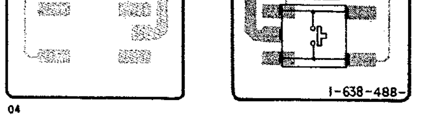

< IC >
IC950 8-759-145-63 uPD7564G-540

< TRANSISTOR >
Q950 8-729-901-01 DTC144EK

DK-15 BOARD (COMPONENT SIDE)

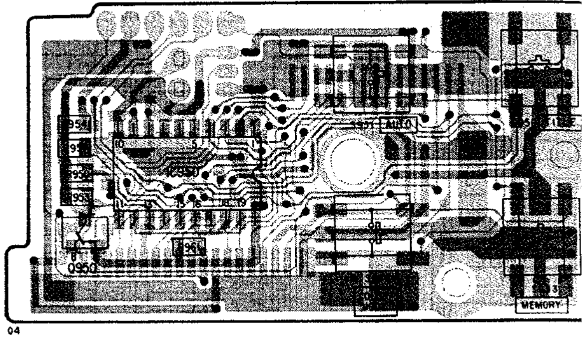

VK-14 BOARD (COMPONENT SIDE)

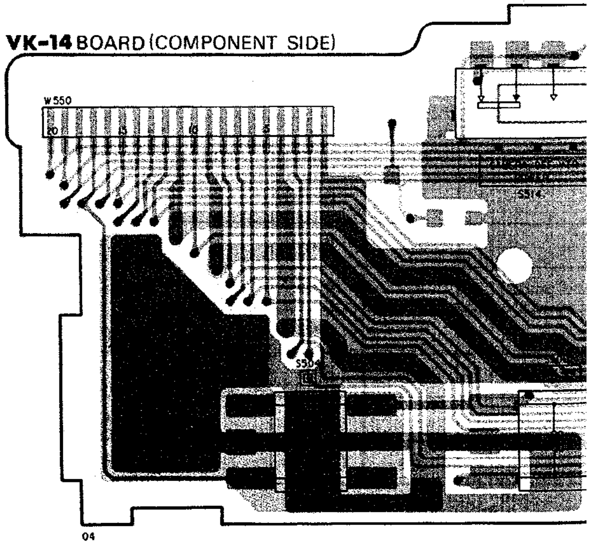

NCTION FUNCTION

CK-50, DK-15, ED-32 (FUNCTION SWITCH), LI-39 (LITHIUM BATTERY TERMINAL), RM-50 (REMOTE CONTROL RECEIVER)

—Ref. No. CK-50, DK-15, ED-32, LI-39, RM-50, VK-14 and ZK-14 BOARDS : 5000 series—

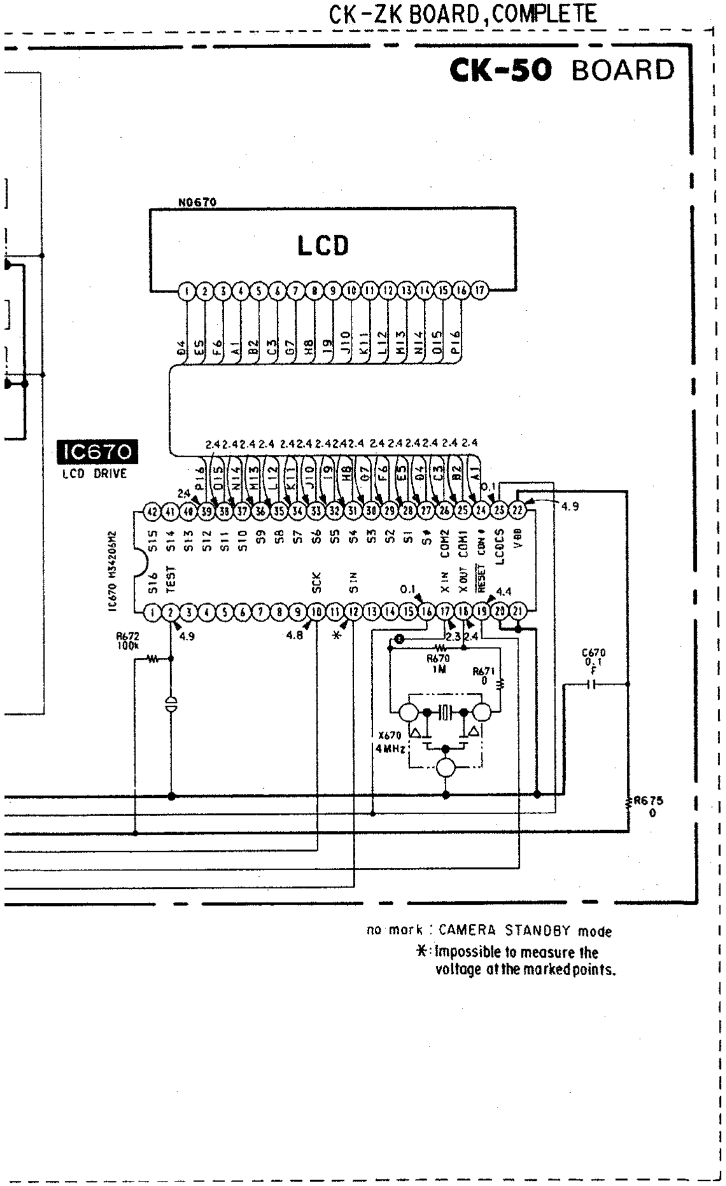

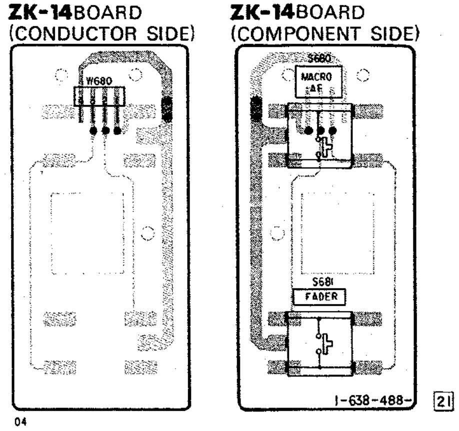

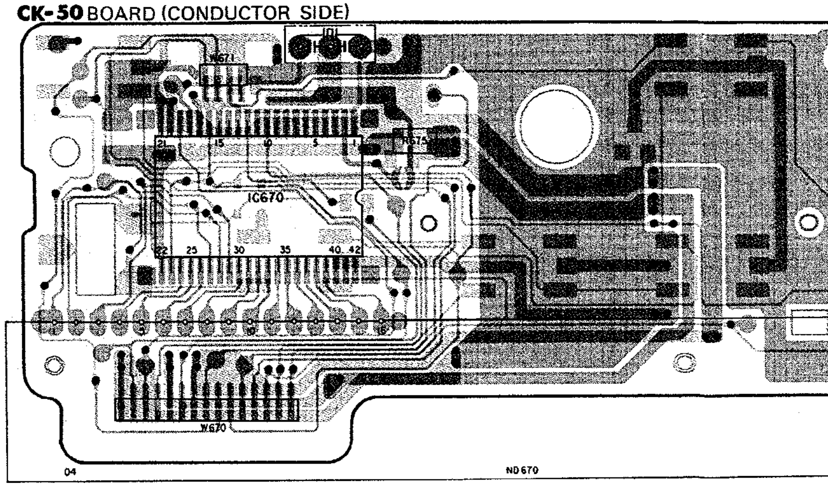

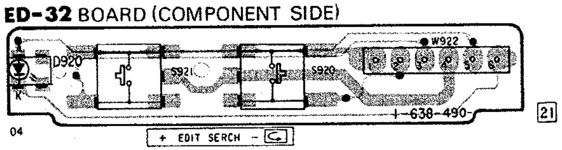

< DIODE >
D920 8-719-941-34 GL1HD5

< IC >
IC950 8-759-145-63 uPD7564G-540

< TRANSISTOR >
Q950 8-729-901-01 DTC144EK

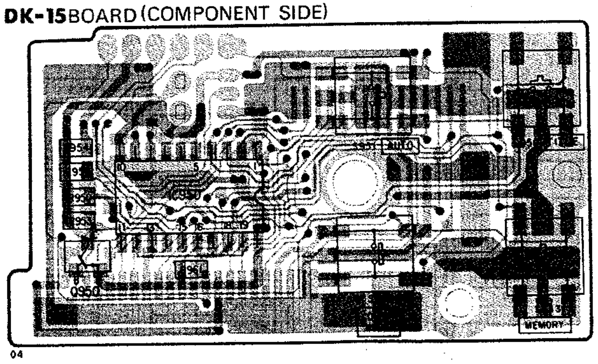

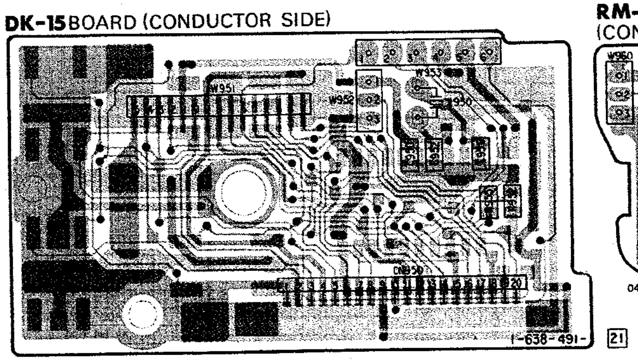

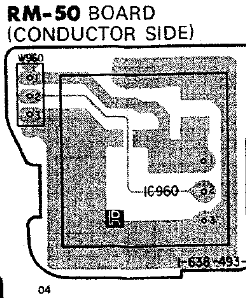

< IC >
IC960 8-

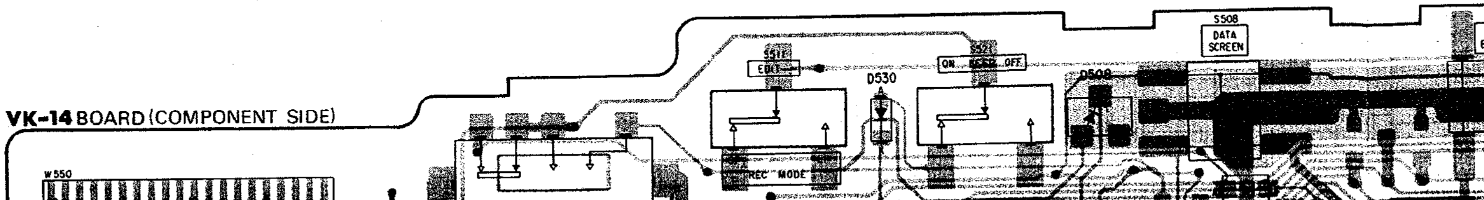

, LI-39 (LITHIUM BATTERY TERMINAL), RM-50 (REMOTE CONTROL RECEIVER), VK-14 (FUNCTION SWITCH), ZK-14 (SWITCH) PRINTED WIRING BOARDS
VK-14 and ZK-14 BOARDS : 5000 series—

< DIODE >

D671	8-719-404-46	MA110
D672	8-719-404-46	MA110

< IC >

IC670	8-759-634-72	M34206M2-109FP

CK-50 BOARD (CONDUCTOR SIDE)

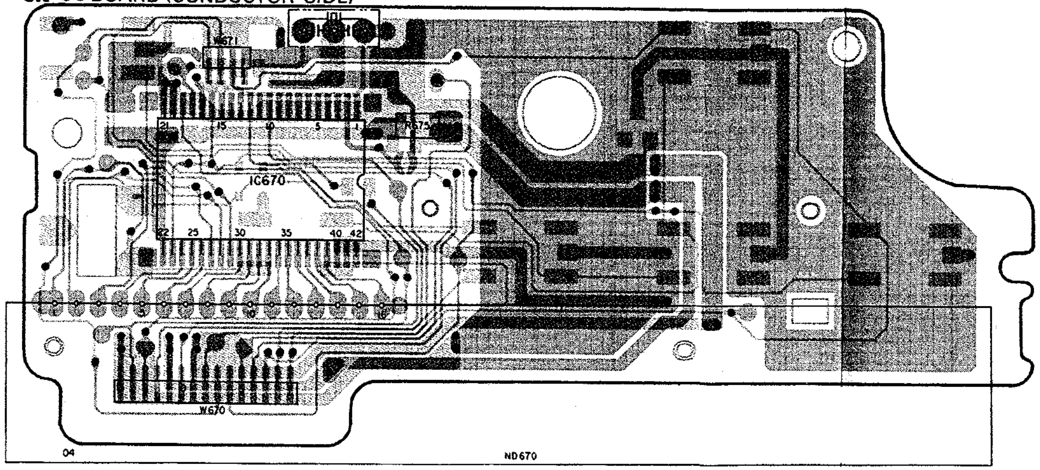

CK-50 BOARD (COMPONENT SIDE)

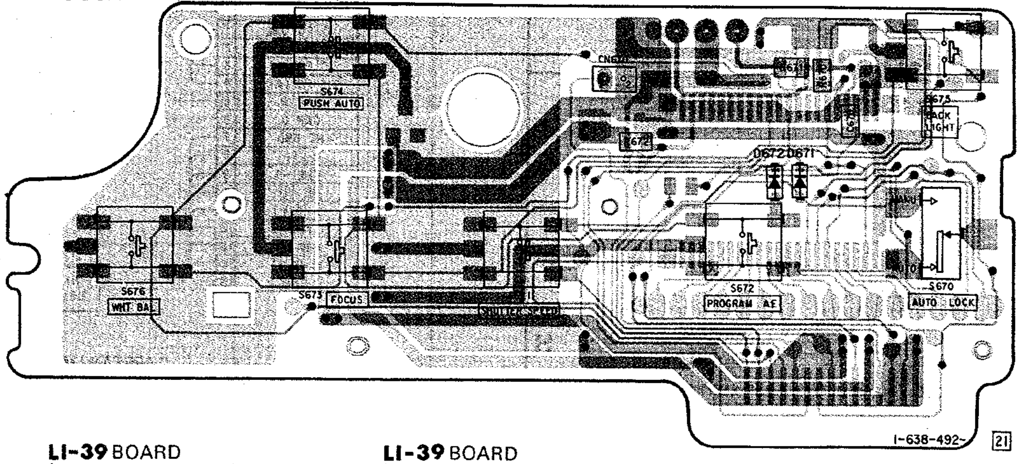

ED-32 BOARD (COMPONENT SIDE)

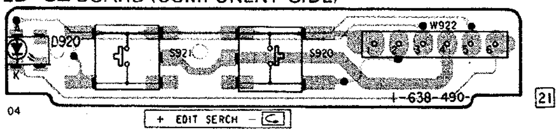

< DIODE >

D920	8-719-941-34	GL1HD51

DK-15 BOARD (CONDUCTOR SIDE)

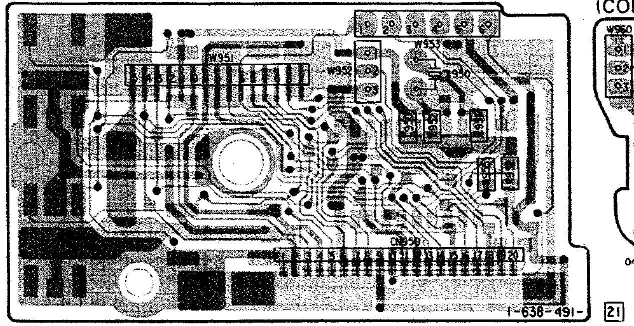

RM-50 BOARD (CONDUCTOR SIDE)

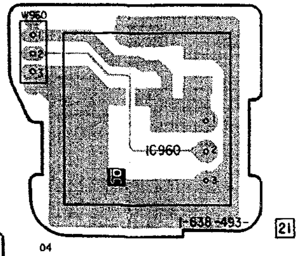

< IC >

IC960	8-749-921-76	GP1U56

LI-39 BOARD (CONDUCTOR SIDE)

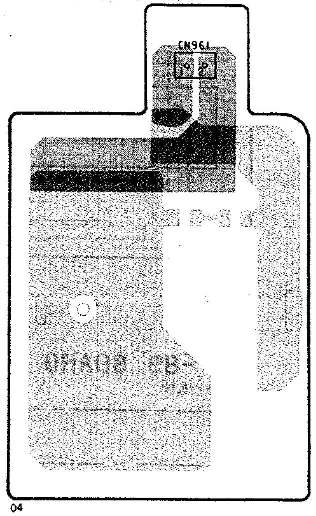

LI-39 BOARD (COMPONENT SIDE)

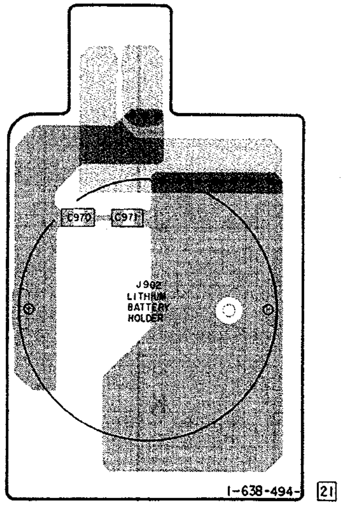

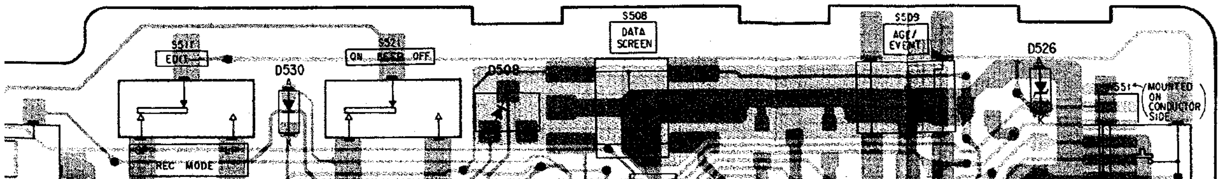

< DIODE >

D508	8-719-420-33	MA151K
D509	8-719-940-45	DWA010
D523	8-719-977-34	DTZ12
D524	8-719-977-34	DTZ12
D526	8-719-977-34	DTZ12

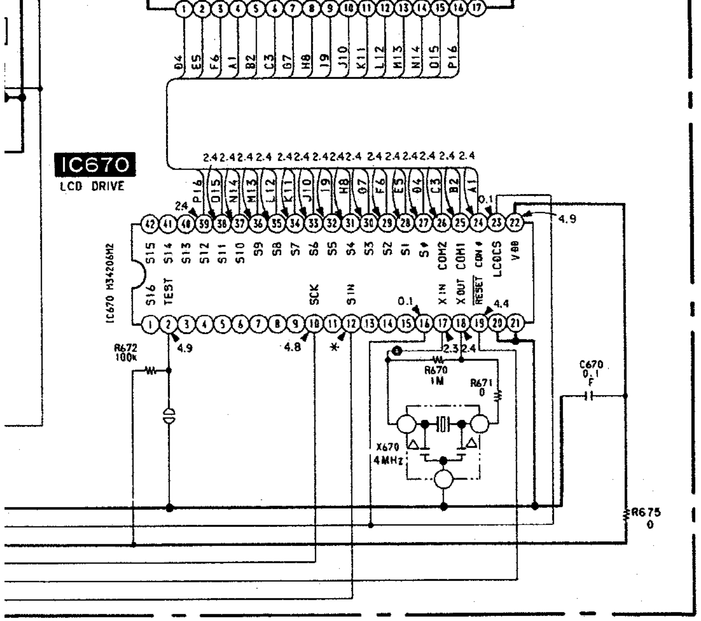

no mark : CAMERA STANDBY mode
✱: Impossible to measure the voltage at the marked points.

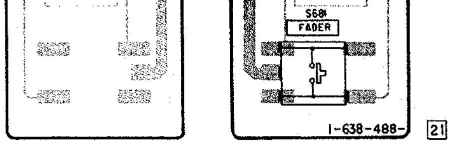

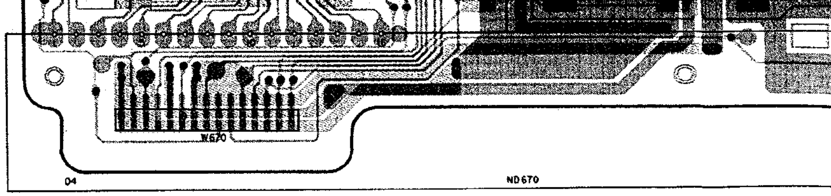

< IC >
IC950 8-759-145-63 uPD7564G-540

< TRANSISTOR >
Q950 8-729-901-01 DTC144EK

ED-32 BOARD (COMPONENT SIDE)

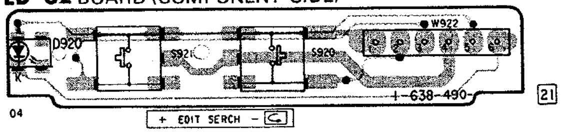

< DIODE >
D920 8-719-941-34 GL1HD5

DK-15 BOARD (COMPONENT SIDE)

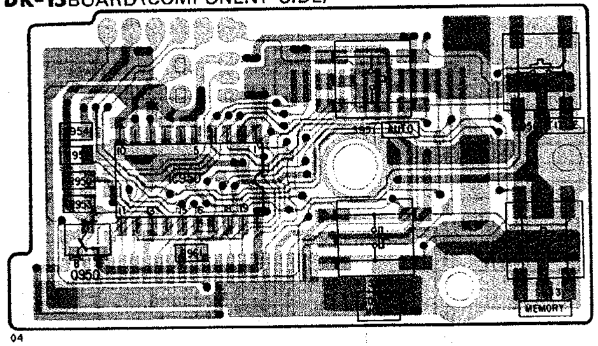

DK-15 BOARD (CONDUCTOR SIDE)

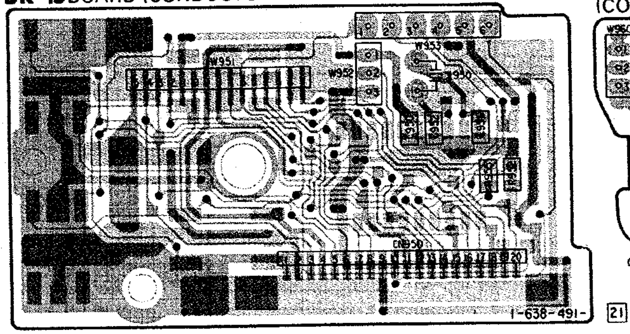

RM-50 BOARD (CONDUCTOR SIDE)

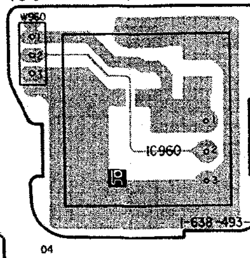

< IC >
IC960 8-

VK-14 BOARD (COMPONENT SIDE)

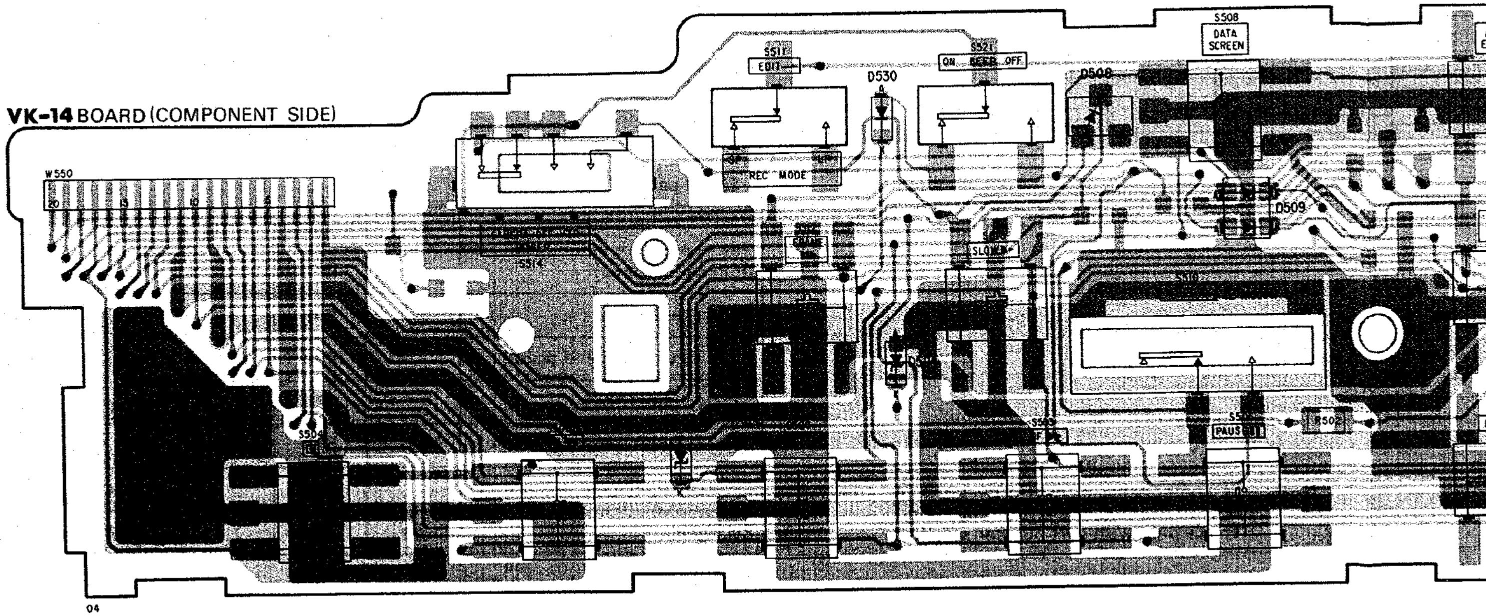

FUNCTION FUN

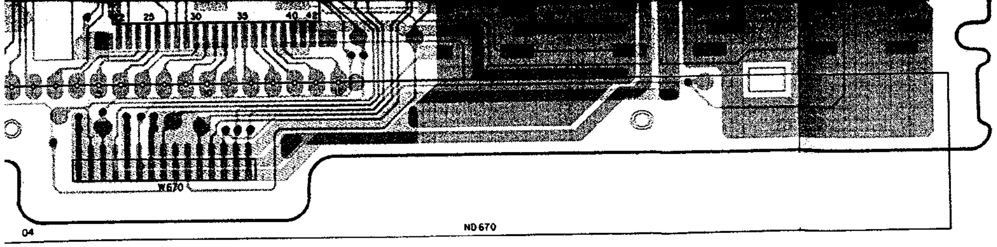

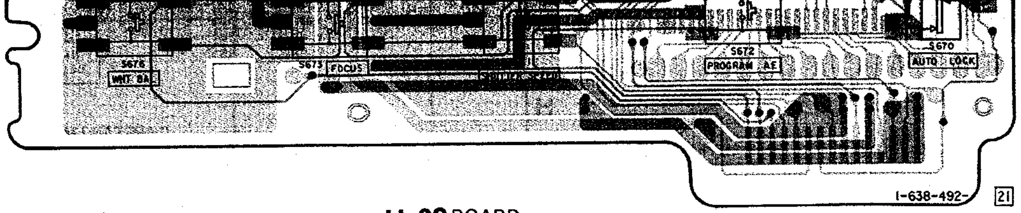

21

LI-39 BOARD (CONDUCTOR SIDE)

LI-39 BOARD (COMPONENT SIDE)

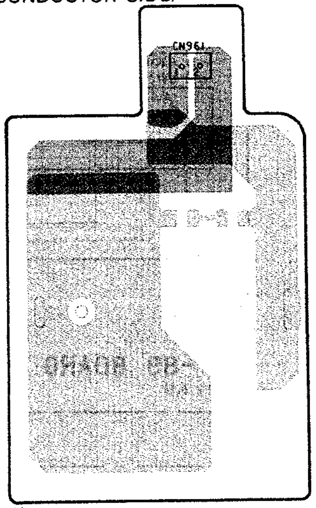

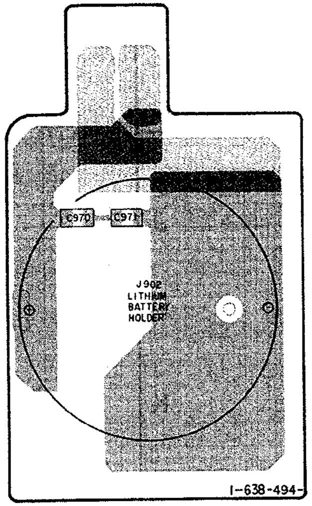

21

2 BOARD (COMPONENT SIDE)

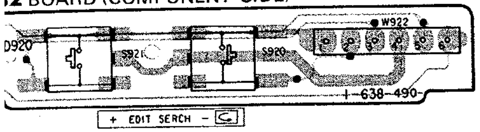

21

< DIODE >

D920	8-719-941-34	GL1HD51

5 BOARD (CONDUCTOR SIDE)

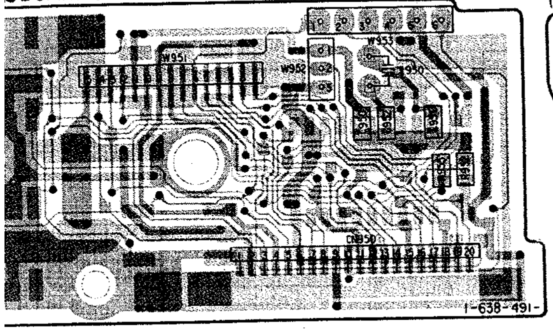

21

RM-50 BOARD (CONDUCTOR SIDE)

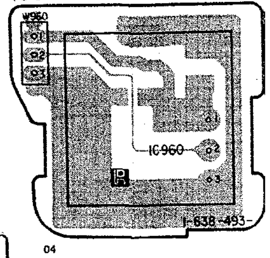

21

< IC >

IC960	8-749-921-76	GP1U56

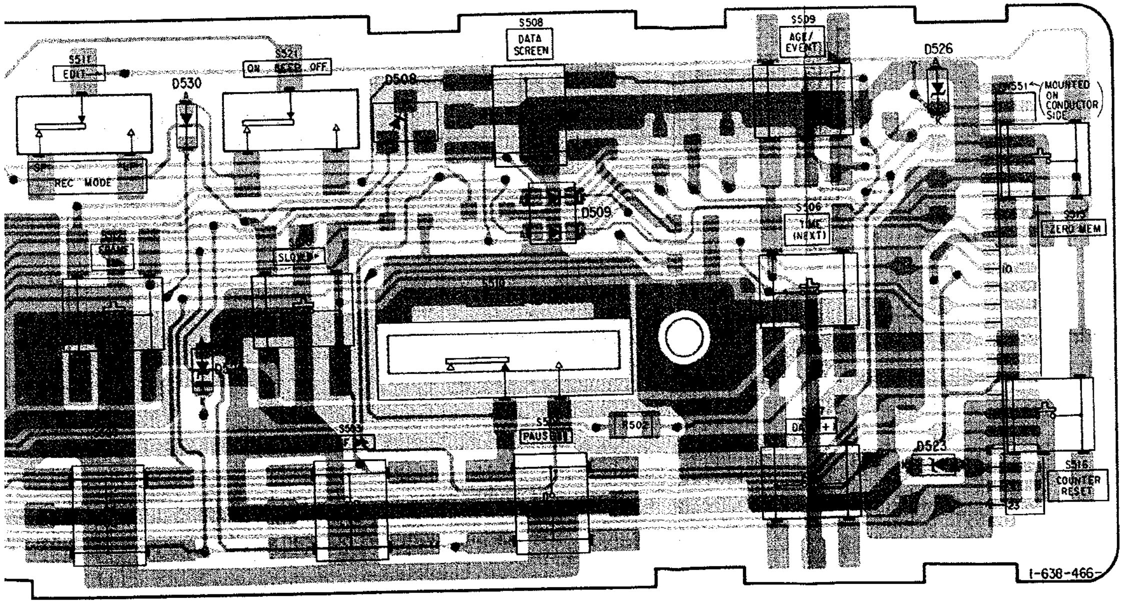

21

< DIODE >

D508	8-719-420-33	MA151K
D509	8-719-940-45	DWA010
D523	8-719-977-34	DTZ12
D524	8-719-977-34	DTZ12
D526	8-719-977-34	DTZ12
D527	8-719-977-34	DTZ12
D530	8-719-404-46	MA110

FUNCTION FUNCTION

FU-100 (MODE CONTROL, MAIN BATTERY TERMINAL) SCHEMATIC DIAGRAM

—Ref. No. FU-100 BOARD: 5000 series—

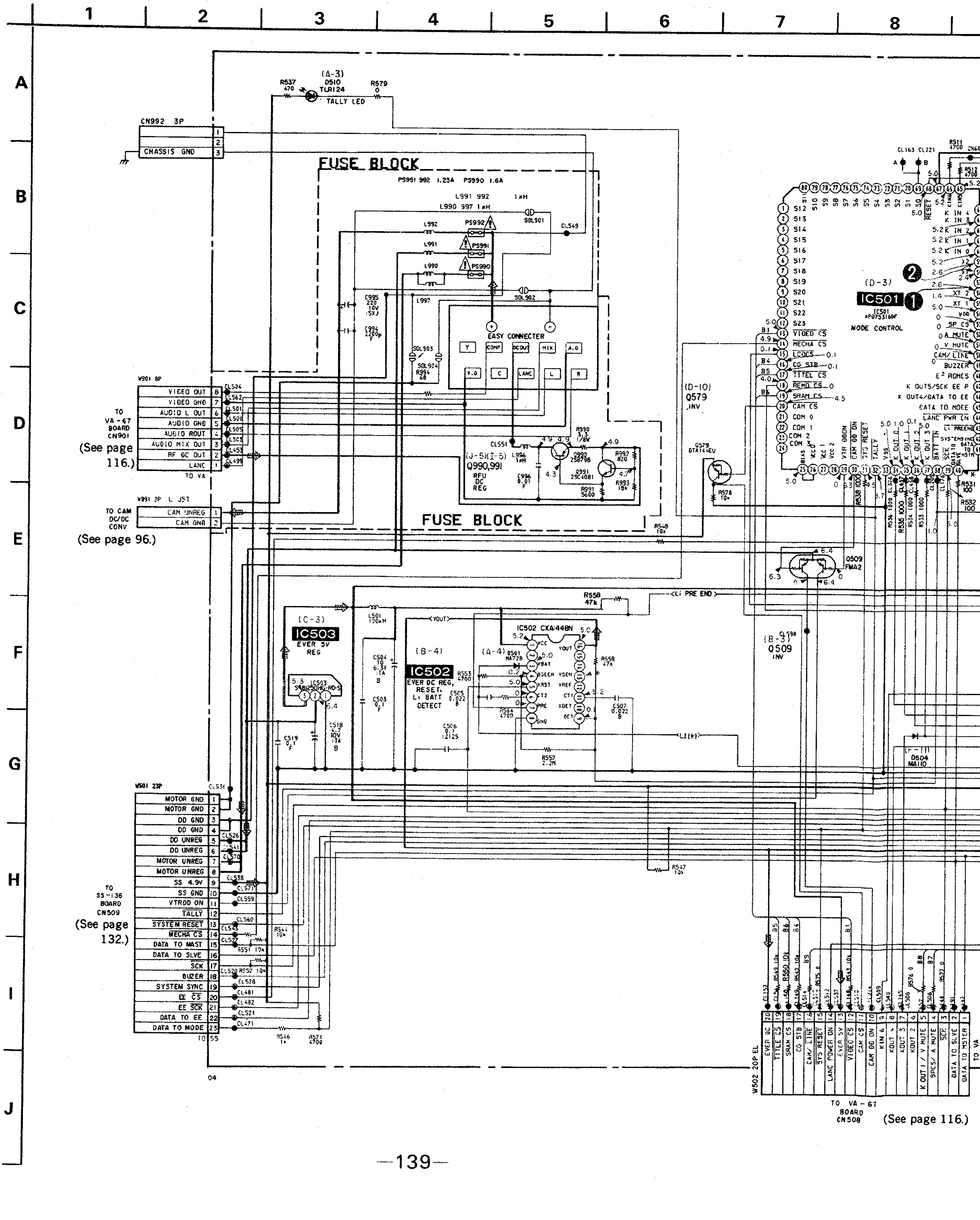

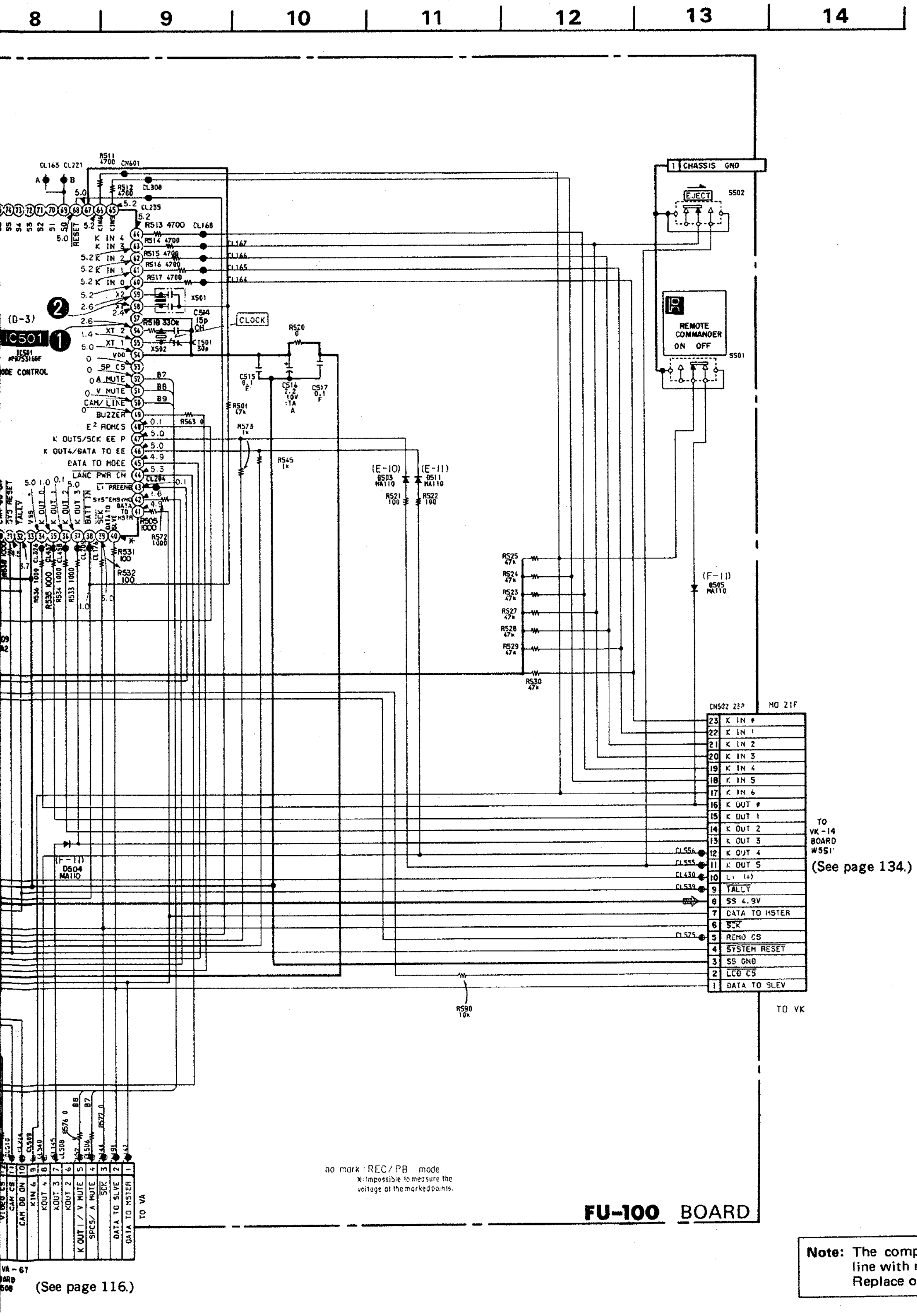

Note: The components identified by mark ⚠ or dotted line with mark ⚠ are critical for safety. Replace only with part number specified.

FU-100 (MODE CONTROL, MAIN BATTERY TERMINAL) PRINTED WIRING BOARD

—Ref. No. FU-100 BOARD : 5000 series—

FU-100 BOARD (COMPONENT SIDE)

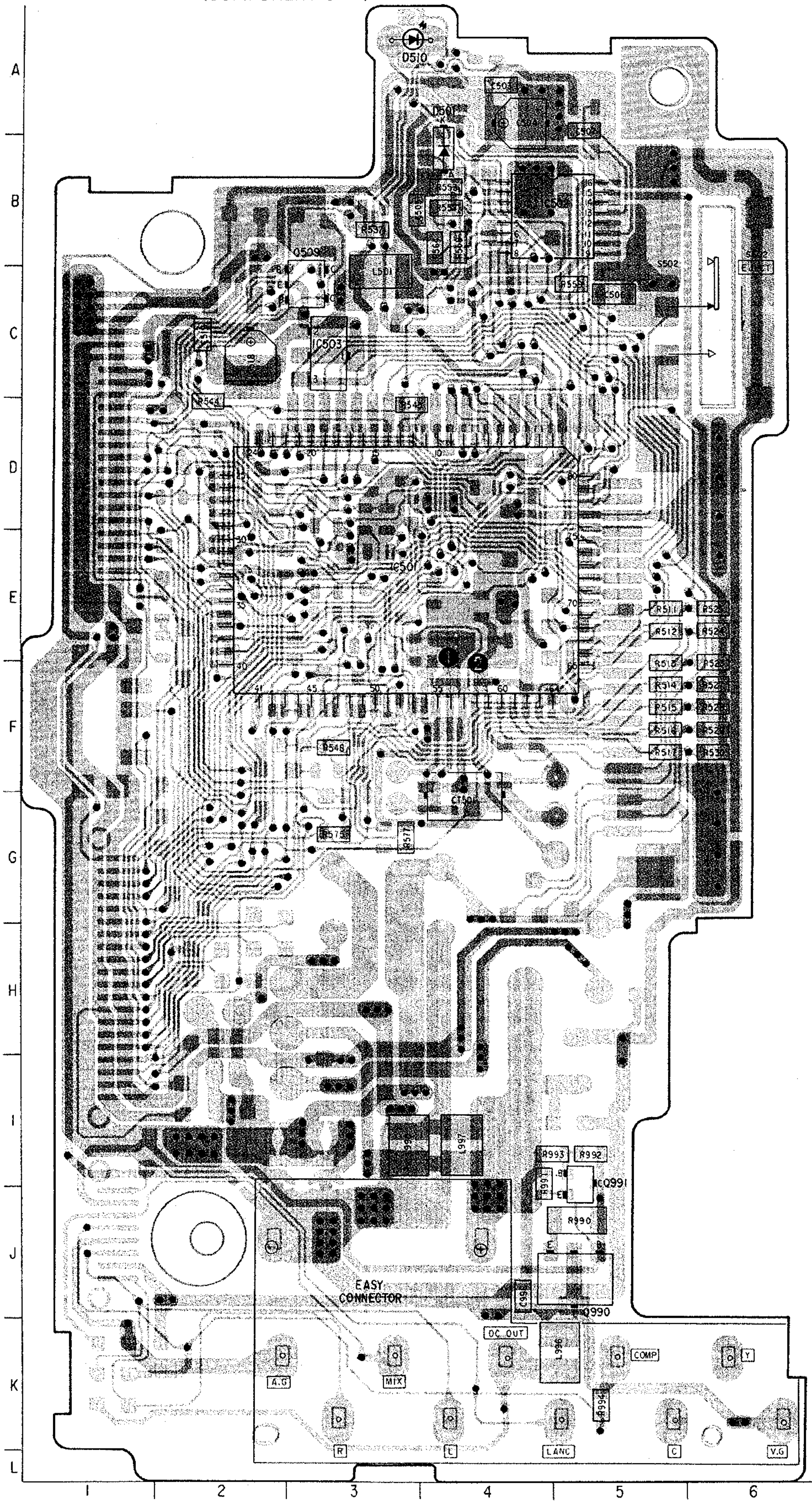

FU-100 BOARD (COND

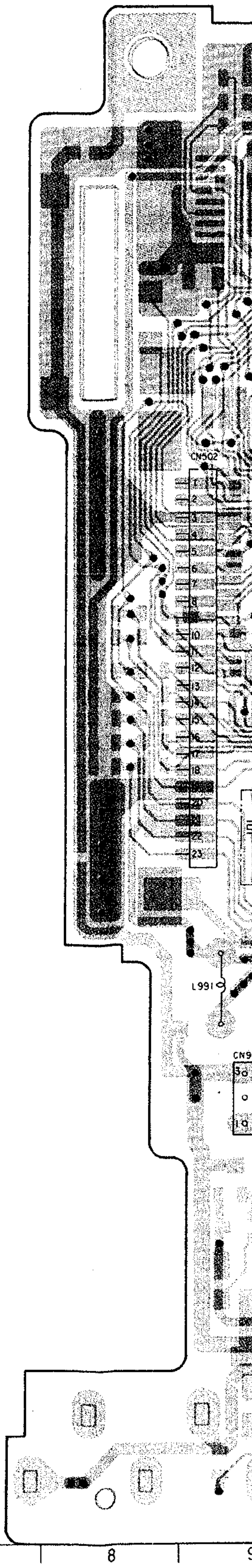

mark ⚠ or dotted
r safety.
specified.

FU-100 BOARD (CONDUCTOR SIDE)

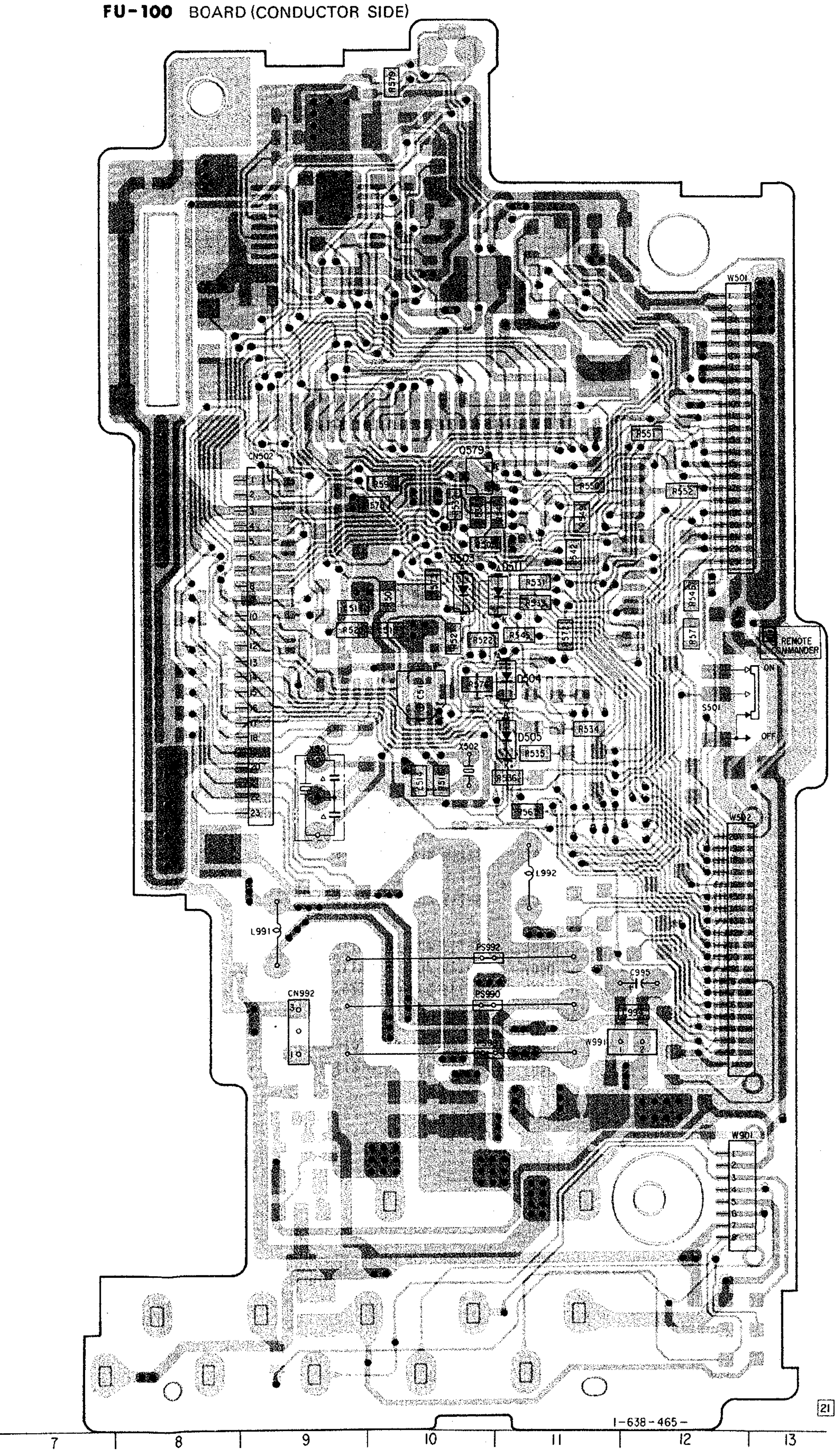

< DIODE >

D501	8-719-421-27	MA728
D503	8-719-404-46	MA110
D504	8-719-404-46	MA110
D505	8-719-404-46	MA110
D510	8-719-812-41	TLR124, RED
D511	8-719-404-46	MA110

< IC >

IC501	8-759-154-18	uPD75316GF-116-3B9
IC502	8-759-511-22	CXA1448N-E2
IC503	8-759-937-54	S-81250HG-RD-S

< TRANSISTOR >

Q509	8-729-904-20	FMA2
Q579	8-729-905-12	DTA144EU
Q990	8-729-101-07	2SB798-DK
Q991	8-729-905-35	2SC4081-R

FU-100 BOARD

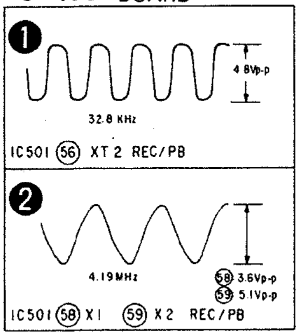

MC-76 (MIC), SW-183 (SWITCH, JACK) PRINTED WIRING BOARDS

—Ref. No. MC-76 and SW-183 BOARDS : 4000 series—

< DIODE >

D652	8-719-106-43	RD9.1M-B1
D655	8-719-404-46	MA110

< IC >

IC650	8-759-822-37	LA7293M-TE-L

< TRANSISTOR >

Q650	8-729-109-44	2SK94
Q651	8-729-905-35	2SC4081-R

MC-76 BOARD (COMPONENT SIDE)

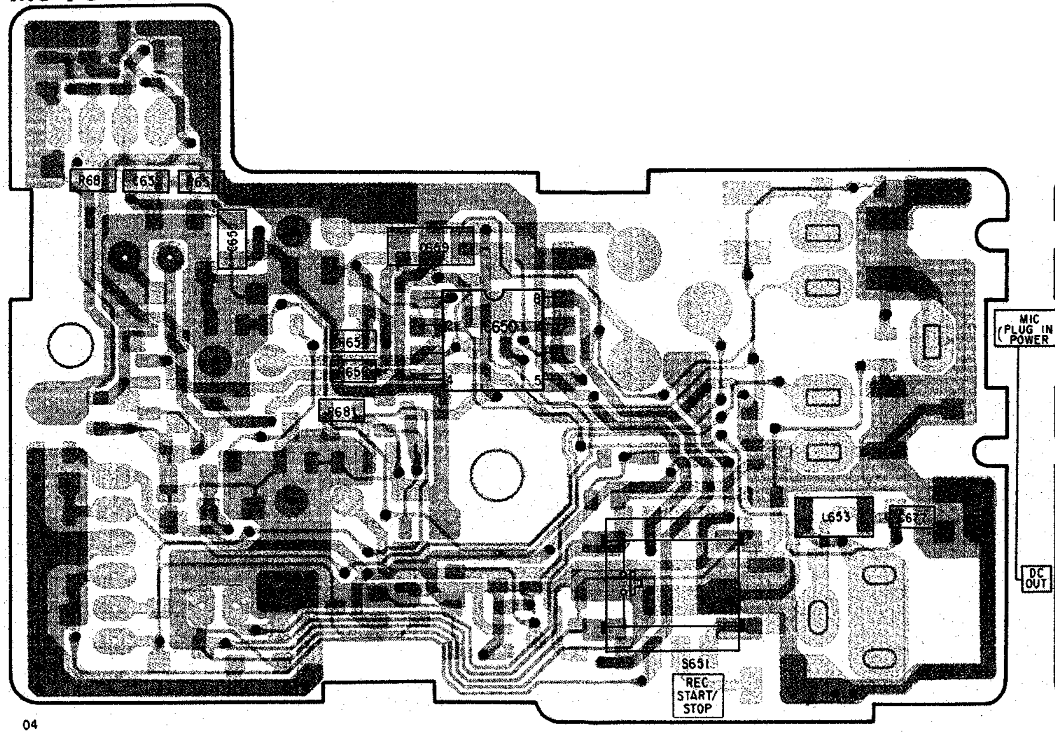

SW-183 BOARD (COMPONENT SIDE)

< DIODE >

D900	8-719-977-34	DTZ12
D901	8-719-977-34	DTZ12
D902	8-719-404-46	MA110
D903	8-719-977-34	DTZ12
D905	8-719-404-46	MA110
D906	8-719-404-46	MA110
D907	8-719-404-46	MA110
D908	8-719-976-97	DTZ5.1

< TRANSISTOR >

Q900	8-729-901-01	DTC144EK
Q901	8-729-902-XX	DTC114TK

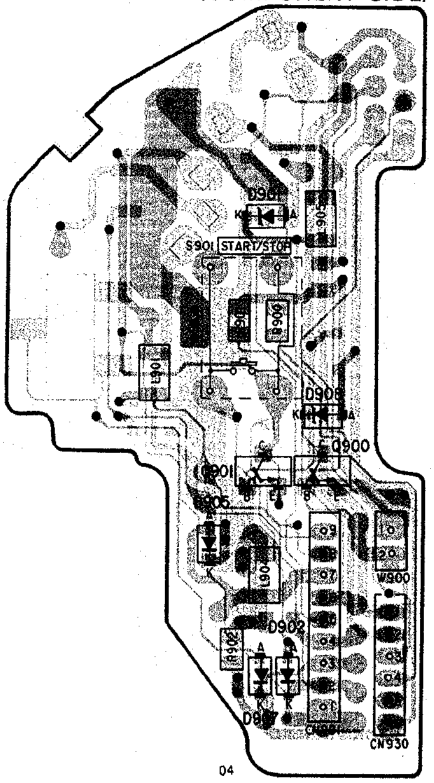

MC-76 BOARD(CONDUCTOR SIDE)

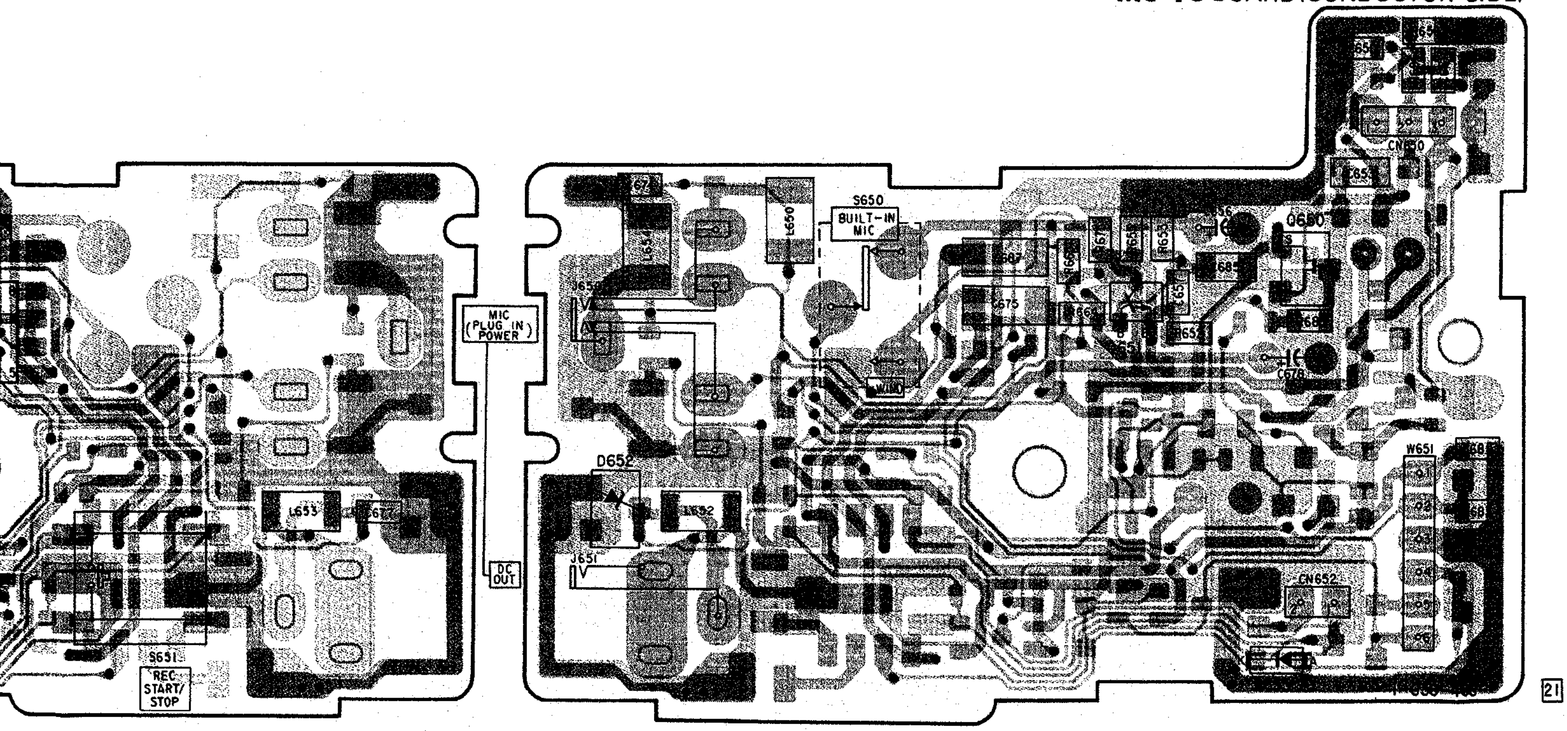

SW-183 BOARD
(COMPONENT SIDE)

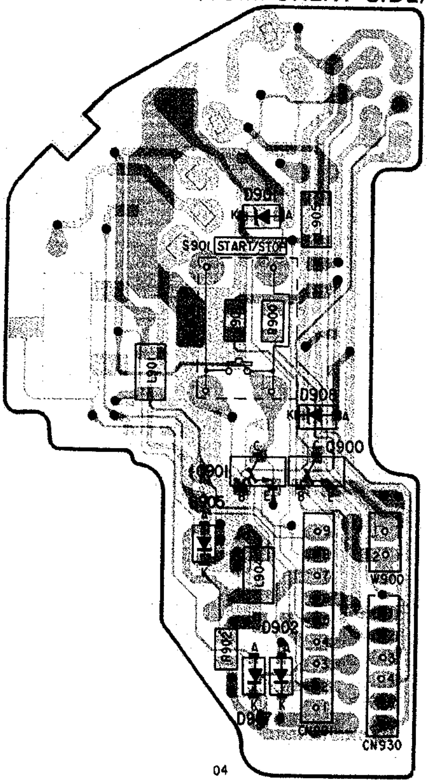

SW-183 BOARD
(CONDUCTOR SIDE)

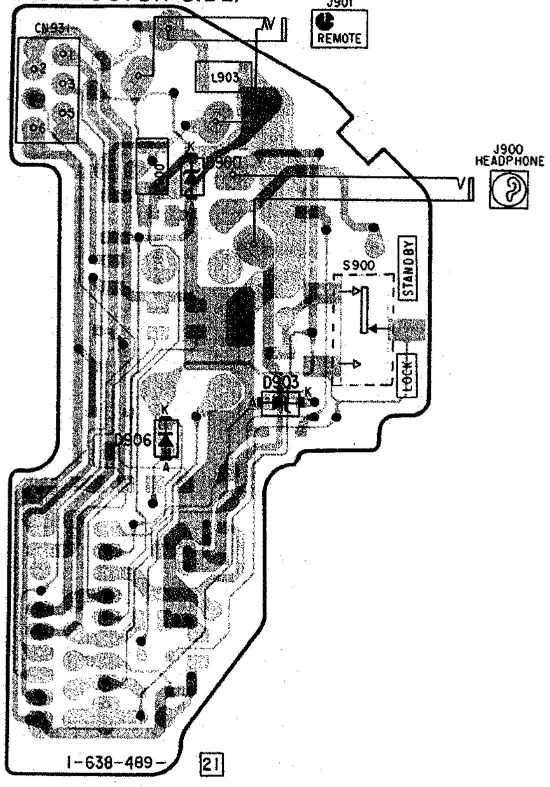

MC-76 (MIC), SW-183 (SWITCH, JACK) SCHEMATIC DIAGRAM

—Ref. No. MC-76 and SW-183 BOARDS: 4000 series—

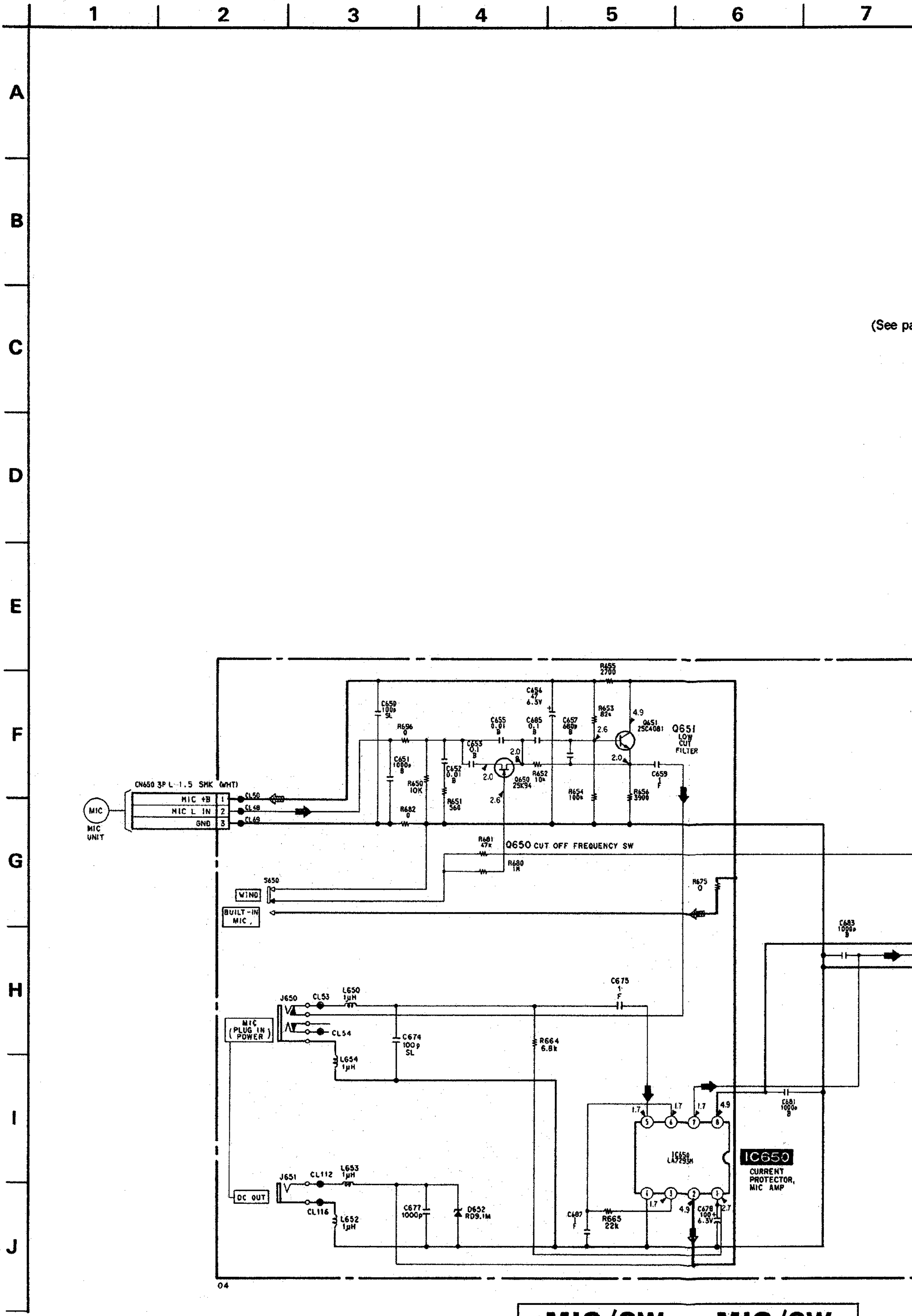

• Signal path

	AUDIO Signal
REC	➡

MIC/SW MIC/SW

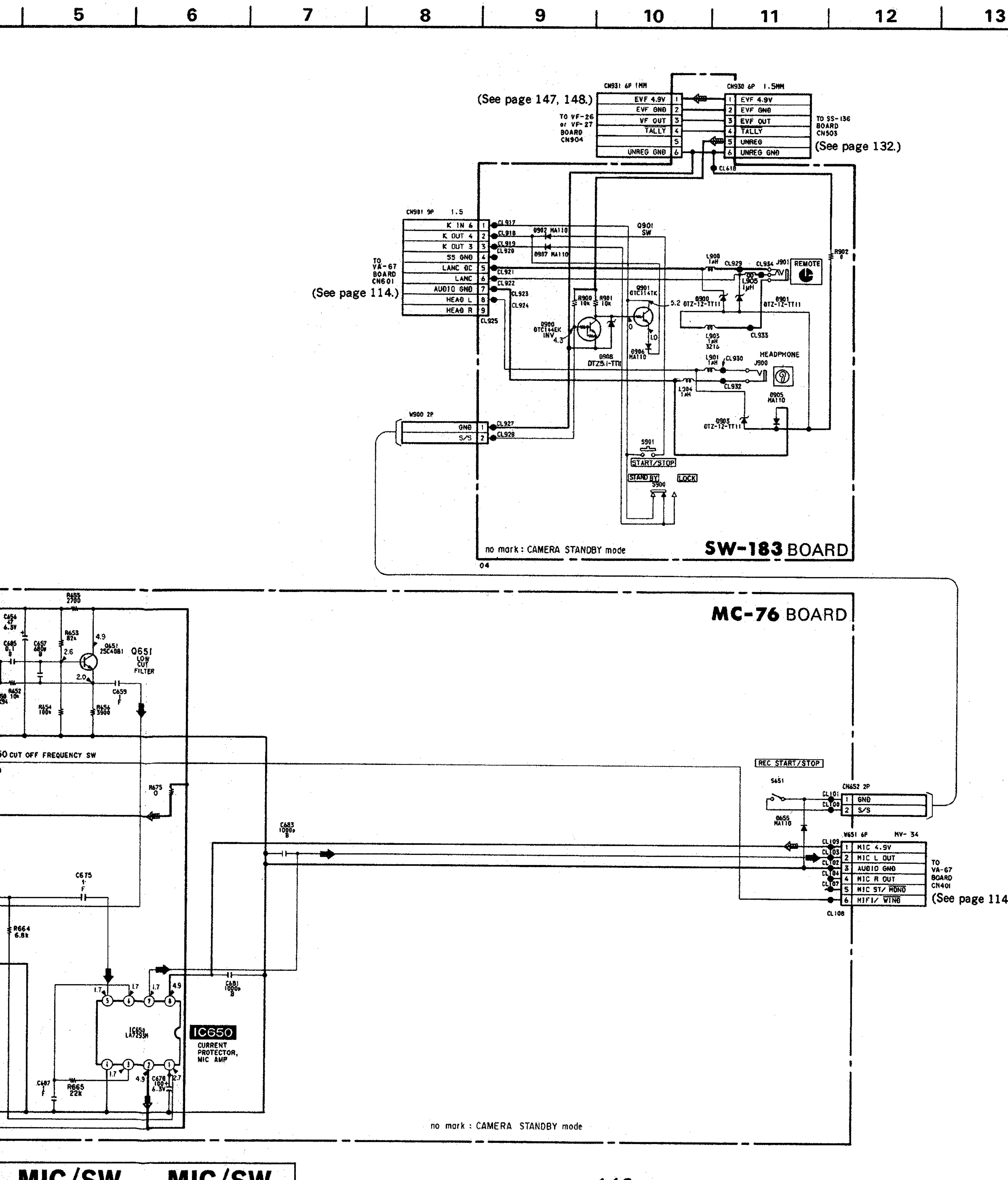
5
6
7
8
9
10
11
12
13
(See page 147, 148.)
TO VF-26 or VF-27 BOARD CN904
CN931 6P 1MM
EVF 4.9V
EVF GND
VF OUT
TALLY
UNREG GND
CN930 6P 1.5MM
EVF 4.9V
EVF GND
EVF OUT
TALLY
UNREG
UNREG GND
TO SS-136 BOARD CN503
(See page 132.)
CN901 9P 1.5
K IN 6
K OUT 4
K OUT 3
SS GND
LANC DC
LANC
AUDIO GND
HEAD L
HEAD R
TO VA-67 BOARD CN601
(See page 114.)
Q901 SW
REMOTE
HEADPHONE
W900 2P
GND
S/S
START/STOP
STAND BY
LOCK
no mark : CAMERA STANDBY mode
SW-183 BOARD
MC-76 BOARD
Q651 LOW CUT FILTER
CUT OFF FREQUENCY SW
REC START/STOP
CN652 2P
GND
S/S
W651 6P
MV-34
MIC 4.9V
MIC L OUT
AUDIO GND
MIC R OUT
MIC ST/ MONO
HIFI/ WING
TO VA-67 BOARD CN401
(See page 114
IC650
CURRENT PROTECTOR, MIC AMP
no mark : CAMERA STANDBY mode

MIC/SW MIC/SW

VF-26, VF-27 (VIEWFINDER) PRINTED WIRING BOARDS AND SCHEMATIC DIAGRAM

—Ref. No. VF-26 BOARD: 6000 series, VF-27 BOARD: 7000 series—

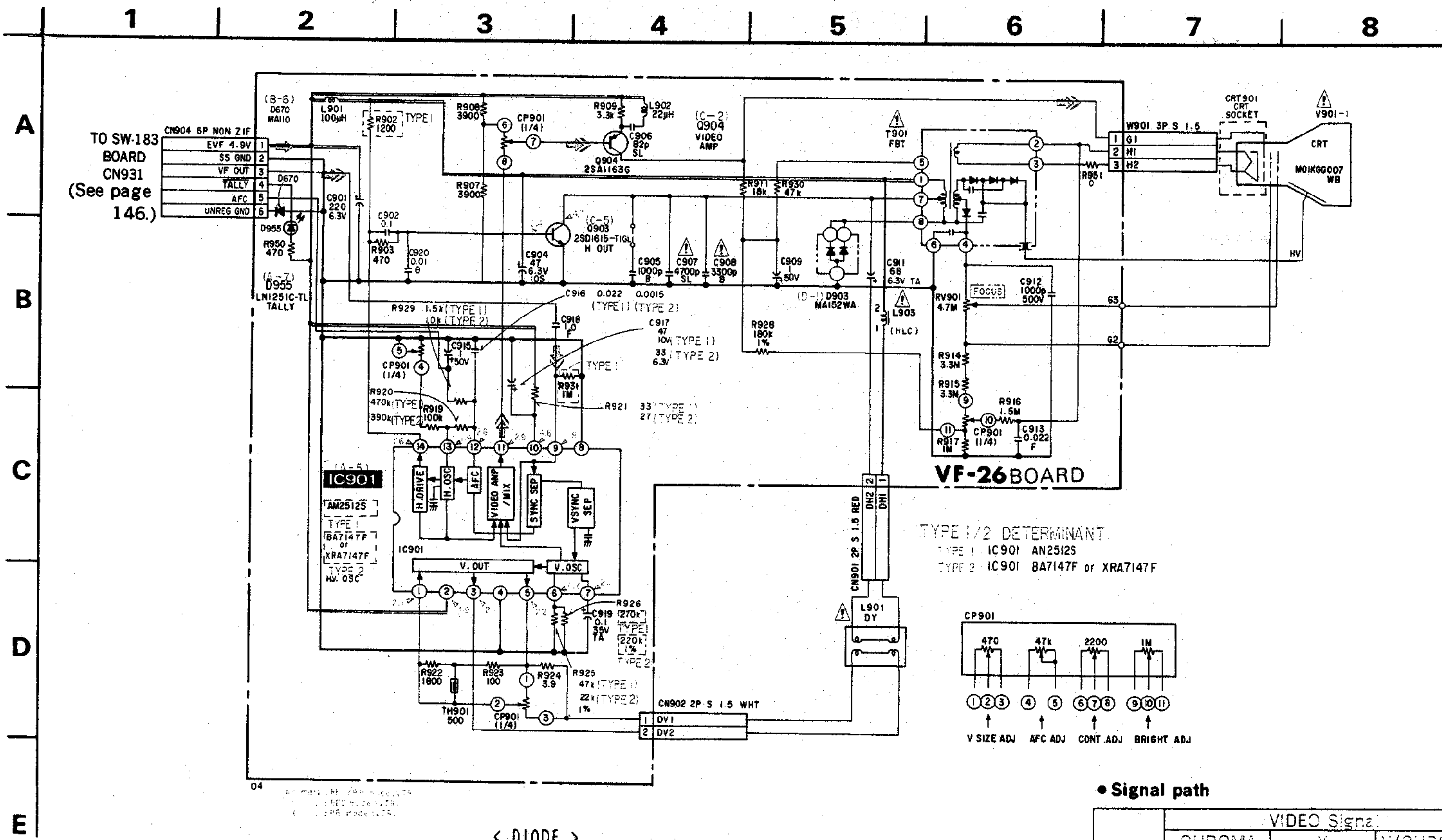

• Signal path

	VIDEO Signal		
	CHROMA	Y	Y/CHR
REC			

< DIODE >

D670	8-719-404-46	MA110
D903	8-719-400-20	MA152WA
D955	8-719-404-19	LN1251C

< IC >

IC901	8-759-420-01	AN2512S (TYPE 1)
IC901	8-759-511-01	BA7147F (TYPE 2)

< TRANSISTOR >

Q903	8-729-106-68	2SD1615
Q904	8-729-216-31	2SA1163G

VF-26 BOARD (COMPONENT SIDE)

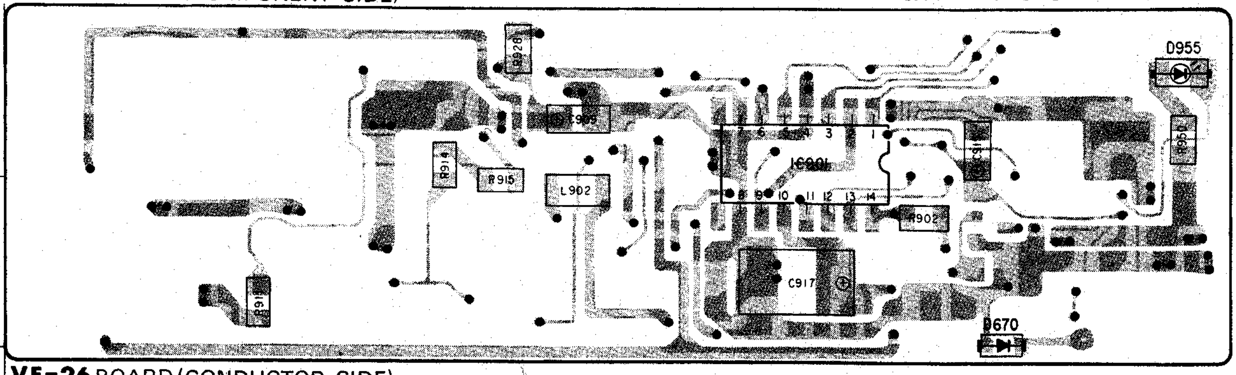

VF-26 BOARD (CONDUCTOR SIDE)

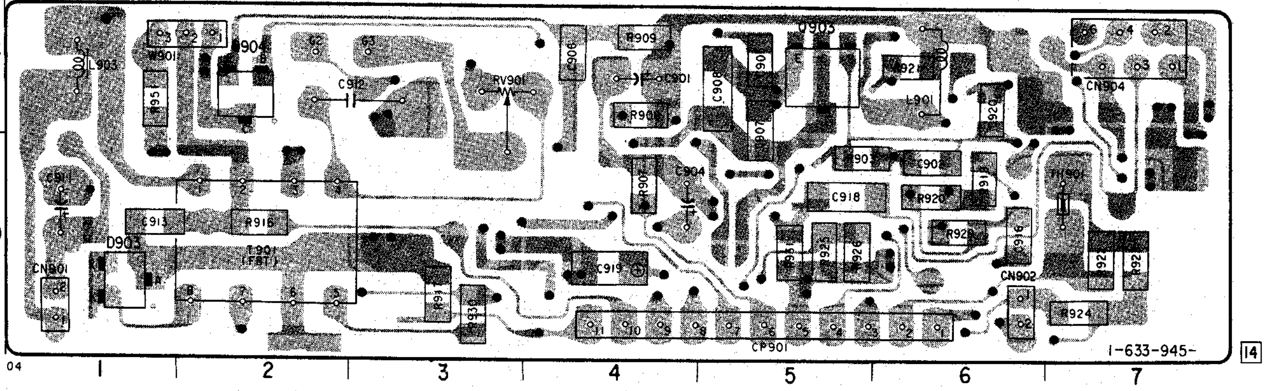

7	8	9	10	11	12	13	14	15

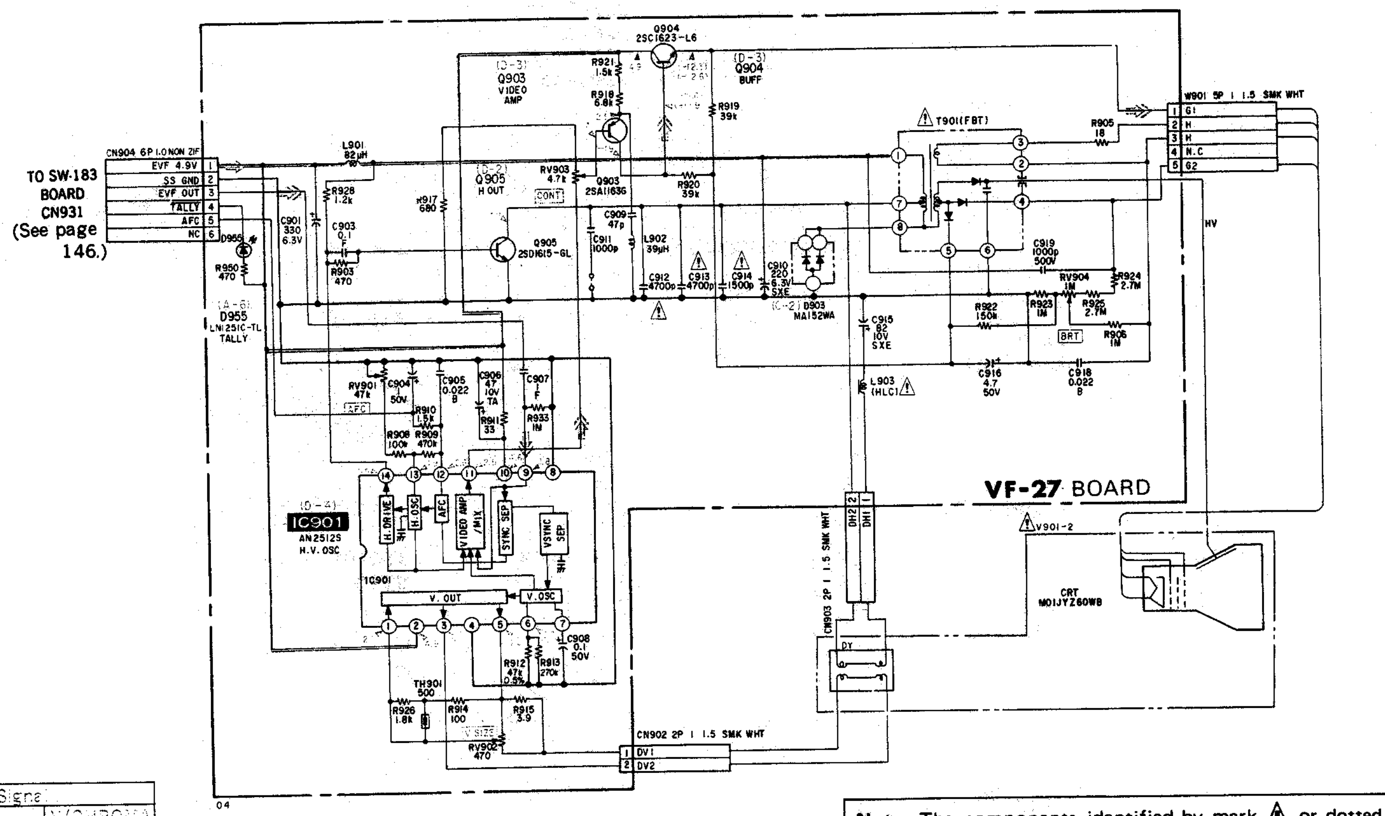

gnal path

	VIDEO Signal		
	CHROMA	Y	Y/CHROMA
C	⇒	⇛	⇛

Note: The components identified by mark ⚠ or dotted line with mark ⚠ are critical for safety. Replace only with part number specified.

< DIODE >

D903	8-719-400-20	MA152WA
D955	8-719-404-19	LN1251C

< IC >

IC901	8-759-420-01	AN2512S

< TRANSISTOR >

Q903	8-729-216-31	2SA1163
Q904	8-729-100-66	2SC1623
Q905	8-729-106-68	2SD1615

VF-27 BOARD (COMPONENT SIDE)

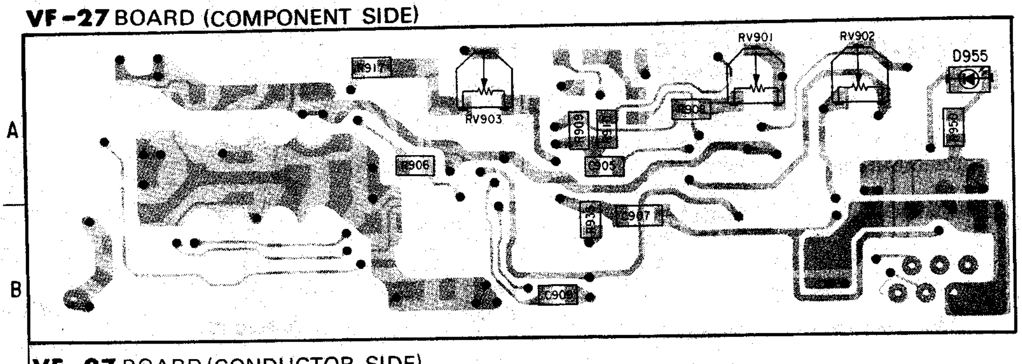

VF-27 BOARD (CONDUCTOR SIDE)

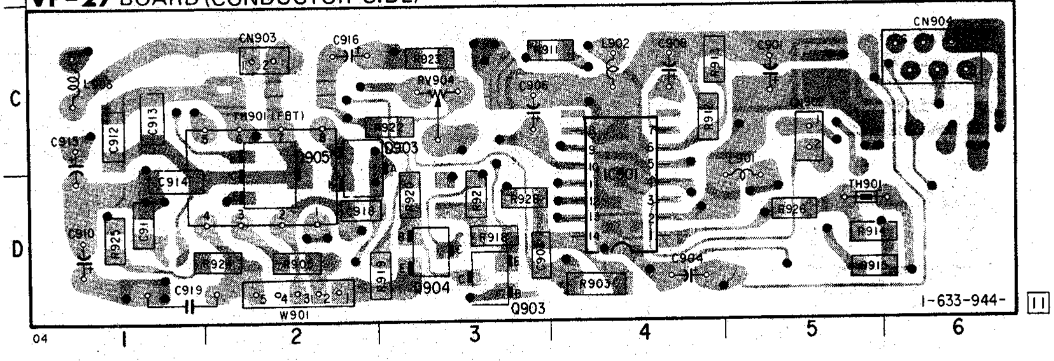

CCD-F45

4-3. SEMICONDUCTORS

AN2512S
BA7147F
CXA8010M
LM324D
TL1596CDSB
XRU4011BF
XRU4066BF

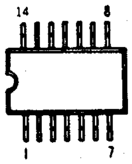

(TOP VIEW)

AK93C46F
BR93CS46F
HA118070FP
LA7293M
LM358D
LM393D
NJM2233AM
NJM2234M
NJM2235M
RC3414M
μPC393G2

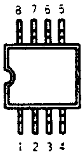

(TOP VIEW)

CXA1127M
CXA8006M

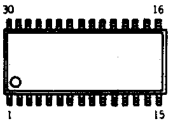

(Top view)

CXA1203N

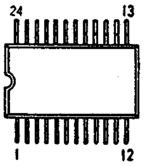

(TOP VIEW)

CXA1204Q

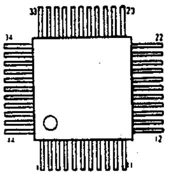

CXA1207R
MC68HC11E9

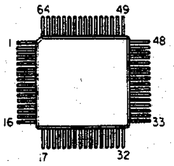

CXA1208R
CXA1392R
CXA1488R
MB3783PFV
MB673198U

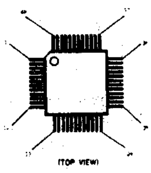

CXA1516Q
CXD1159Q

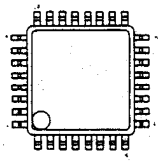

MARKING SIDE VIEW

CXA1448N
CXL1506M
MC14028BF
SN74HC4040NS

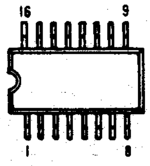

(TOP VIEW)

CXP80116
μPD75316GF

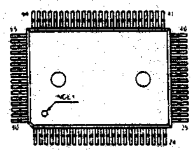

MARKING SIDE VIEW

MB88341PFV
MPC1737M
M62352GP
μPD6451G
μPD7564G-540

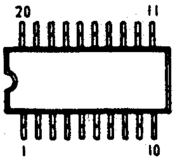

(TOP VIEW)

M34206M2-109FP

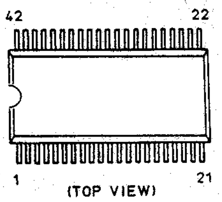

(TOP VIEW)

S-8054ALB-LM-S

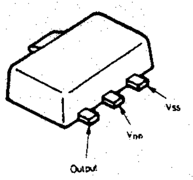

S-81250HG-RD-S

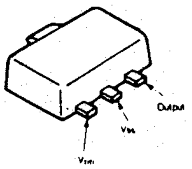

TC4S66F

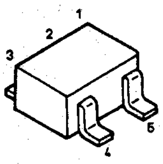

2SA1163
2SA1576-R
2SB624-BV345
2SC1623
2SC2223
2SC3395
2SC4081-R
2SC4176
2SD1819A
DTA144EU
DTC114EU
DTC114TK
DTC114TU
DTC144EK
DTC144EU
UN5210
UN5212
UN5215

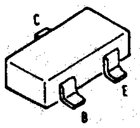

2SB1115A
2SB1121
2SB798-DL
2SD1615

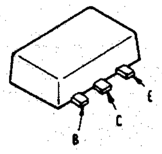

2SB1202FA

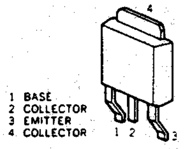

2SK1332-3
2SK300
2SK94

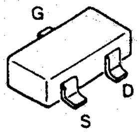

EE-109

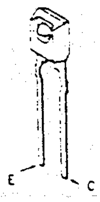

FC101

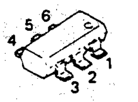

1 : 1E, 2 : 1B, 3 : 2C,
4 : 2E, 5 : 2B, 6 : 1C

FMA2
FMG2

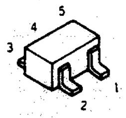

1 Tr1 :Collector 1
2 Tr2 :Collector 2
3 Tr2 :Base 2
4 Tr1,2 :Emitter
5 Tr1 :Base 1

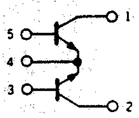

XN4601

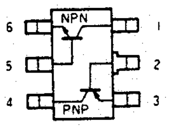

XN6213
XN6215
XN6401
XN6501

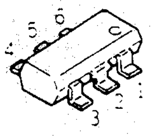

1 : 1C, 2 : 1B, 3 : 2C,
4 : 2B, 5 : 2E, 6 : 1E

1SS196
SB10-05PCP

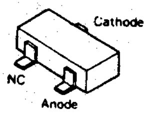

1SS226

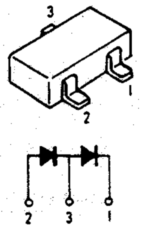

1T32

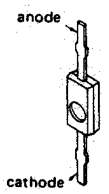

DAN202U

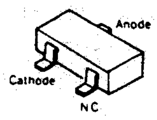

DTZ5.1
DTZ12
MA110
MA728
MA8051-M

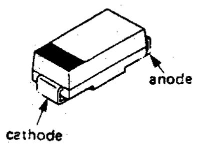

DWA010
MA151A

1. cathode
2. cathode
3. anode
4. anode

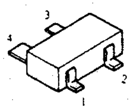

GL1HD51

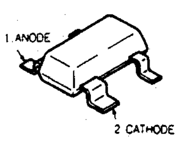

GL452S

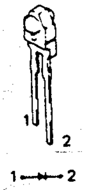

GP2S09-B
TLP907

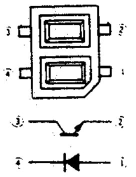

LN1251C

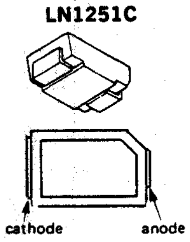

MA141WA
MA152WA

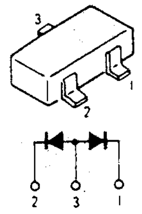

MA143

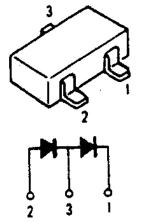

MA151K
SB05-05CP

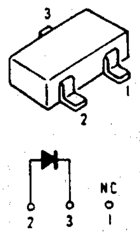

TLR124

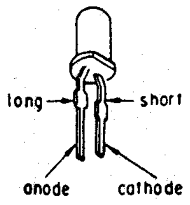

SECTION 5
EXPLODED VIEWS

NOTE:
- The mechanical parts with no reference number in the exploded views are not supplied.
- Items marked "*" are not stocked since they are seldom required for routine service. Some delay should be anticipated when ordering these items.
- -XX, -X mean standardized parts, so they may have some differences from the original one.
- Color Indication of Appearance Parts
  Example:
  KNOB, BALANCE (WHITE)...(RED)
  ↑ Parts Color ↑ Cabinet's Color
- Hardware(# mark) list is given in the last of this parts list.

The components identified by mark ⚠ or dotted line with mark ⚠ are critical for safety.
Replace only with part number specified.

5-1. CABINET (R) AND VTR PANEL (L) ASSEMBLIES

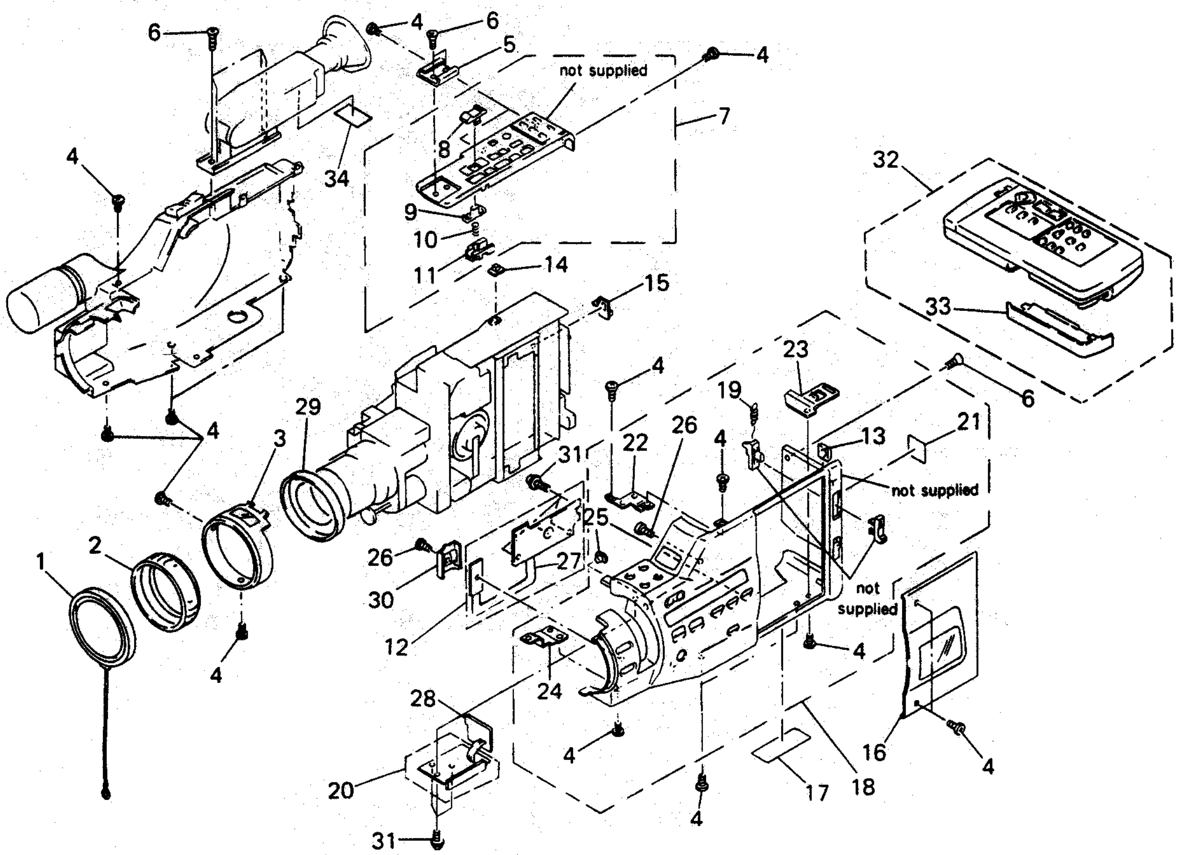

Ref. No.	Part No.	Description	Remark
1	A-7090-806-A	CAP ASSY, HOOD	
2	3-728-269-01	HOOD	
3	X-3940-366-1	HOOP ASSY, LENS	
4	3-719-381-01	SCREW (M2X4)	
5	3-724-511-01	SHOE, ACCESSORY	
6	3-719-831-21	SCREW (M2X4)	
7	X-3940-383-1	PANEL (M) ASSY, VTR (AEP/UK)	
	X-3940-857-1	PANEL (M) ASSY, VTR (E)	
8	3-744-723-01	BUTTON (10), POWER	
9	* 3-718-257-11	BUTTON, PUSH, POWER	
10	* 3-303-973-00	SPRING, COMPRESSION	
11	3-744-815-01	PLATE, BLIND, POWER	
12	* A-7071-413-A	CK-ZK BOARD, COMPLETE	
13	3-718-233-01	NUT, PLATE	
14	3-941-708-01	BUTTON (60), EDIT	
15	3-744-875-03	KNOB, REMOTE	
16	X-3940-384-1	LID (M) ASSY, CASSETTE	
17	* 3-941-749-01	LABEL, MODEL NUMBER (AEP)	
	* 3-943-353-01	LABEL, MODEL NUMBER (E/UK)	
18	X-3940-382-1	CABINET (R) ASSY	
19	3-674-402-00	SPRING, TENSION	
20	* A-7062-752-A	DK-ED BOARD, COMPLETE	
21	* 3-719-683-01	LABEL, BATTERY FITTING	
22	3-744-810-01	RETAINER, SHOE	
23	3-744-811-01	SHEET METAL (LOWER), STRAP	
24	3-744-821-01	JOINT, L/R	
25	3-744-847-01	GUIDE	
26	3-713-790-21	SCREW (M2X6), TAPPING, P3	
27	1-633-985-11	FP-298 FLEXIBLE BOARD	
28	* A-7062-751-A	RM-50 BOARD, COMPLETE	
29	3-744-839-01	RING, CHANGE	
30	3-744-812-01	SHEET METAL, ZK	
31	3-669-480-21	+ PTPWH 2	
32	1-465-395-41	COMMANDER, REMOTE (RMT-502) (E)	
32	1-465-395-81	COMMANDER, REMOTE (RMT-502) (AEP/UK)	
33	3-942-755-01	COVER, BATTERY	
34	* 3-704-235-01	LABEL, CAUTION (UK)	

5-2. CABINET (L) ASSEMBLY

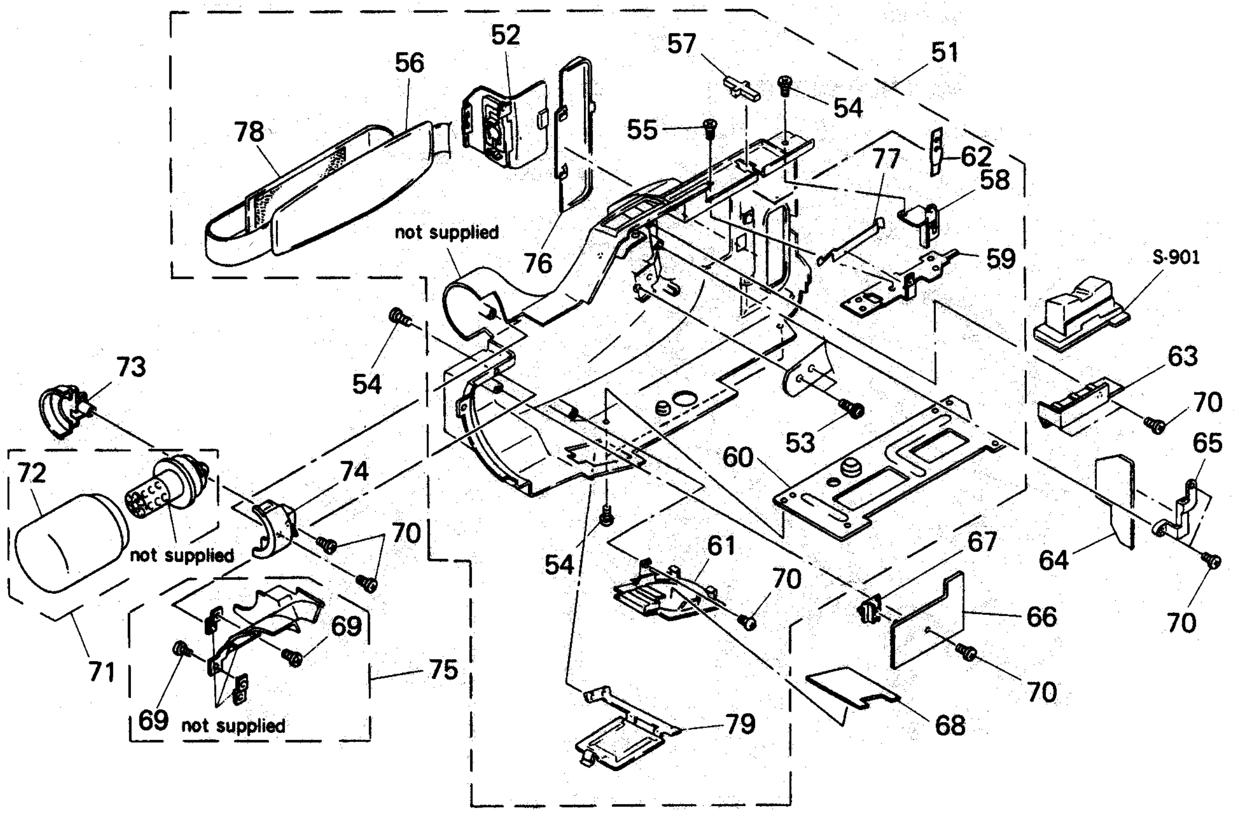

Ref. No.	Part No.	Description	Remark
51	A-7081-530-A	CABINET (L) BLOCK ASSY (AEP/UK)	
	A-7081-546-A	CABINET (L) BLOCK ASSY (E)	
52	X-3744-825-1	KNOB ASSY, SP	
53	3-669-480-21	+ PTPWH 2	
54	3-744-720-11	SCREW (M2X3)	
55	3-719-831-21	SCREW (M2X4)	
56	3-724-591-01	PAD, GRIP	
57	3-744-709-01	LOCK, SLIDE	
58	3-744-804-01	SHEET METAL (UPPER), STRAP	
59	X-3744-828-1	RETAINER ASSY, EVF	
60	X-3940-613-1	METAL ASSY, SHEET, TRIPOD	
61	3-744-841-01	HOLDER, LI PC BOARD	
62	3-744-872-01	SPRING, CN	
63	3-744-805-01	BUTTON (BASE), ZOOM	
64	* A-7071-416-A	SW-183 BOARD, COMPLETE	
65	3-744-808-01	RETAINER, SW	
66	A-7062-755-A	MC-76 BOARD, COMPLETE	
67	3-744-807-41	BUTTON, MICROPHONE	
68	A-7071-415-A	LI-39 BOARD, COMPLETE	
69	3-744-720-11	SCREW (M2X3)	
70	3-713-790-21	SCREW (M2X6), TAPPING, P3	
71	1-542-125-21	MICROPHONE (C-2027)	
72	3-707-650-11	SCREEN, WIND	
73	3-744-833-01	HOLDER, MICROPHONE	
74	3-744-834-01	HOUSING, MICROPHONE	
75	X-3744-803-1	COVER ASSY, LENS	
76	3-744-874-21	LID, CONNECTOR	
77	3-744-876-01	SPRING, EVF LOCK	
78	3-719-323-01	BELT, GRIP	
79	3-744-840-01	LID, BATTERY CASE	
S901	1-572-286-11	SWITCH, PUSH	

5-3. EVF ASSEMBLY

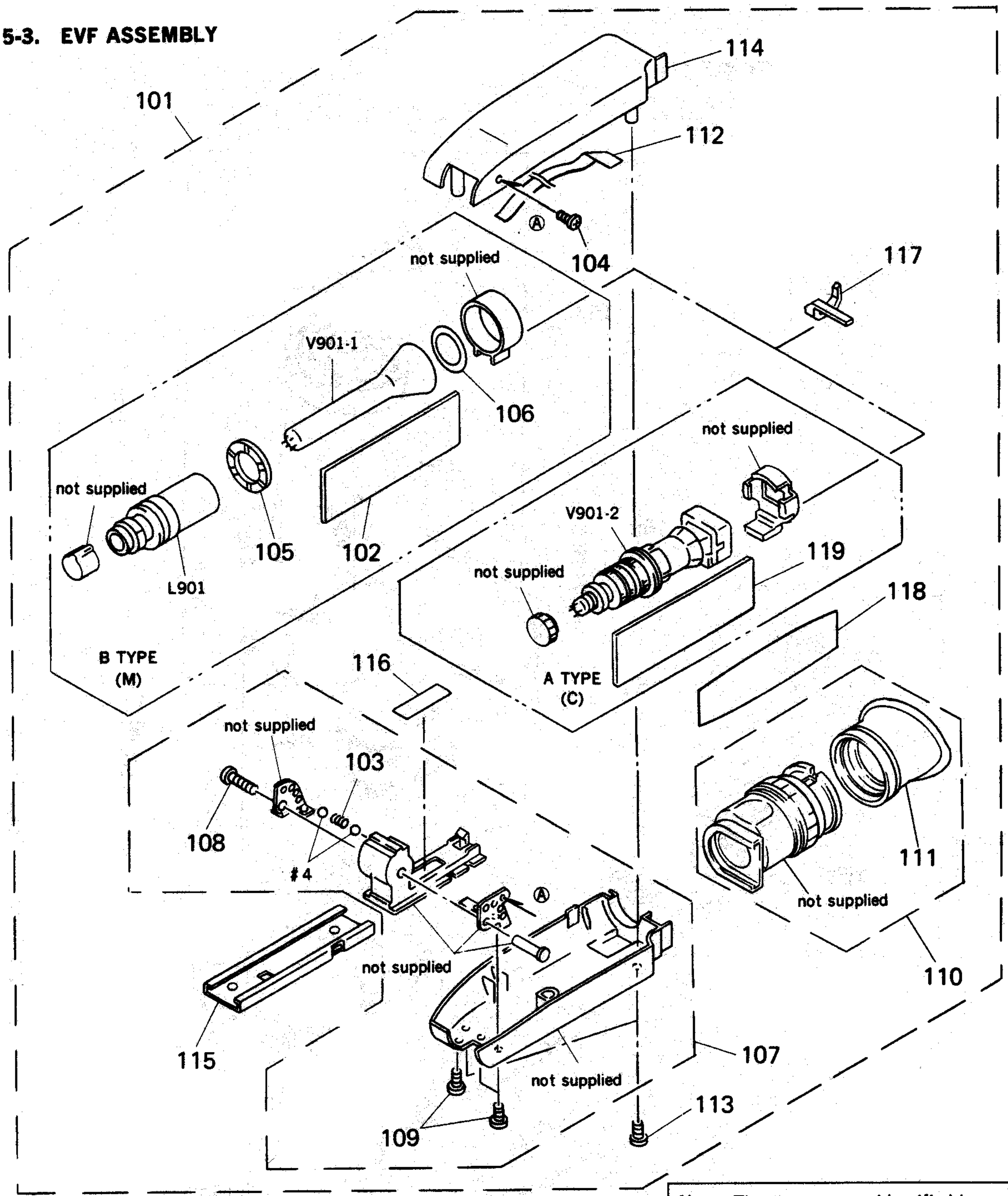

Note: The components identified by mark ⚠ or dotted line with mark ⚠ are critical for safety. Replace only with part number specified.

Ref. No.	Part No.	Description	Remark
101	A-7019-301-A	EVF (M) ASSY (B TYPE)	
102	* A-7062-278-A	VF-26 BOARD, COMPLETE (B TYPE)	
103	3-302-492-00	SPRING, COMPRESSION	
104	3-744-720-11	SCREW (M2X3)	
105	3-724-549-01	LOCK, CRT (B TYPE)	
106	3-724-570-01	RING, CRT FIXED (B TYPE)	
107	X-3744-701-1	CASE ASSY, LOWER, VF	
108	3-732-012-11	SCREW (M2X5)	
109	3-744-720-11	SCREW (M2X3)	
110	X-3940-369-1	FINDER (S) ASSY, SPORTS	
111	3-749-142-02	EYE CUP	

Ref. No.	Part No.	Description	Remark
112	1-634-011-11	FP-264 FLEXIBLE BOARD	
113	3-713-790-31	SCREW (M2X8), TAPPING, P3	
114	3-744-705-01	CASE, VF (UPPER)	
115	3-744-712-01	SHOE, VF	
116	3-744-716-01	COVER, FL	
117	3-744-722-01	GUIDE, VF TALLY	
118	3-744-775-01	INSULATOR, VF	
119	* A-7062-279-A	VF-27 BOARD, COMPLETE (A TYPE)	
L901 ⚠	1-451-310-21	DEFLECTION YOKE (B/W) (B TYPE)	
V901-1 ⚠	1-546-085-11	CATHODE-RAY TUBE, B/W (B TYPE)	
V901-2 ⚠	1-452-482-11	CRT ASSY (M91JYZ60WB) (A TYPE)	

5-4. MECHANICAL DECK ASSEMBLY (1)

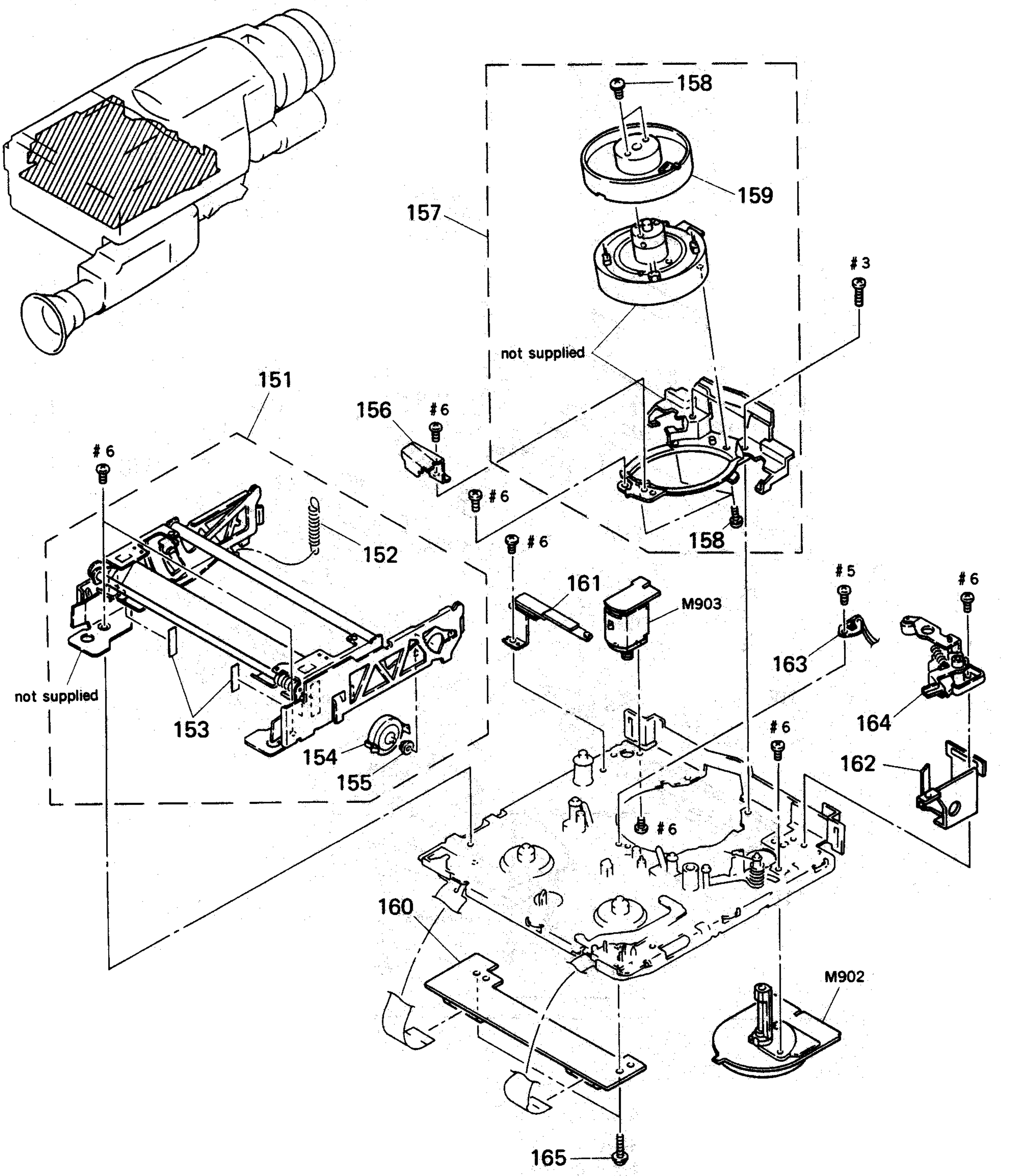

Ref. No.	Part No.	Description	Remark
151	X-3728-874-1	CASSETTE COMPARTMENT ASSY (N)	
152	3-728-825-03	SPRING, TENSION	
153	* 3-728-829-01	TAPE	
154	3-728-867-02	DAMPER, OIL	
155	3-728-829-02	GEAR, DAMPER	
156	3-728-868-01	GUARD, GUIDE	
157	A-7048-405-A	DRUM ASSY (DGU-64A-R)	
158	3-686-493-01	SCREW (M2X5), P1	
159	A-7049-343-A	DRUM ASSY, ROTARY (UPPER) (DGR-64-R)	

Ref. No.	Part No.	Description	Remark
160	* A-7071-380-A	CC-61 BOARD, COMPLETE	
161	X-3728-864-1	GROUND ASSY, SHAFT	
162	3-744-114-01	BASE (RP)	
163	1-808-505-12	SENSOR (DEW)	
164	A-7040-205-A	ROLLER BLOCK ASSY (RP), HC	
165	3-713-790-01	SCREW (M2X5), TAPPING, P3	
M902	8-835-331-01	MOTOR, DC U-22A (CAPSTAN)	
M903	A-7040-208-A	MOTOR ASSY, THREADING (LOADING)	

5-5. MECHANICAL DECK ASSEMBLY (2)

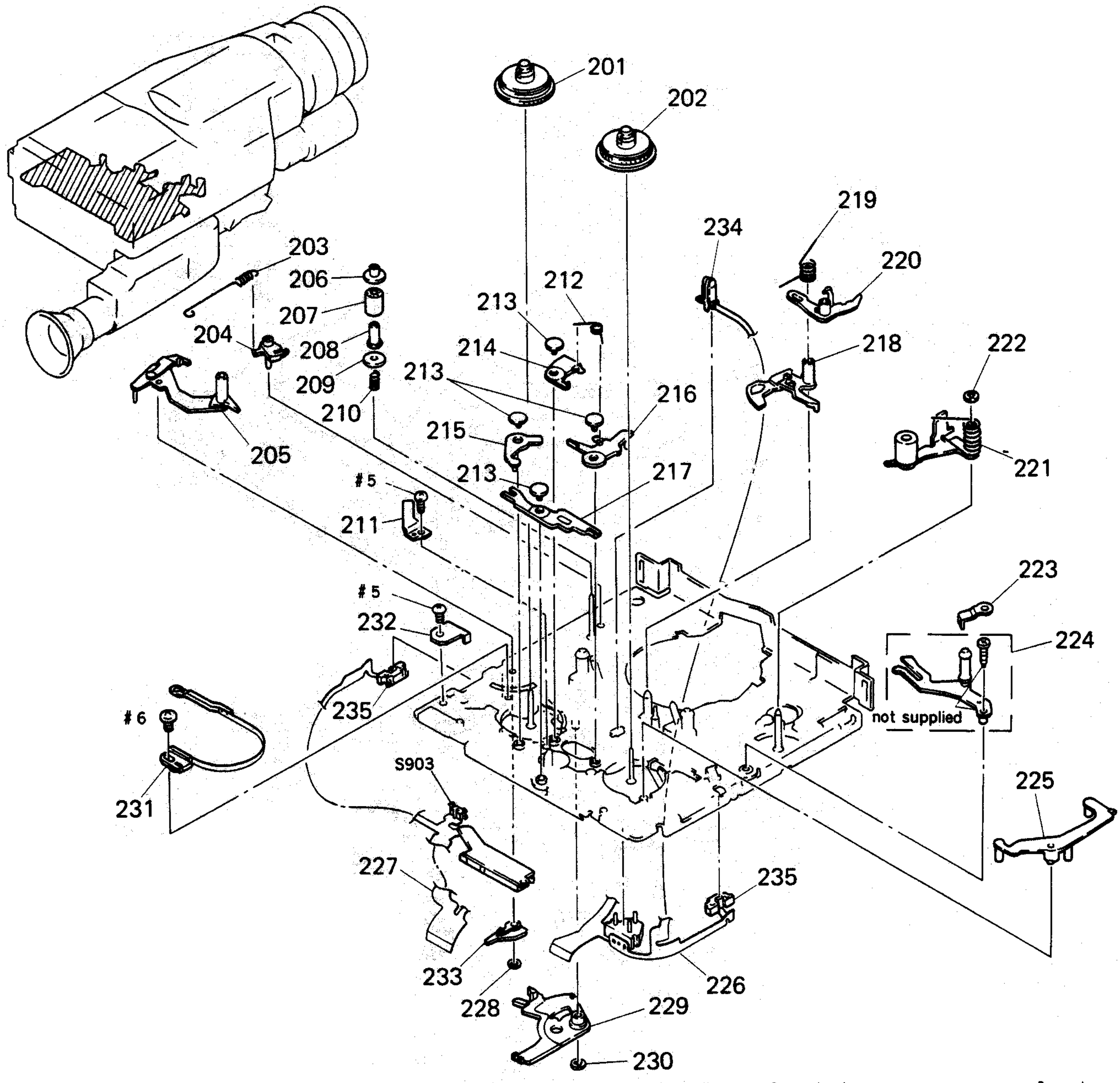

Ref. No.	Part No.	Description	Remark
201	X-3728-851-1	TABLE ASSY, REEL, S	
202	X-3728-855-1	TABLE ASSY, REEL, T	
203	3-736-414-01	SPRING, TENSION	
204	3-728-855-03	ARM, ADJUSTMENT	
205	X-3728-867-1	ARM ASSY (S), TENSION REGULATOR	
206	3-726-884-01	FLANGE, UPPER, TG2	
207	3-726-883-01	ROLLER, TG2	
208	3-726-885-01	SLEEVE, TG2	
209	3-726-882-02	FLANGE, LOWER, TG2	
210	3-726-886-01	SPRING, COMPRESSION	
211	3-726-848-01	RETAINER, TL	
212	3-726-866-01	SPRING (ST), TORSION	
213	3-726-858-01	PIN, SHAFT RETAINER	
214	3-728-849-01	BRAKE, S	
215	3-726-852-01	BRAKE, LB	
216	3-728-850-01	BRAKE, T	
217	3-726-853-01	LEVER, LB	
218	3-728-875-01	STOPPER, RK	
219	3-726-864-01	SPRING (RK), TORSION	
220	3-728-852-02	ARM, RK STOPPER	
221	A-7040-219-A	ARM BLOCK ASSY, PINCH	
222	3-669-465-00	WASHER (1.5), STOPPER	
223	3-728-808-01	SPRING, LEAF	
224	X-3728-869-1	ARM ASSY, TG7	
225	3-728-848-01	ARM, LB RELEASE	
226	1-628-061-12	FP-90 FLEXIBLE BOARD	
227	1-628-060-12	FP-89 FLEXIBLE BOARD	
228	3-321-393-11	WASHER, STOPPER	
229	X-3728-863-1	LEVER ASSY, SW	
230	3-726-829-01	WASHER, STOPPER	
231	X-3728-859-1	BAND ASSY, TENSION REGULATOR	
232	3-730-125-01	RETAINER, SW	
233	X-3728-857-1	STOPPER ASSY, TENSION REGULATOR	
234	3-728-837-01	HOLDER, LED	
235	3-728-869-02	HOLDER, SENSOR	
S903	1-571-099-11	SWITCH	

5-6. MECHANICAL DECK ASSEMBLY (3)

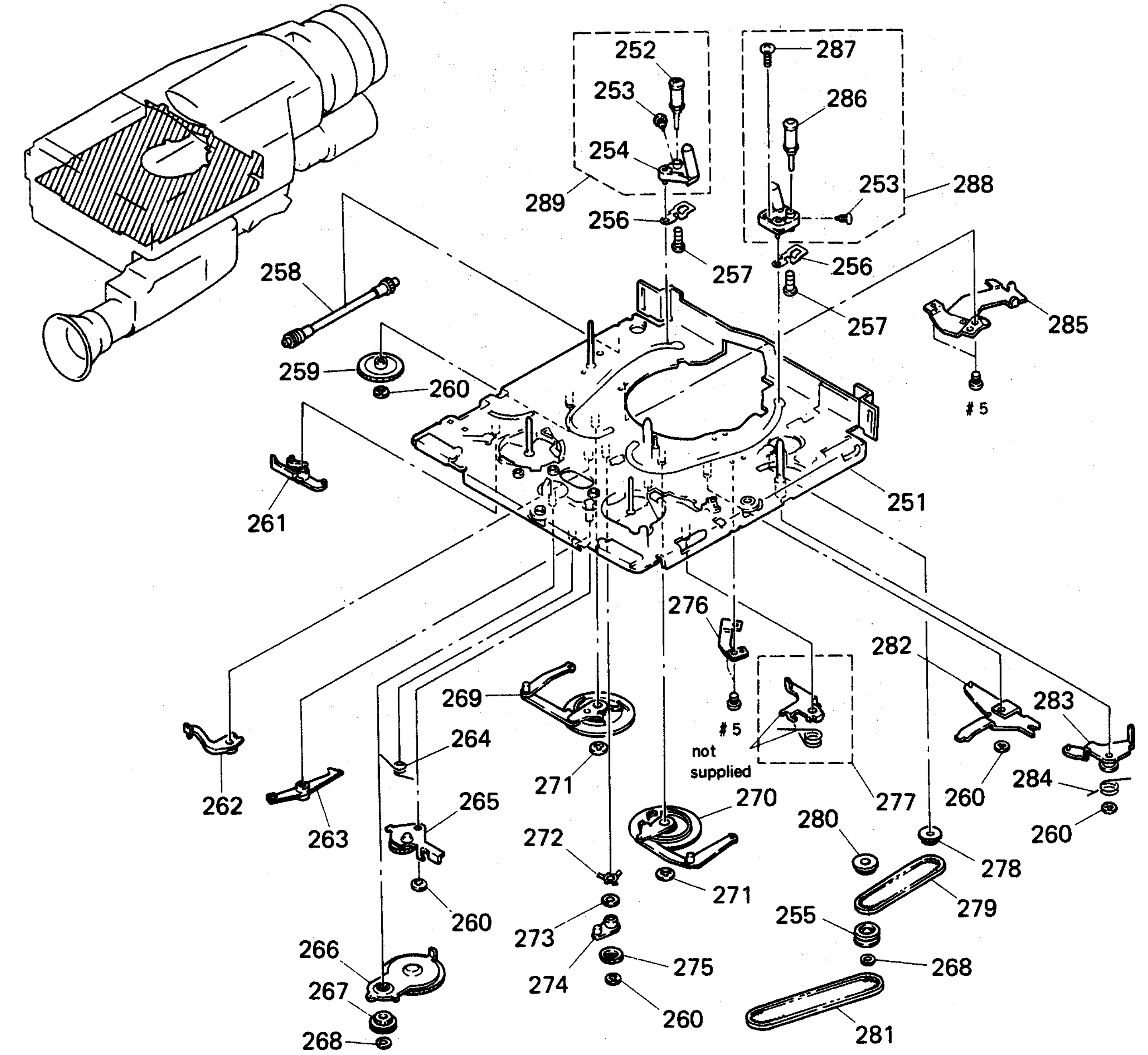

Ref. No.	Part No.	Description	Remark
251	X-3728-862-1	CHASSIS ASSY, MECHANICAL	
252	X-3726-820-1	ROLLER ASSY (U), GUIDE	
253	3-726-822-01	SCREW (M1.4X2) (STEP), HEAD	
254	X-3726-818-1	COASTER (LEFT) ASSY	
255	3-741-196-01	PULLEY (LOWER), BELT MIDWAY	
256	3-736-485-01	SPRING, LEAF, COSTER	
257	3-726-830-01	SCREW (M1.4X4) (THREE LOCK)	
258	X-3728-868-1	WORM ASSY	
259	3-744-109-01	GEAR, WHEEL	
260	3-726-829-01	WASHER, STOPPER	
261	3-728-842-01	LEVER, EJECT	
262	3-728-851-01	BRAKE, UL	
263	3-726-854-01	ARM, BRAKE RELEASE	
264	3-726-865-01	SPRING (LB), TORSION	
265	A-7040-225-A	GEAR BLOCK ASSY (N), LB	
266	X-3728-866-1	GEAR ASSY, RK	
267	X-3728-858-1	GEAR ASSY, RC	
268	3-321-393-11	WASHER, STOPPER	
269	X-3728-842-1	GEAR (LEFT) ASSY, DRIVE	
270	X-3728-843-1	GEAR (RIGHT) ASSY, DRIVE	
271	3-669-465-00	WASHER (1.5), STOPPER	
272	3-726-867-01	SPRING, LEAF	
273	3-701-436-21	WASHER, POLYEHTHYLENE	
274	3-726-857-03	ARM, UL	
275	3-726-856-04	GEAR, UL	
276	* 3-726-805-01	REINFORCEMENT (TT)	
277	X-3726-808-2	BRAKE ASSY, TS	
278	X-3726-805-1	GEAR ASSY, JOINT	
279	3-728-866-11	BELT (S), TIMING	
280	X-3726-813-1	PULLEY (UPPER) ASSY, MIDWAY	
281	3-741-197-01	BELT (L), TIMING	
282	X-3728-846-1	LEVER ASSY, THREADING	
283	X-3726-824-1	ARM ASSY, PINCH SUB	
284	3-726-895-01	SPRING	
285	X-3726-841-1	REINFORCEMENT (SS) ASSY	
286	X-3728-808-4	ROLLER ASSY (U) (PLATING), GUIDE	
287	3-736-473-01	SCREW (M2X0.25) (THREE LOCK)	
288	A-7040-217-A	COASTER (RIGHT) BLOCK ASSY (N1P)	
289	A-7040-128-A	COASTER (LEFT) BLOCK ASSY	

5-7. MAIN BOARD ASSEMBLY

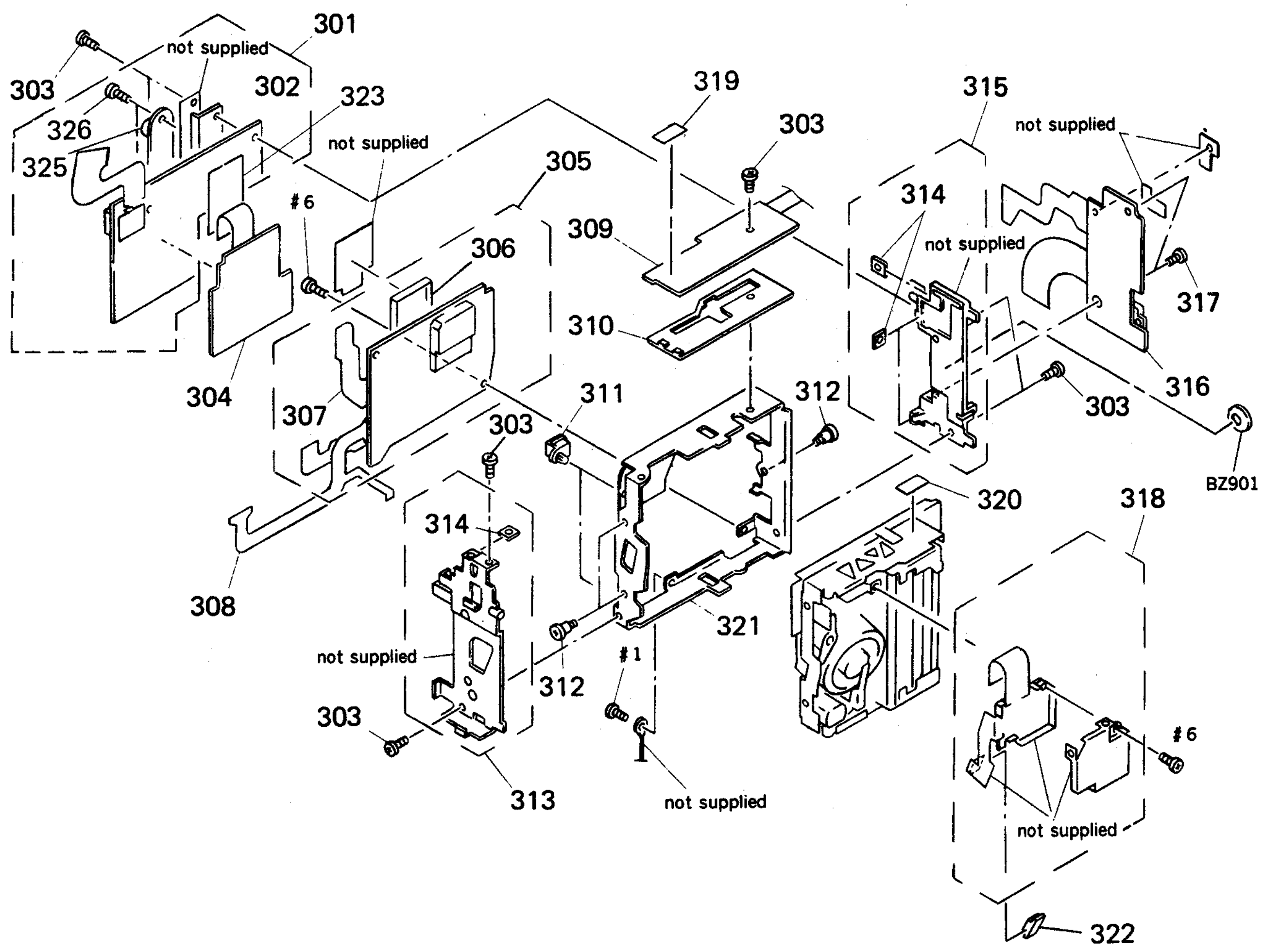

Ref. No.	Part No.	Description	Remark
301	* A-7062-749-A	VA-67 BOARD, COMPLETE (AEP/UK)	
	* A-7062-842-A	VA-67 BOARD, COMPLETE (E)	
302	X-3744-801-1	REINFORCEMENT ASSY, VA	
303	3-744-720-11	SCREW (M2X3)	
304	* A-7062-748-A	CT-38 BOARD, COMPLETE	
305	* A-7062-681-A	SS-136 BOARD, COMPLETE	
306	* X-3744-601-1	CASE ASSY (DD-B), SHIELD	
307	1-633-924-11	FP-248 FLEXIBLE BOARD	
308	1-633-922-11	FP-249 FLEXIBLE BOARD	
309	* A-7071-381-A	VK-14 BOARD, COMPLETE (AEP/UK)	
309	* A-7071-444-A	VK-14 BOARD, COMPLETE (E)	
310	X-3940-614-1	PLATE ASSY, BOTTOM, VTR	
311	3-744-609-01	HINGE (C), PC BOARD	
312	3-744-603-21	SCREW	
313	X-3744-805-1	HOLDER ASSY, MD	
314	3-718-233-01	NUT, PLATE	
315	X-3744-810-1	FRAME (R) ASSY, MD	
316	* A-7062-750-A	FU-100 BOARD, COMPLETE	
317	3-713-790-21	SCREW (M2X6), TAPPING, P3	
318	8-741-509-51	IC SBX1509-51 (HIC RP-77 BOARD, COMPLETE)	
319	* 3-744-948-01	SHEET, ELECTROSTATIC, VK	
320	* 3-730-176-11	SHEET, MD	
321	X-3744-602-1	FRAME ASSY, MD	
322	1-569-347-11	CONNECTOR, FPC (TRANSLATION) 13P	
323	* 3-744-890-01	PLATE, PROTECTION, FLEXIBLE	
325	1-537-142-21	TERMINAL BOARD	
326	3-719-695-01	SCREW (M1.7X3.5), SPECIAL HEAD	
BZ901	1-529-096-12	BUZZER, PIEZOELECTRIC	

5-8. CAMERA BLOCK ASSEMBLY

Note 1) For replacement of CCD imager, CD-65 board, complete and DT-77 board, complete read carefully the CAUTIONS FOR REPLACEMENT OF CCD IMAGER on page 93.

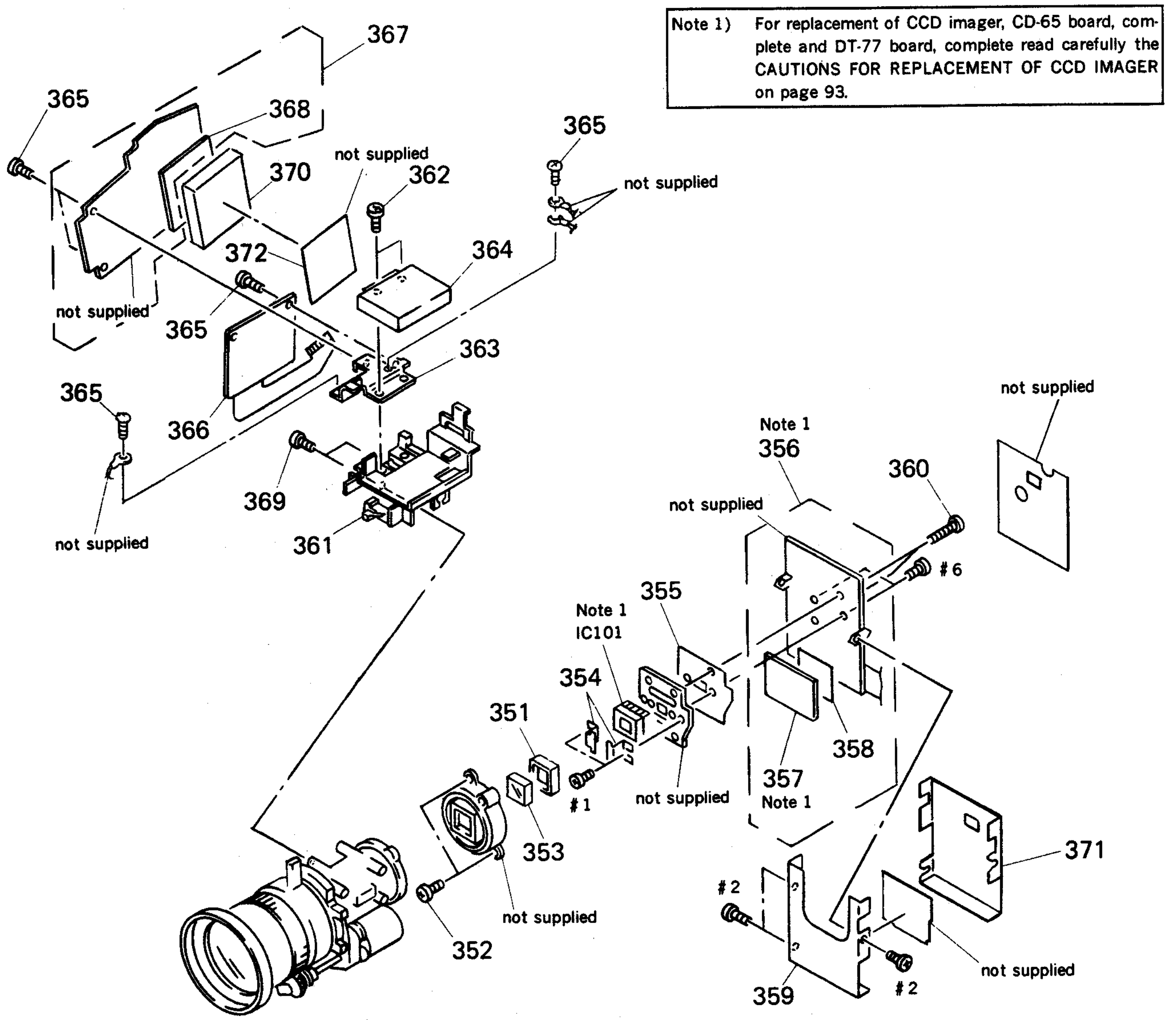

Note: The components identified by mark ⚠ or dotted line with mark ⚠ are critical for safety. Replace only with part number specified.

Ref. No.		Part No.	Description	Remark
351	*	3-725-177-01	RUBBER, SEAL	
352		3-738-519-11	SCREW (M2X3), +B	
353		1-547-381-12	FILTER BLOCK, OPTICAL	
354	*	3-725-175-01	STOPPER, CCD	
355	*	3-725-180-01	SHEET, INSULATING, CCD HOLDER	
356	*	A-7062-746-A	CD-65 BOARD, COMPLETE (Note 1)	
357		A-7068-173-A	HIC DT-77 BOARD, COMPLETE (HIC121) (Note 1)	
358	*	X-3739-811-1	PLATE ASSY, SHIELD, CD	
359	*	X-3744-702-1	CASE (MAIN) ASSY, SHIELD, C	
360		3-335-640-51	SCREW (M2X16)	
361	*	X-3744-808-1	HOLDER ASSY, LENS	

Ref. No.		Part No.	Description	Remark
362		3-713-790-21	SCREW (M2X6), TAPPING, P3	
363	*	3-744-818-01	PLATE, GROUND, CAMERA	
364	⚠	1-466-230-21	CONVERTER UNIT, D/D	
365		3-719-381-01	SCREW (M2X4)	
366	*	A-7062-747-A	AF-86 BOARD, COMPLETE	
367	*	A-7062-745-A	VC-99 BOARD, COMPLETE	
368		A-7068-186-A	HIC MX-10 BOARD, COMPLETE (HIC301)	
369		3-719-408-01	SCREW (B2), TAPPING, P3	
370	*	3-744-763-01	CASE, SHIELD, VC	
371		X-3744-763-1	LID, C SHIELD CASE	
372	*	3-744-892-01	INSULATOR, VC	
IC101		8-752-604-72	IC ICX039AN-2 (CCD IMAGER) (Note 1)	

5-9. ZOOM LENS ASSEMBLY (1) (VCL-8508XE)

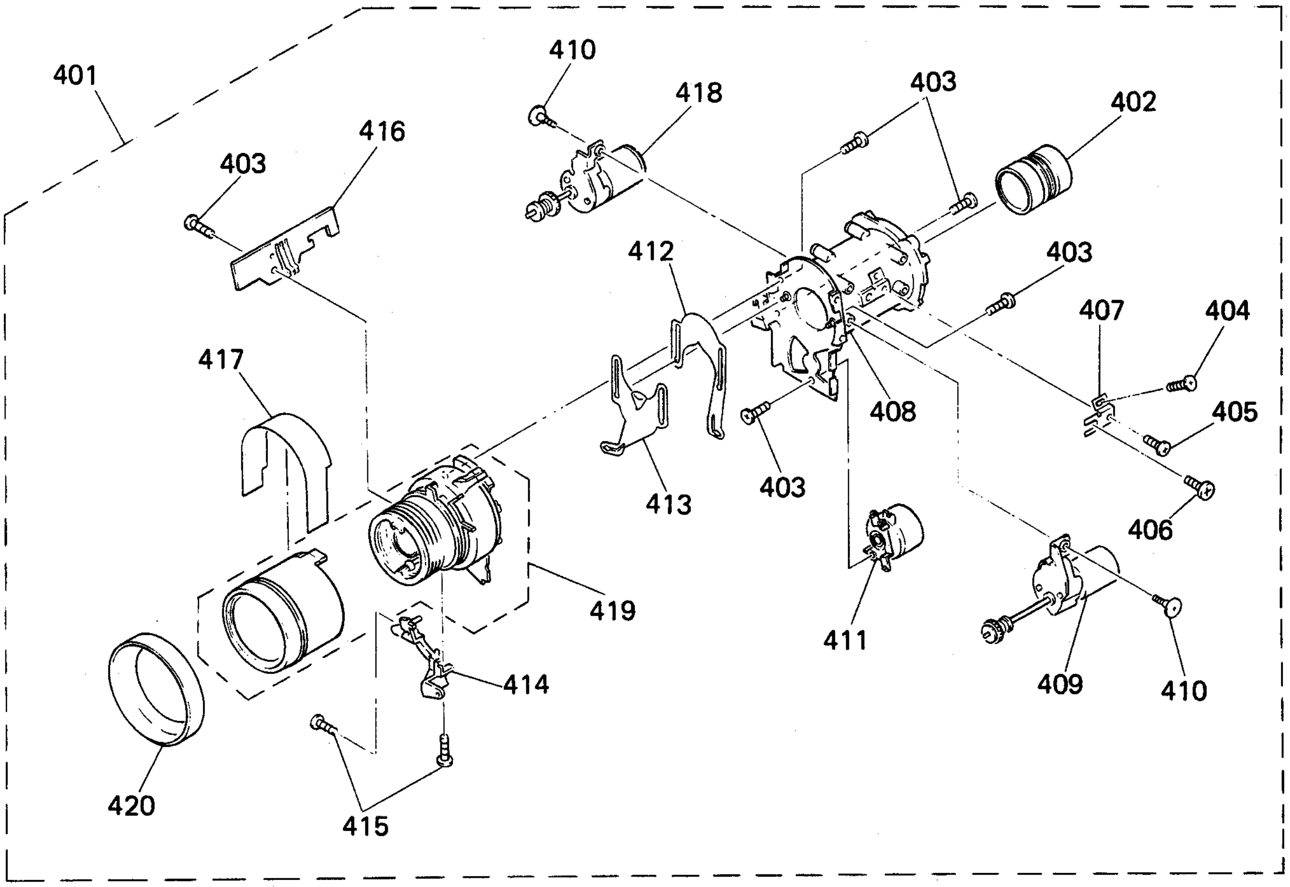

Ref. No.	Part No.	Description	Remark
401	1-547-422-11	LENS, ZOOM (VCL-8508XE)	
402	3-707-945-01	LENS ASSY, MASTER	
403	3-707-946-01	SCREW (M3X4.5)	
404	3-707-947-01	SCREW, MASTER LENS (M4X4)	
405	3-707-948-01	SCREW, TRACKING PLATE (M3.8X2.8)	
406	3-707-949-01	TOP	
407	3-707-950-01	PLATE, FIXED	
408	3-707-951-01	MIRROR TUBE, REAR	
409	3-707-952-01	MOTOR ASSY, AF	
410	3-707-953-01	SCREW, F.Z MOTOR (M6.3X6.1)	
411	3-707-954-01	METER ASSY, IRIS	
412	3-707-955-01	SHUTTLECOCK (A), IRIS	
413	3-707-956-01	SHUTTLECOCK (B), IRIS	
414	3-707-957-01	BRACKET	
415	3-707-958-01	SCREW, BRACKET (M3.5X5)	
416	3-707-959-01	CHASSIS, SENSOR	
417	3-707-961-01	SHEET, F	
418	3-707-962-01	MOTOR ASSY, PZ	
419	3-707-963-01	FZ ASSY	
420	3-744-839-01	RING, CHANGE	

5-10. ZOOM LENS ASSEMBLY (2) (VCL-8508XF)

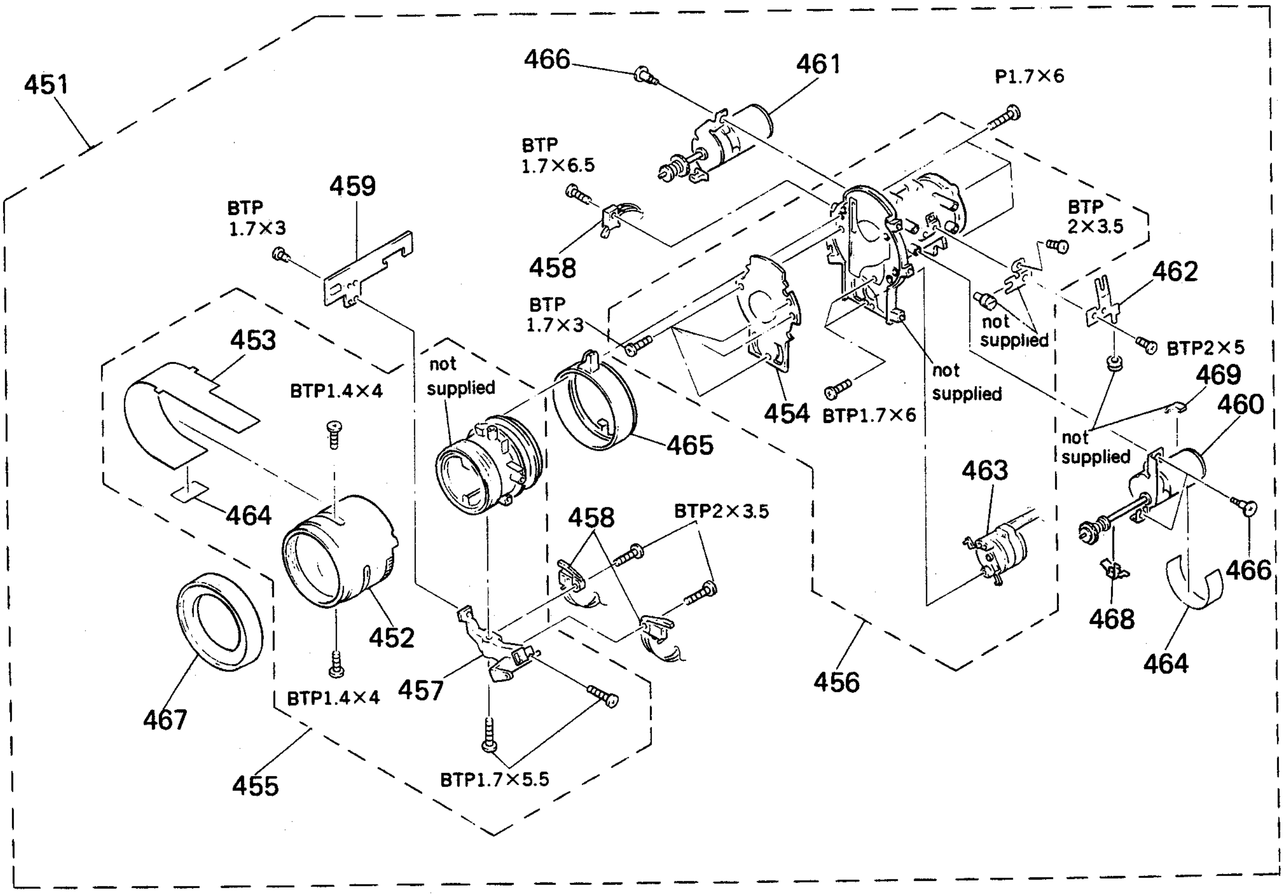

Ref. No.	Part No.	Description	Remark
451	1-547-412-15	LENS, ZOOM (VCL-8508XF)	
452	3-707-965-01	RING ASSY (F)	
453	3-707-966-01	SHEET, (F) METER	
454	3-707-967-01	FRAME ASSY, 4 GROUP LENS	
455	3-707-968-01	MIRROR TUBE ASSY	
456	3-707-969-01	MIRROR TUBE ASSY, REAR	
457	3-707-970-01	BLACKET	
458	3-707-971-01	SW ASSY (Z)	
459	3-707-972-01	BOARD ASSY, SENSOR	
460	3-708-059-01	MOTOR ASSY, AF (2)	
461	3-707-974-01	MOTOR ASSY, PZ	
462	3-707-975-01	RETAINER, (F) MOTOR	
463	3-707-976-01	METER ASSY, IRIS	
464	3-707-977-01	TAPE, POLYESTER	
465	3-707-978-01	RING ASSY, ZOOM	
466	3-707-796-01	SCREW, MOTOR SET	
467	3-744-839-01	RING, CHANGE	
468	3-708-087-01	SPRING, (F) SHAFT RETAINER	
469	3-708-058-01	RUBBER	

SECTION 6
ELECTRICAL PARTS LIST

NOTE:

- Due to standardization, replacements in the parts list may be different from the parts specified in the diagrams or the components used on the set.
- Items marked "*" are not stocked since they are seldom required for routine service. Some delay should be anticipated when ordering these items.
- -XX, -X mean standardized parts, so they may have some differences from the original one.
- CAPACITORS
  uF: μF
- RESISTORS
  All resistors are in ohms
  METAL: Metal-film resistor
  METAL OXIDE: Metal Oxide-film resistor
  F: nonflammable
- COILS
  uH: μH
- SEMICONDUCTORS
  In each case, u: μ, for example:
  uA...: μA..., uPA...: μPA...,
  uPB...: μPB..., uPC...: μPC...,
  uPD...: μPD....

The components identified by mark ⚠ or dotted line with mark ⚠ are critical for safety.
Replace only with part number specified.

When indicating parts by reference number, please include the board name.

Ref. No.	Part No.	Description			Remark
	* A-7062-747-A	AF-86 BOARD, COMPLETE			
		********************			
		(Ref. No 1,000 Series)			
		< CAPACITOR >			
C801	1-164-156-11	CERAMIC CHIP	0.1uF		25V
C802	1-162-974-11	CERAMIC CHIP	0.01uF		50V
C803	1-162-970-11	CERAMIC CHIP	0.01uF	10%	25V
C804	1-162-964-11	CERAMIC CHIP	0.001uF	10%	50V
C805	1-162-959-11	CERAMIC CHIP	330PF	5%	50V
C806	1-162-948-11	CERAMIC CHIP	39PF	5%	50V
C807	1-164-156-11	CERAMIC CHIP	0.1uF		25V
C808	1-162-959-11	CERAMIC CHIP	330PF	5%	50V
C809	1-162-948-11	CERAMIC CHIP	39PF	5%	50V
C810	1-164-218-11	CERAMIC CHIP	180PF	0.25PF	50V
C811	1-162-974-11	CERAMIC CHIP	0.01uF		50V
C812	1-164-218-11	CERAMIC CHIP	180PF	0.25PF	50V
C814	1-162-974-11	CERAMIC CHIP	0.01uF		50V
C815	1-135-180-21	TANTALUM CHIP	3.3uF	20%	6.3V
C816	1-163-059-00	CERAMIC CHIP	0.01uF	10%	50V
C817	1-163-059-00	CERAMIC CHIP	0.01uF	10%	50V
C818	1-135-091-00	TANTALUM CHIP	1uF	20%	16V
C820	1-164-156-11	CERAMIC CHIP	0.1uF		25V
C821	1-162-958-11	CERAMIC CHIP	270PF	5%	50V
C822	1-164-156-11	CERAMIC CHIP	0.1uF		25V
C823	1-162-948-11	CERAMIC CHIP	39PF	5%	50V
C824	1-162-956-11	CERAMIC CHIP	180PF	5%	50V
C825	1-162-950-11	CERAMIC CHIP	56PF	5%	50V
C826	1-162-958-11	CERAMIC CHIP	270PF	5%	50V
C827	1-162-947-11	CERAMIC CHIP	33PF	5%	50V
C828	1-162-957-11	CERAMIC CHIP	220PF	5%	50V
C829	1-162-953-11	CERAMIC CHIP	100PF	5%	50V
C830	1-164-156-11	CERAMIC CHIP	0.1uF		25V
C831	1-162-949-11	CERAMIC CHIP	47PF	5%	50V
C832	1-162-957-11	CERAMIC CHIP	220PF	5%	50V
C833	1-164-156-11	CERAMIC CHIP	0.1uF		25V
C834	1-162-966-11	CERAMIC CHIP	0.0022uF	10%	50V
C835	1-162-966-11	CERAMIC CHIP	0.0022uF	10%	50V
C836	1-162-966-11	CERAMIC CHIP	0.0022uF	10%	50V
C837	1-164-156-11	CERAMIC CHIP	0.1uF		25V
C838	1-163-038-00	CERAMIC CHIP	0.1uF		25V
C839	1-164-156-11	CERAMIC CHIP	0.1uF		25V
C840	1-164-634-11	CERAMIC CHIP	1uF		16V
C841	1-164-156-11	CERAMIC CHIP	0.1uF		25V
C842	1-164-156-11	CERAMIC CHIP	0.1uF		25V
C843	1-164-634-11	CERAMIC CHIP	1uF		16V
C844	1-164-634-11	CERAMIC CHIP	1uF		16V
C845	1-164-156-11	CERAMIC CHIP	0.1uF		25V
C846	1-164-156-11	CERAMIC CHIP	0.1uF		25V
C847	1-164-156-11	CERAMIC CHIP	0.1uF		25V
C848	1-164-156-11	CERAMIC CHIP	0.1uF		25V
C849	1-164-156-11	CERAMIC CHIP	0.1uF		25V
C850	1-164-156-11	CERAMIC CHIP	0.1uF		25V
C852	1-164-156-11	CERAMIC CHIP	0.1uF		25V
C853	1-164-156-11	CERAMIC CHIP	0.1uF		25V
C854	1-164-156-11	CERAMIC CHIP	0.1uF		25V
C855	1-135-180-21	TANTALUM CHIP	3.3uF	20%	6.3V
		< CONNECTOR >			
CN801	* 1-565-529-21	PIN, CONNECTOR (PC BOARD) 4P			
		< DIODE >			
D801	8-719-404-32	DIODE	MA141WA		
D802	8-719-404-46	DIODE	MA110		
D803	8-719-404-46	DIODE	MA110		
D804	8-719-404-46	DIODE	MA110		

AF-86

Ref. No.	Part No.	Description		Remark
		< IC >		
IC801	8-759-946-00	IC	MB88341PFV	
IC802	8-759-998-98	IC	LM358D	
IC803	8-759-100-93	IC	uPC393G2	
IC804	8-759-509-29	IC	XRU4011BF	
IC805	8-759-509-29	IC	XRU4011BF	
IC806	8-759-926-98	IC	SN74HC4040NS	
IC807	8-752-055-56	IC	CXA1516Q	
IC808	8-759-998-96	IC	LM324DR	
IC809	8-759-998-98	IC	LM358DR	
		< COIL >		
L801	1-412-052-21	INDUCTOR, CHIP	1uH	
L802	1-410-393-11	INDUCTOR, CHIP	100uH	
L803	1-410-656-11	INDUCTOR, CHIP	150uH	
L804	1-410-658-31	INDUCTOR, CHIP	220uH	
L805	1-410-655-31	INDUCTOR, CHIP	120uH	
L806	1-410-387-11	INDUCTOR, CHIP	33uH	
		< TRANSISTOR >		
Q801	8-729-402-45	TRANSISTOR	UN5212	
Q802	8-729-143-13	TRANSISTOR	2SC4176-B34	
Q803	8-729-905-35	TRANSISTOR	2SC4081-R	
Q804	8-729-905-23	TRANSISTOR	2SA1576-R	
Q805	8-729-143-13	TRANSISTOR	2SC4176-B34	
Q806	8-729-402-78	TRANSISTOR	XN6401	
Q807	8-729-905-35	TRANSISTOR	2SC4081-R	
Q808	8-729-905-35	TRANSISTOR	2SC4081-R	
Q809	8-729-905-35	TRANSISTOR	2SC4081-R	
Q810	8-729-905-35	TRANSISTOR	2SC4081-R	
Q811	8-729-905-35	TRANSISTOR	2SC4081-R	
Q812	8-729-420-44	TRANSISTOR	UN5210	
Q814	8-729-420-44	TRANSISTOR	UN5210	
Q815	8-729-420-44	TRANSISTOR	UN5210	

Ref. No.	Part No.	Description			Remark
		< RESISTOR >			
R801	1-216-833-11	METAL CHIP	10K	5%	1/16W
R802	1-218-298-11	METAL CHIP	2.2K	0.50%	1/16W
R803	1-218-313-11	METAL CHIP	560	0.50%	1/16W
R804	1-216-629-11	METAL CHIP	120	0.5%	1/10W
R805	1-216-651-11	METAL CHIP	1K	0.5%	1/10W
R806	1-218-298-11	METAL CHIP	2.2K	0.50%	1/16W
R807	1-216-820-11	METAL CHIP	820	5%	1/16W
R808	1-216-825-11	METAL CHIP	2.2K	5%	1/16W
R809	1-216-134-00	METAL CHIP	2.2	5%	1/8W
R810	1-216-835-11	METAL CHIP	15K	5%	1/16W
R811	1-216-825-11	METAL CHIP	2.2K	5%	1/16W
R812	1-216-853-11	METAL CHIP	470K	5%	1/16W
R813	1-216-821-11	METAL CHIP	1K	5%	1/16W
R814	1-216-832-11	METAL CHIP	8.2K	5%	1/16W
R815	1-216-835-11	METAL CHIP	15K	5%	1/16W
R816	1-216-821-11	METAL CHIP	1K	5%	1/16W
R817	1-216-832-11	METAL CHIP	8.2K	5%	1/16W
R818	1-216-825-11	METAL CHIP	2.2K	5%	1/16W
R819	1-216-853-11	METAL CHIP	470K	5%	1/16W
R820	1-216-832-11	METAL CHIP	8.2K	5%	1/16W
R821	1-216-679-11	METAL CHIP	15K	0.5%	1/10W
R822	1-216-675-11	METAL CHIP	10K	0.5%	1/10W
R825	1-216-679-11	METAL CHIP	15K	0.5%	1/10W
R826	1-216-675-11	METAL CHIP	10K	0.5%	1/10W
R827	1-216-675-11	METAL CHIP	10K	0.5%	1/10W
R828	1-216-809-11	METAL CHIP	100	5%	1/16W
R829	1-216-687-11	METAL CHIP	33K	0.5%	1/10W
R830	1-216-683-11	METAL CHIP	22K	0.5%	1/10W
R831	1-216-811-11	METAL CHIP	150	5%	1/16W
R832	1-216-821-11	METAL CHIP	1K	5%	1/16W
R833	1-216-817-11	METAL CHIP	470	5%	1/16W
R834	1-216-839-11	METAL CHIP	33K	5%	1/16W
R835	1-216-836-11	METAL CHIP	18K	5%	1/16W
R836	1-216-833-11	METAL CHIP	10K	5%	1/16W
R837	1-216-829-11	METAL CHIP	4.7K	5%	1/16W
R838	1-216-809-11	METAL CHIP	100	5%	1/16W
R839	1-216-825-11	METAL CHIP	2.2K	5%	1/16W
R840	1-216-821-11	METAL CHIP	1K	5%	1/16W
R841	1-216-833-11	METAL CHIP	10K	5%	1/16W
R842	1-216-829-11	METAL CHIP	4.7K	5%	1/16W
R843	1-216-821-11	METAL CHIP	1K	5%	1/16W
R844	1-216-822-11	METAL CHIP	1.2K	5%	1/16W
R845	1-216-817-11	METAL CHIP	470	5%	1/16W
R846	1-216-839-11	METAL CHIP	33K	5%	1/16W
R847	1-216-838-11	METAL CHIP	27K	5%	1/16W
R848	1-216-825-11	METAL CHIP	2.2K	5%	1/16W
R849	1-216-821-11	METAL CHIP	1K	5%	1/16W
R850	1-216-822-11	METAL CHIP	1.2K	5%	1/16W
R851	1-216-857-11	METAL CHIP	1M	5%	1/16W
R852	1-216-857-11	METAL CHIP	1M	5%	1/16W
R853	1-216-857-11	METAL CHIP	1M	5%	1/16W
R854	1-216-817-11	METAL CHIP	470	5%	1/16W
R855	1-216-838-11	METAL CHIP	27K	5%	1/16W
R856	1-216-846-11	METAL CHIP	120K	5%	1/16W
R857	1-216-839-11	METAL CHIP	33K	5%	1/16W
R858	1-216-838-11	METAL CHIP	27K	5%	1/16W
R859	1-216-838-11	METAL CHIP	27K	5%	1/16W
R860	1-216-679-11	METAL CHIP	15K	0.5%	1/10W
R863	1-216-817-11	METAL CHIP	470	5%	1/16W
R864	1-216-846-11	METAL CHIP	120K	5%	1/16W

Ref. No.	Part No.	Description			Remark
R865	1-216-839-11	METAL CHIP	33K	5%	1/16W
R866	1-216-846-11	METAL CHIP	120K	5%	1/16W
R867	1-216-839-11	METAL CHIP	33K	5%	1/16W
R871	1-216-817-11	METAL CHIP	470	5%	1/16W
R872	1-216-821-11	METAL CHIP	1K	5%	1/16W
R873	1-216-834-11	METAL CHIP	12K	5%	1/16W
R874	1-216-834-11	METAL CHIP	12K	5%	1/16W
R875	1-216-834-11	METAL CHIP	12K	5%	1/16W

< FLEXIBLE BOARD >

W801	1-638-477-11	FP-388 FLEXIBLE BOARD

****

* A-7071-380-A CC-61 BOARD, COMPLETE
****
(Ref. No 3,000 Series)

< CONNECTOR >

CN511	1-569-363-21	CONNECTOR, FPC 15P
CN512	1-566-529-11	CONNECTOR, FPC (ZIF) 13P
CN513	1-566-527-11	CONNECTOR, FPC (ZIF) 11P

****

* A-7062-746-A CD-65 BOARD, COMPLETE (Note 1)
****
(Ref. No 1,000 Series)

3-744-718-01 HOLDER (10), C

< CAPACITOR >

Ref. No.	Part No.	Description			Remark
C101	1-126-200-11	ELECT CHIP	10uF	20%	35V
C102	1-162-974-11	CERAMIC CHIP	0.01uF		50V
C104	1-128-013-11	ELECT CHIP	1uF	20%	50V
C105	1-126-607-11	ELECT CHIP	47uF	20%	4V
C107	1-162-964-11	CERAMIC CHIP	0.001uF	10%	50V
C110	1-126-206-11	ELECT CHIP	100uF	20%	6.3V
C111	1-162-915-11	CERAMIC CHIP	10PF	0.5PF	50V
C112	1-164-005-11	CERAMIC CHIP	0.47uF		25V
C113	1-128-013-11	ELECT CHIP	1uF	20%	50V
C114	1-128-008-11	ELECT CHIP	3.3uF	20%	35V
C115	1-162-970-11	CERAMIC CHIP	0.01uF	10%	25V
C121	1-162-970-11	CERAMIC CHIP	0.01uF	10%	25V
C122	1-162-964-11	CERAMIC CHIP	0.001uF	10%	50V
C123	1-135-091-00	TANTALUM CHIP	1uF	20%	16V
C124	1-162-970-11	CERAMIC CHIP	0.01uF	10%	25V
C125	1-126-205-11	ELECT CHIP	47uF	20%	6.3V
C126	1-164-156-11	CERAMIC CHIP	0.1uF		25V
C127	1-162-970-11	CERAMIC CHIP	0.01uF	10%	25V
C128	1-162-964-11	CERAMIC CHIP	0.001uF	10%	50V
C129	1-163-809-11	CERAMIC CHIP	0.047uF	10%	25V
C130	1-162-970-11	CERAMIC CHIP	0.01uF	10%	25V
C131	1-162-638-11	CERAMIC CHIP	1uF		16V
C135	1-162-638-11	CERAMIC CHIP	1uF		16V
C136	1-162-974-11	CERAMIC CHIP	0.01uF		50V
C137	1-162-919-11	CERAMIC CHIP	22PF	5%	50V
C138	1-162-962-11	CERAMIC CHIP	470PF	10%	50V
C140	1-162-964-11	CERAMIC CHIP	0.001uF	10%	50V
C141	1-162-942-11	CERAMIC CHIP	12PF	5%	50V
C142	1-135-145-11	TANTALUM CHIP	0.47uF	10%	25V
C144	1-164-156-11	CERAMIC CHIP	0.1uF		25V
C147	1-164-156-11	CERAMIC CHIP	0.1uF		25V
C148	1-164-005-11	CERAMIC CHIP	0.47uF		25V
C187	1-162-966-11	CERAMIC CHIP	0.0022uF	10%	50V
C188	1-162-966-11	CERAMIC CHIP	0.0022uF	10%	50V
C189	1-162-966-11	CERAMIC CHIP	0.0022uF	10%	50V
C190	1-162-953-11	CERAMIC CHIP	100PF	5%	50V
C191	1-135-181-21	TANTALUM CHIP	4.7uF	20%	6.3V
C192	1-126-100-11	ELECT	10uF	20%	6.3V

< CONNECTOR >

CN101	* 1-565-876-11	PIN, CONNECTOR (PC BOARD) 4P

< TRIMMER >

CT121	1-141-424-11	CAP, ADJ
CT122	1-141-356-11	CAP, ADJ

< DIODE >

D101	8-719-404-46	DIODE	MA110
D102	8-719-404-52	DIODE	MA143
D122	8-719-404-32	DIODE	MA141WA
D123	8-719-404-46	DIODE	MA110
D124	8-719-404-32	DIODE	MA141WA
D125	8-719-949-46	DIODE	1T32
D128	8-719-404-46	DIODE	MA110

< HIC >

HIC121	A-7068-173-A	HIC DT-77 BOARD, COMPLETE (Note 1)

< IC >

IC121	8-752-326-08	IC	CXD1159Q

< COIL >

L101	1-412-063-21	INDUCTOR, CHIP 68uH
L121	1-412-058-11	INDUCTOR, CHIP 10uH
L122	1-412-058-11	INDUCTOR, CHIP 10uH
L123	1-410-381-11	INDUCTOR, CHIP 10uH
L182	1-412-058-11	INDUCTOR, CHIP 10uH

Note 1) For replacement of CCD imager, CD-65 board, complete and DT-77 board, complete read carefully the CAUTIONS FOR REPLACEMENT OF CCD IMAGER on page 93.

Ref. No.	Part No.	Description				Remark
L183	1-412-052-21	INDUCTOR, CHIP 1uH				
L184	1-412-058-11	INDUCTOR, CHIP 10uH				
		< TRANSISTOR >				
Q101	8-765-420-02	TRANSISTOR	2SK300-3			
Q102	8-729-905-35	TRANSISTOR	2SC4081-R			
Q121	8-729-402-84	TRANSISTOR	XN4601			
Q122	8-729-402-78	TRANSISTOR	XN6401			
Q123	8-729-402-19	TRANSISTOR	XN6501			
Q125	8-729-905-35	TRANSISTOR	2SC4081-R			
Q126	8-729-402-84	TRANSISTOR	XN4601			
Q129	8-729-905-23	TRANSISTOR	2SA1576-R			
Q130	8-729-905-35	TRANSISTOR	2SC4081-R			
Q131	8-729-402-84	TRANSISTOR	XN4601			
Q132	8-729-402-84	TRANSISTOR	XN4601			
Q133	8-729-402-84	TRANSISTOR	XN4601			
Q135	8-729-402-84	TRANSISTOR	XN4601			
Q136	8-729-402-45	TRANSISTOR	UN5212			
		< RESISTOR >				
R101	1-216-845-11	METAL CHIP	100K	5%	1/16W	
R102	1-216-840-11	METAL CHIP	39K	5%	1/16W	
R103	1-216-820-11	METAL CHIP	820	5%	1/16W	
R104	1-216-809-11	METAL CHIP	100	5%	1/16W	
R105	1-216-827-11	METAL CHIP	3.3K	5%	1/16W	
R108	1-216-864-11	METAL CHIP	0			
R110	1-216-839-11	METAL CHIP	33K	5%	1/16W	
R111	1-216-839-11	METAL CHIP	33K	5%	1/16W	
R112	1-216-821-11	METAL CHIP	1K	5%	1/16W	
R113	1-216-864-11	METAL CHIP	0			
R114	1-216-845-11	METAL CHIP	100K	5%	1/16W	
R115	1-216-821-11	METAL CHIP	1K	5%	1/16W	
R116	1-216-821-11	METAL CHIP	1K	5%	1/16W	
R117	1-216-825-11	METAL CHIP	2.2K	5%	1/16W	
R118	1-216-813-11	METAL CHIP	220	5%	1/16W	
R119	1-216-821-11	METAL CHIP	1K	5%	1/16W	
R121	1-216-835-11	METAL CHIP	15K	5%	1/16W	
R122	1-216-857-11	METAL CHIP	1M	5%	1/16W	
R124	1-216-839-11	METAL CHIP	33K	5%	1/16W	
R125	1-216-845-11	METAL CHIP	100K	5%	1/16W	
R126	1-216-837-11	METAL CHIP	22K	5%	1/16W	
R127	1-216-820-11	METAL CHIP	820	5%	1/16W	
R128	1-216-843-11	METAL CHIP	68K	5%	1/16W	
R129	1-216-833-11	METAL CHIP	10K	5%	1/16W	
R130	1-216-835-11	METAL CHIP	15K	5%	1/16W	
R131	1-216-844-11	METAL CHIP	82K	5%	1/16W	
R132	1-216-844-11	METAL CHIP	82K	5%	1/16W	
R133	1-216-850-11	METAL CHIP	270K	5%	1/16W	
R136	1-216-833-11	METAL CHIP	10K	5%	1/16W	
R138	1-216-836-11	METAL CHIP	18K	5%	1/16W	
R139	1-216-837-11	METAL CHIP	22K	5%	1/16W	
R140	1-216-837-11	METAL CHIP	22K	5%	1/16W	
R141	1-216-841-11	METAL CHIP	47K	5%	1/16W	
R142	1-216-837-11	METAL CHIP	22K	5%	1/16W	
R143	1-216-845-11	METAL CHIP	100K	5%	1/16W	
R148	1-216-849-11	METAL CHIP	220K	5%	1/16W	
R149	1-216-864-11	METAL CHIP	0			
R154	1-216-864-11	METAL CHIP	0			
R155	1-216-864-11	METAL CHIP	0			
R156	1-216-809-11	METAL CHIP	100	5%	1/16W	
R157	1-216-843-11	METAL CHIP	68K	5%	1/16W	
R158	1-216-862-11	METAL GLAZE	2.7M	5%	1/16W	
R159	1-216-809-11	METAL CHIP	100	5%	1/16W	
R160	1-216-833-11	METAL CHIP	10K	5%	1/16W	
R161	1-216-809-11	METAL CHIP	100	5%	1/16W	
R162	1-216-825-11	METAL CHIP	2.2K	5%	1/16W	
R163	1-216-845-11	METAL CHIP	100K	5%	1/16W	
R164	1-216-825-11	METAL CHIP	2.2K	5%	1/16W	
R165	1-216-837-11	METAL CHIP	22K	5%	1/16W	
R166	1-216-836-11	METAL CHIP	18K	5%	1/16W	
R167	1-216-822-11	METAL CHIP	1.2K	5%	1/16W	
R168	1-216-821-11	METAL CHIP	1K	5%	1/16W	
R169	1-216-864-11	METAL CHIP	0			
R171	1-216-821-11	METAL CHIP	1K	5%	1/16W	
R173	1-216-813-11	METAL CHIP	220	5%	1/16W	
R181	1-216-821-11	METAL CHIP	1K	5%	1/16W	
R182	1-216-829-11	METAL CHIP	4.7K	5%	1/16W	
R183	1-216-821-11	METAL CHIP	1K	5%	1/16W	
R184	1-216-835-11	METAL CHIP	15K	5%	1/16W	
R185	1-216-821-11	METAL CHIP	1K	5%	1/16W	
R186	1-216-821-11	METAL CHIP	1K	5%	1/16W	
R187	1-216-821-11	METAL CHIP	1K	5%	1/16W	
R188	1-216-821-11	METAL CHIP	1K	5%	1/16W	
R189	1-216-821-11	METAL CHIP	1K	5%	1/16W	
R190	1-216-821-11	METAL CHIP	1K	5%	1/16W	
R191	1-216-821-11	METAL CHIP	1K	5%	1/16W	
R192	1-216-821-11	METAL CHIP	1K	5%	1/16W	
R193	1-216-821-11	METAL CHIP	1K	5%	1/16W	
R194	1-216-821-11	METAL CHIP	1K	5%	1/16W	
R195	1-216-821-11	METAL CHIP	1K	5%	1/16W	
R196	1-216-813-11	METAL CHIP	220	5%	1/16W	
R197	1-216-821-11	METAL CHIP	1K	5%	1/16W	
R198	1-216-821-11	METAL CHIP	1K	5%	1/16W	
R199	1-216-821-11	METAL CHIP	1K	5%	1/16W	
R200	1-216-844-11	METAL CHIP	82K	5%	1/16W	
R201	1-216-671-11	METAL CHIP	6.8K	0.5%	1/10W	
R202	1-216-643-11	METAL CHIP	470	0.5%	1/10W	
R203	1-216-681-11	METAL CHIP	18K	0.5%	1/10W	

Ref. No.	Part No.	Description				Remark
R204	1-216-671-11	METAL CHIP	6.8K	0.5%	1/10W	
R205	1-216-659-11	METAL CHIP	2.2K	0.5%	1/10W	
R206	1-216-681-11	METAL CHIP	18K	0.5%	1/10W	
R207	1-216-841-11	METAL CHIP	47K	5%	1/16W	
R208	1-216-825-11	METAL CHIP	2.2K	5%	1/16W	
R209	1-216-825-11	METAL CHIP	2.2K	5%	1/16W	
R210	1-216-833-11	METAL CHIP	10K	5%	1/16W	
R215	1-216-842-11	METAL CHIP	56K	5%	1/16W	
R216	1-216-833-11	METAL CHIP	10K	5%	1/16W	
R217	1-216-833-11	METAL CHIP	10K	5%	1/16W	
R220	1-216-835-11	METAL CHIP	15K	5%	1/16W	
R221	1-216-840-11	METAL CHIP	39K	5%	1/16W	
R222	1-216-833-11	METAL CHIP	10K	5%	1/16W	
R226	1-216-864-11	METAL CHIP	0			
R229	1-216-864-11	METAL CHIP	0			
R230	1-216-833-11	METAL CHIP	10K	5%	1/16W	
R231	1-216-813-11	METAL CHIP	220	5%	1/16W	
R232	1-216-813-11	METAL CHIP	220	5%	1/16W	
R233	1-216-841-11	METAL CHIP	47K	5%	1/16W	
R234	1-216-841-11	METAL CHIP	47K	5%	1/16W	

< FLEXIBLE BOARD >

W102	1-633-975-11	FP-268 FLEXIBLE BOARD

< CRYSTAL >

X121	1-579-076-11	VIBRATOR, CRYSTAL (28.375MHz)
X122	1-567-733-11	VIBRATOR, CRYSTAL (17MHz)

****

* A-7071-413-A CK-ZK BOARD, COMPLETE
****
(Including the CK-50 and ZK-14 boards)

1-633-985-11 FP-298 FLEXIBLE BOARD

CK-50 BOARD (Ref. No 5,000 Series)
****

* 3-744-909-01 HOLDER (CK), LCD

< CAPACITOR >

C670	1-163-038-00	CERAMIC CHIP	0.1uF	25V

< CONNECTOR >

CN670	1-565-874-11	PIN, CONNECTOR (PC BOARD) 2P

< DIODE >

Ref. No.	Part No.	Description	Remark
D671	8-719-404-46	DIODE MA110	
D672	8-719-404-46	DIODE MA110	

< IC >

IC670	8-759-634-72	IC M34206M2-109FP

< DISPLAY PANEL >

ND670	1-809-022-11	DISPLAY PANEL, LIQUID CRYSTAL

< RESISTOR >

R670	1-216-121-00	METAL CHIP	1M	5%	1/10W
R671	1-216-295-00	METAL CHIP	0	5%	1/10W
R672	1-216-097-00	METAL CHIP	100K	5%	1/10W
R675	1-216-296-00	METAL CHIP	0	5%	1/8W

< SWITCH >

S670	1-570-870-11	SWITCH, SLIDE (AUTO LOCK)
S671	1-571-787-11	SWITCH, TACTILE (SHUTTER SPEED)
S672	1-571-787-11	SWITCH, TACTILE (PROGRAM AE)
S673	1-571-787-11	SWITCH, TACTILE (FOCUS)
S674	1-571-787-11	SWITCH, TACTILE (PUSH AUTO)
S675	1-571-787-11	SWITCH, TACTILE (BACK LIGHT)
S676	1-571-787-11	SWITCH, TACTILE (WHT BAL)

< CRYSTAL >

X670	1-567-152-00	VIBRATOR, CERAMIC (4MHz)

ZK-14 BOARD (Ref. No 5,000 Series)
****

< SWITCH >

S680	1-571-684-11	SWITCH, TACTIL (MACRO AF)
S681	1-571-684-11	SWITCH, TACTIL (FADER

****

* A-7062-748-A CT-38 BOARD, COMPLETE
****
(Ref. No 2,000 Series)

< CAPACITOR >

C700	1-162-974-11	CERAMIC CHIP	0.01uF		50V
C701	1-162-974-11	CERAMIC CHIP	0.01uF		50V
C702	1-128-020-11	ELECT CHIP	10uF	0	6.3V
C703	1-163-038-00	CERAMIC CHIP	0.1uF		25V
C704	1-162-974-11	CERAMIC CHIP	0.01uF		50V
C706	1-135-177-21	TANTALUM CHIP	1uF	20%	20V
C708	1-162-915-11	CERAMIC CHIP	10PF	0.5PF	50V
C709	1-163-038-00	CERAMIC CHIP	0.1uF		25V
C710	1-128-020-11	ELECT CHIP	10uF	0	6.3V

CT-38

Ref. No.	Part No.	Description			Remark
C711	1-163-038-00	CERAMIC CHIP	0.1uF		25V
C717	1-128-015-11	ELECT CHIP	22uF	0	4V
C718	1-128-015-11	ELECT CHIP	22uF	0	4V
C720	1-162-974-11	CERAMIC CHIP	0.01uF		50V
C721	1-135-157-21	TANTALUM CHIP	10uF	20%	6.3V
C723	1-162-974-11	CERAMIC CHIP	0.01uF		50V
C724	1-162-974-11	CERAMIC CHIP	0.01uF		50V
C726	1-162-974-11	CERAMIC CHIP	0.01uF		50V
C727	1-162-974-11	CERAMIC CHIP	0.01uF		50V
C728	1-128-020-11	ELECT CHIP	10uF	0	6.3V
C729	1-162-974-11	CERAMIC CHIP	0.01uF		50V
C730	1-162-974-11	CERAMIC CHIP	0.01uF		50V
C734	1-135-157-21	TANTALUM CHIP	10uF	20%	6.3V
C735	1-164-156-11	CERAMIC CHIP	0.1uF		25V
C736	1-162-638-11	CERAMIC CHIP	1uF		16V
C737	1-164-156-11	CERAMIC CHIP	0.1uF		25V
C738	1-164-156-11	CERAMIC CHIP	0.1uF		25V
C739	1-164-156-11	CERAMIC CHIP	0.1uF		25V
C740	1-164-156-11	CERAMIC CHIP	0.1uF		25V
C741	1-162-917-11	CERAMIC CHIP	15PF	5%	50V
C742	1-162-974-11	CERAMIC CHIP	0.01uF		50V
C743	1-164-156-11	CERAMIC CHIP	0.1uF		25V
C744	1-162-974-11	CERAMIC CHIP	0.01uF		50V
C745	1-162-974-11	CERAMIC CHIP	0.01uF		50V
C746	1-164-227-11	CERAMIC CHIP	0.022uF	10%	25V
C747	1-164-227-11	CERAMIC CHIP	0.022uF	10%	25V
C748	1-162-974-11	CERAMIC CHIP	0.01uF		50V
C749	1-135-145-11	TANTALUM CHIP	0.47uF	10%	25V
C750	1-162-923-11	CERAMIC CHIP	47PF	5%	50V
C751	1-135-179-21	TANTAL. CHIP	2.2uF	20%	16V
C752	1-162-970-11	CERAMIC CHIP	0.01uF	10%	25V
C753	1-162-915-11	CERAMIC CHIP	10PF	0.5PF	50V
C754	1-162-958-11	CERAMIC CHIP	270PF	5%	50V
C755	1-162-958-11	CERAMIC CHIP	270PF	5%	50V
C756	1-162-638-11	CERAMIC CHIP	1uF		16V
C757	1-163-038-00	CERAMIC CHIP	0.1uF		25V
C758	1-162-974-11	CERAMIC CHIP	0.01uF		50V
C759	1-162-974-11	CERAMIC CHIP	0.01uF		50V
C760	1-162-916-11	CERAMIC CHIP	12PF	5%	50V
C761	1-162-919-11	CERAMIC CHIP	22PF	5%	50V
C763	1-162-927-11	CERAMIC CHIP	100PF	5%	50V
C769	1-128-049-11	ELECT CHIP	1uF	0	50V
C770	1-126-153-11	ELECT	22uF	20%	6.3V
C773	1-163-809-11	CERAMIC CHIP	0.047uF	10%	25V
C774	1-162-965-11	CERAMIC CHIP	0.0015uF	10%	50V
C799	1-135-178-11	TANTAL. CHIP	1.5uF	20%	20V
C901	1-162-974-11	CERAMIC CHIP	0.01uF		50V
C902	1-135-157-21	TANTALUM CHIP	10uF	20%	6.3V
C903	1-162-947-11	CERAMIC CHIP	33PF	5%	50V

Ref. No.	Part No.	Descr			Remark
C904	1-162-962-11	CERAMIC CHIP	470PF	10%	50V
C905	1-162-997-11	CERAMIC CHIP	10PF	0.5PF	50V
C906	1-163-123-00	CERAMIC CHIP	180PF	5%	50V
C907	1-162-964-11	CERAMIC CHIP	0.001uF	10%	50V
C908	1-162-964-11	CERAMIC CHIP	0.001uF	10%	50V
C909	1-162-970-11	CERAMIC CHIP	0.01uF	10%	25V
C910	1-164-156-11	CERAMIC CHIP	0.1uF		25V
C911	1-162-974-11	CERAMIC CHIP	0.01uF		50V
C930	1-162-974-11	CERAMIC CHIP	0.01uF		50V
C931	1-135-178-11	TANTAL. CHIP	1.5uF	20%	20V
		< CONNECTOR >			
CN705	1-568-336-11	CONNECTOR, BOARD TO BOARD 20P			
		< TRIMMER >			
CT701	1-141-331-11	CAP, CHIP TRIMMER			
CT702	1-141-331-11	CAP, CHIP TRIMMER			
CT901	1-141-331-11	CAP, CHIP TRIMMER			
CT902	1-141-417-11	CAP, ADJ			
		< DIODE >			
D901	8-719-949-46	DIODE 1T32			
D903	8-719-404-46	DIODE MA110			
D904	8-719-404-46	DIODE MA110			
D905	8-719-404-46	DIODE MA110			
D906	8-719-404-46	DIODE MA110			
		< IC >			
IC701	8-759-998-30	IC CF79028PG			
IC702	8-759-979-96	IC MB8464A-15LLPF			
IC703	8-752-039-49	IC CXA1393AN			
IC704	8-759-634-47	IC M51285BGP			
IC707	8-759-710-29	IC NJM2235M			
IC708	8-759-710-09	IC NJM2233AM			
IC709	8-759-710-09	IC NJM2233AM			
IC713	8-759-234-20	IC TC7S08F			
IC901	8-759-970-80	IC MB673198U			
IC902	8-759-153-41	IC uPD6451AGT-611-E1			
		< COIL >			
L700	1-412-028-11	INDUCTOR, CHIP 4.7uH			
L701	1-410-384-31	INDUCTOR, CHIP 18uH			
L702	1-412-028-11	INDUCTOR, CHIP 4.7uH			
L703	1-412-028-11	INDUCTOR, CHIP 4.7uH			
L704	1-412-032-11	INDUCTOR, CHIP 100uH			
L901	1-412-032-11	INDUCTOR, CHIP 100uH			
L902	1-412-143-11	INDUCTOR 39uH			
L903	1-412-282-41	INDUCTOR 470uH			

Ref. No.	Part No.	Description				Remark
		< TRANSISTOR >				
Q701	8-729-925-91	TRANSISTOR	DTC115EU			
Q702	8-729-907-03	TRANSISTOR	FMG5			
Q703	8-729-905-18	TRANSISTOR	DTC144EU			
Q704	8-729-905-35	TRANSISTOR	2SC4081-R			
Q705	8-729-905-24	TRANSISTOR	2SA1576-S			
Q706	8-729-905-18	TRANSISTOR	DTC144EU			
Q707	8-729-905-35	TRANSISTOR	2SC4081-R			
Q708	8-729-905-15	TRANSISTOR	DTC144WU			
Q709	8-729-402-32	TRANSISTOR	2SD1819A-R			
Q709	8-729-905-35	TRANSISTOR	2SC4081-R			
Q710	8-729-905-35	TRANSISTOR	2SC4081-R			
Q720	8-729-905-18	TRANSISTOR	DTC144EU			
Q726	8-729-905-23	TRANSISTOR	2SA1576-R			
Q727	8-729-905-35	TRANSISTOR	2SC4081-R			
Q728	8-729-905-35	TRANSISTOR	2SC4081-R			
Q729	8-729-905-18	TRANSISTOR	DTC144EU			
Q730	8-729-905-12	TRANSISTOR	DTA144EU			
Q800	8-729-905-18	TRANSISTOR	DTC144EU			
Q801	8-729-905-23	TRANSISTOR	2SA1576-R			
		< RESISTOR >				
R700	1-216-833-11	METAL CHIP	10K	5%	1/16W	
R702	1-216-833-11	METAL CHIP	10K	5%	1/16W	
R704	1-216-833-11	METAL CHIP	10K	5%	1/16W	
R706	1-216-833-11	METAL CHIP	10K	5%	1/16W	
R708	1-216-833-11	METAL CHIP	10K	5%	1/16W	
R711	1-216-833-11	METAL CHIP	10K	5%	1/16W	
R713	1-216-833-11	METAL CHIP	10K	5%	1/16W	
R715	1-216-823-11	METAL CHIP	1.5K	5%	1/16W	
R716	1-216-829-11	METAL CHIP	4.7K	5%	1/16W	
R717	1-216-826-11	METAL CHIP	2.7K	5%	1/16W	
R720	1-216-864-11	METAL CHIP	0			
R722	1-216-817-11	METAL CHIP	470	5%	1/16W	
R723	1-216-295-00	METAL CHIP	0	5%	1/10W	
R724	1-216-845-11	METAL CHIP	100K	5%	1/16W	
R725	1-216-833-11	METAL CHIP	10K	5%	1/16W	
R729	1-216-864-11	METAL CHIP	0			
R731	1-216-847-11	METAL CHIP	150K	5%	1/16W	
R732	1-216-847-11	METAL CHIP	150K	5%	1/16W	
R734	1-216-821-11	METAL CHIP	1K	5%	1/16W	
R735	1-216-821-11	METAL CHIP	1K	5%	1/16W	
R736	1-216-821-11	METAL CHIP	1K	5%	1/16W	
R737	1-216-841-11	METAL CHIP	47K	5%	1/16W	
R739	1-216-295-00	METAL CHIP	0	5%	1/10W	
R741	1-216-833-11	METAL CHIP	10K	5%	1/16W	
R742	1-216-833-11	METAL CHIP	10K	5%	1/16W	
R745	1-216-845-11	METAL CHIP	100K	5%	1/16W	

Ref. No.	Part No.	Description				Remark
R747	1-216-829-11	METAL CHIP	4.7K	5%	1/16W	
R748	1-216-829-11	METAL CHIP	4.7K	5%	1/16W	
R749	1-216-837-11	METAL CHIP	22K	5%	1/16W	
R750	1-216-838-11	METAL CHIP	27K	5%	1/16W	
R751	1-216-825-11	METAL CHIP	2.2K	5%	1/16W	
R753	1-216-825-11	METAL CHIP	2.2K	5%	1/16W	
R754	1-216-825-11	METAL CHIP	2.2K	5%	1/16W	
R755	1-216-829-11	METAL CHIP	4.7K	5%	1/16W	
R757	1-216-833-11	METAL CHIP	10K	5%	1/16W	
R758	1-216-823-11	METAL CHIP	1.5K	5%	1/16W	
R759	1-216-806-11	METAL GLAZE	56	5%	1/16W	
R760	1-216-821-11	METAL CHIP	1K	5%	1/16W	
R761	1-216-814-11	METAL CHIP	270	5%	1/16W	
R762	1-216-845-11	METAL CHIP	100K	5%	1/16W	
R763	1-216-843-11	METAL CHIP	68K	5%	1/16W	
R764	1-216-832-11	METAL CHIP	8.2K	5%	1/16W	
R766	1-216-857-11	METAL CHIP	1M	5%	1/16W	
R770	1-216-864-11	METAL CHIP	0			
R772	1-216-864-11	METAL CHIP	0			
R776	1-216-815-11	METAL CHIP	330	5%	1/16W	
R777	1-216-823-11	METAL CHIP	1.5K	5%	1/16W	
R780	1-216-829-11	METAL CHIP	4.7K	5%	1/16W	
R781	1-216-836-11	METAL CHIP	18K	5%	1/16W	
R782	1-216-828-11	METAL CHIP	3.9K	5%	1/16W	
R783	1-216-832-11	METAL CHIP	8.2K	5%	1/16W	
R784	1-216-821-11	METAL CHIP	1K	5%	1/16W	
R787	1-216-822-11	METAL CHIP	1.2K	5%	1/16W	
R788	1-216-822-11	METAL CHIP	1.2K	5%	1/16W	
R789	1-216-829-11	METAL CHIP	4.7K	5%	1/16W	
R793	1-216-831-11	METAL CHIP	6.8K	5%	1/16W	
R795	1-216-864-11	METAL CHIP	0			
R796	1-216-827-11	METAL CHIP	3.3K	5%	1/16W	
R797	1-216-833-11	METAL CHIP	10K	5%	1/16W	
R798	1-216-829-11	METAL CHIP	4.7K	5%	1/16W	
R901	1-216-864-11	METAL CHIP	0			
R902	1-216-864-11	METAL CHIP	0			
R903	1-216-864-11	METAL CHIP	0			
R904	1-216-825-11	METAL CHIP	2.2K	5%	1/16W	
R905	1-216-845-11	METAL CHIP	100K	5%	1/16W	
R906	1-216-845-11	METAL CHIP	100K	5%	1/16W	
R907	1-216-839-11	METAL CHIP	33K	5%	1/16W	
R908	1-216-845-11	METAL CHIP	100K	5%	1/16W	
R909	1-216-833-11	METAL CHIP	10K	5%	1/16W	
R911	1-216-838-11	METAL CHIP	27K	5%	1/16W	
R912	1-216-864-11	METAL CHIP	0			
R913	1-216-829-11	METAL CHIP	4.7K	5%	1/16W	
R914	1-216-833-11	METAL CHIP	10K	5%	1/16W	
R915	1-216-830-11	METAL CHIP	5.6K	5%	1/16W	
R916	1-216-833-11	METAL CHIP	10K	5%	1/16W	

Ref. No.	Part No.	Description			Remark
R917	1-216-842-11	METAL CHIP	56K	5%	1/16W
R918	1-216-834-11	METAL CHIP	12K	5%	1/16W
R919	1-216-864-11	METAL CHIP	0		
R920	1-216-828-11	METAL CHIP	3.9K	5%	1/16W
R921	1-216-825-11	METAL CHIP	2.2K	5%	1/16W
R923	1-216-824-11	METAL CHIP	1.8K	5%	1/16W
R924	1-216-821-11	METAL CHIP	1K	5%	1/16W
R925	1-216-821-11	METAL CHIP	1K	5%	1/16W
R926	1-216-833-11	METAL CHIP	10K	5%	1/16W
R927	1-216-864-11	METAL CHIP	0		
R930	1-216-864-11	METAL CHIP	0		
R932	1-216-864-11	METAL CHIP	0		
R933	1-216-841-11	METAL CHIP	47K	5%	1/16W
R934	1-216-840-11	METAL CHIP	39K	5%	1/16W
R959	1-216-829-11	METAL CHIP	4.7K	5%	1/16W
R960	1-216-825-11	METAL CHIP	2.2K	5%	1/16W
R961	1-216-825-11	METAL CHIP	2.2K	5%	1/16W
R962	1-216-821-11	METAL CHIP	1K	5%	1/16W
R963	1-216-815-11	METAL CHIP	330	5%	1/16W
R964	1-216-825-11	METAL CHIP	2.2K	5%	1/16W
R966	1-216-833-11	METAL CHIP	10K	5%	1/16W
R967	1-216-825-11	METAL CHIP	2.2K	5%	1/16W
R968	1-216-814-11	METAL CHIP	270	5%	1/16W
R969	1-216-833-11	METAL CHIP	10K	5%	1/16W
R970	1-216-823-11	METAL CHIP	1.5K	5%	1/16W
R976	1-216-829-11	METAL CHIP	4.7K	5%	1/16W
R977	1-216-829-11	METAL CHIP	4.7K	5%	1/16W
R978	1-216-833-11	METAL CHIP	10K	5%	1/16W
R979	1-216-864-11	METAL CHIP	0		
R982	1-216-809-11	METAL CHIP	100	5%	1/16W
R983	1-216-809-11	METAL CHIP	100	5%	1/16W
R984	1-216-809-11	METAL CHIP	100	5%	1/16W

< VARIABLE RESISTOR >

RV702	1-238-089-11	RES, ADJ CERMET 4.7K
RV703	1-238-092-11	RES, ADJ CERMET 47K

< THERMISTOR >

TH700	1-800-200-00	THERMISTOR S-3K

< FLEXIBLE BOARD >

W704	1-633-979-11	FP-299 FLEXIBLE BOARD

< CRYSTAL >

X701	1-567-733-11	VIBRATOR, CRYSTAL (17.734475MHz)
X703	1-578-690-11	VIBRATOR, CERAMIC (500KHz)

****

Ref. No.	Part No.	Description	Remark
	* A-7062-752-A	DK-ED BOARD, COMPLETE	

****

(Including the DK-15 and ED-32 boards)

DK-15 BOARD (Ref. No 5,000 Series)

****

< CAPACITOR >

C950	1-163-038-00	CERAMIC CHIP	0.1uF		25V
C951	1-163-003-11	CERAMIC CHIP	330PF	10%	50V
C952	1-163-005-11	CERAMIC CHIP	470PF	10%	50V

< CONNECTOR >

CN950	1-569-478-21	CONNECTOR, FPC 20P

< IC >

IC950	8-759-145-63	IC uPD7564G-540

< TRANSISTOR >

Q950	8-729-901-01	TRANSISTOR DTC144EK

< RESISTOR >

R950	1-216-073-00	METAL CHIP	10K	5%	1/10W
R951	1-216-073-00	METAL CHIP	10K	5%	1/10W
R952	1-216-073-00	METAL CHIP	10K	5%	1/10W
R953	1-216-089-00	METAL CHIP	47K	5%	1/10W
R954	1-216-029-00	METAL CHIP	150	5%	1/10W
R955	1-216-025-00	METAL CHIP	100	5%	1/10W
R961	1-216-049-00	METAL CHIP	1K	5%	1/10W

< SWITCH >

S950	1-571-684-11	SWITCH, TACTIL (TITLE)
S951	1-571-684-11	SWITCH, TACTIL (AUTO)
S952	1-571-684-11	SWITCH, TACTIL (COLOR/MODE)
S953	1-571-684-11	SWITCH, TACTIL (MEMORY)

< FLEXIBLE BOARD >

W951	1-633-984-11	FP-297 FLEXIBLE BOARD

< CRYSTAL >

X950	1-577-163-21	VIBLATOR, CERAMIC (700KHz)

ED-32 BOARD (Ref. No 5,000 Series)

****

< DIODE >

D920	8-719-941-34	DIODE GL1HD51

Ref. No.	Part No.	Description	Remark
		< SWITCH >	
S920	1-571-684-11	SWITCH, TACTIL (EDIT SERCH -)	
S921	1-571-684-11	SWITCH, TACTIL (EDIT SERCH +)	
		< CONNECTOR >	
W922	1-566-095-11	PIN, BOARD TO BOARD 6P	

****

1-628-060-12 FP-89 FLEXIBLE BOARD
****
(Ref. No 8,000 Series)

Ref. No.	Part No.	Description	Remark
		< DIODE >	
D301	8-719-820-44	PHOTO COUPLER TLP-907-0	
		< TRANSISTOR >	
Q301	8-729-906-48	PHOTO SENSOR EE-TP109	
		< SWITCH >	
S301	1-572-173-11	SWITCH, SLIDE (ENCODER)	

****

1-628-061-12 FP-90 FLEXIBLE BOARD
****
(Ref. No 8,000 Series)

Ref. No.	Part No.	Description	Remark
		< DIODE >	
D302	8-719-940-81	DIODE GL452S	
D303	8-719-820-44	PHOTO COUPLER TLP-907-0	
		< TRANSISTOR >	
Q302	8-729-906-48	PHOTO SENSOR EE-TP109	
		< SWITCH >	
S302	1-572-298-11	SWITCH, PUSH (REC PROOF/TAPE SELECT)	

****

* A-7062-750-A FU-100 BOARD, COMPLETE
****
(Ref. No 5,000 Series)

1-537-281-21 TERMINAL BOARD (EASY CONNECTOR)

Ref. No.	Part No.	Description	Value	Tolerance	Voltage
		< CAPACITOR >			
C503	1-164-156-11	CERAMIC CHIP	0.1uF		25V
C504	1-135-157-21	TANTALUM CHIP	10uF	20%	6.3V
C505	1-164-227-11	CERAMIC CHIP	0.022uF	10%	25V
C506	1-163-038-00	CERAMIC CHIP	0.1uF		25V
C507	1-164-227-11	CERAMIC CHIP	0.022uF	10%	25V
C514	1-162-917-11	CERAMIC CHIP	15PF	5%	50V
C515	1-164-156-11	CERAMIC CHIP	0.1uF		25V
C516	1-135-149-21	TANTALUM CHIP	2.2uF	20%	10V
C517	1-164-156-11	CERAMIC CHIP	0.1uF		25V
C518	1-135-155-21	TANTALUM CHIP	4.7uF	10%	10V
C519	1-164-156-11	CERAMIC CHIP	0.1uF		25V
C994	1-162-966-11	CERAMIC CHIP	0.0022uF	10%	50V
C995	1-128-292-11	ELECT	220uF	20%	10V
C996	1-162-974-11	CERAMIC CHIP	0.01uF		50V

Ref. No.	Part No.	Description	Remark
		< CONNECTOR >	
CN502	1-569-480-11	CONNECTOR, FPC 23P	
CN992	1-565-528-11	PIN, CONNECTOR (PC BOARD) 3P	
		< TRIMMER >	
CT501	1-141-331-11	CAP, CHIP TRIMMER	
		< DIODE >	
D501	8-719-421-27	DIODE MA728	
D503	8-719-404-46	DIODE MA110	
D504	8-719-404-46	DIODE MA110	
D505	8-719-404-46	DIODE MA110	
D510	8-719-812-41	LED TLR124, RED	
D511	8-719-404-46	DIODE MA110	
		< IC >	
IC501	8-759-154-18	IC uPD75316GF-116-3B9	
IC502	8-759-511-22	IC CXA1448N-E2	
IC503	8-759-937-54	IC S-81250HG-RD-S	
		< COIL >	
L501	1-412-032-11	INDUCTOR, CHIP 100uH	
L990	1-412-026-11	INDUCTOR CHIP 1uH	
L991	1-410-337-11	INDUCTOR 1uH	
L992	1-410-337-11	INDUCTOR 1uH	
L996	1-412-026-11	INDUCTOR CHIP 1uH	
L997	1-412-026-11	INDUCTOR CHIP 1uH	
		< IC LINK >	
PS990 ⚠	1-532-841-21	LINK, IC (PRF1600 1.6A)	
PS991 ⚠	1-532-840-21	LINK, IC (PRF1250 1.25A)	
PS992 ⚠	1-532-840-21	LINK, IC (PRF1250 1.25A)	

Note: The components identified by mark ⚠ or dotted line with mark ⚠ are critical for safety. Replace only with part number specified.

Ref. No.	Part No.	Description				Remark
		< TRANSISTOR >				
Q509	8-729-904-20	TRANSISTOR	FMA2			
Q579	8-729-905-12	TRANSISTOR	DTA144EU			
Q990	8-729-101-07	TRANSISTOR	2SB798-DK			
Q991	8-729-905-35	TRANSISTOR	2SC4081-R			
		< RESISTOR >				
R501	1-216-841-11	METAL CHIP	47K	5%	1/16W	
R505	1-216-821-11	METAL CHIP	1K	5%	1/16W	
R511	1-216-829-11	METAL CHIP	4.7K	5%	1/16W	
R512	1-216-829-11	METAL CHIP	4.7K	5%	1/16W	
R513	1-216-829-11	METAL CHIP	4.7K	5%	1/16W	
R514	1-216-829-11	METAL CHIP	4.7K	5%	1/16W	
R515	1-216-829-11	METAL CHIP	4.7K	5%	1/16W	
R516	1-216-829-11	METAL CHIP	4.7K	5%	1/16W	
R517	1-216-829-11	METAL CHIP	4.7K	5%	1/16W	
R518	1-216-851-11	METAL CHIP	330K	5%	1/16W	
R520	1-216-864-11	METAL CHIP	0			
R521	1-216-809-11	METAL CHIP	100	5%	1/16W	
R522	1-216-809-11	METAL CHIP	100	5%	1/16W	
R523	1-216-841-11	METAL CHIP	47K	5%	1/16W	
R524	1-216-841-11	METAL CHIP	47K	5%	1/16W	
R525	1-216-841-11	METAL CHIP	47K	5%	1/16W	
R527	1-216-841-11	METAL CHIP	47K	5%	1/16W	
R528	1-216-841-11	METAL CHIP	47K	5%	1/16W	
R529	1-216-841-11	METAL CHIP	47K	5%	1/16W	
R530	1-216-841-11	METAL CHIP	47K	5%	1/16W	
R531	1-216-809-11	METAL CHIP	100	5%	1/16W	
R532	1-216-809-11	METAL CHIP	100	5%	1/16W	
R533	1-216-821-11	METAL CHIP	1K	5%	1/16W	
R534	1-216-821-11	METAL CHIP	1K	5%	1/16W	
R535	1-216-821-11	METAL CHIP	1K	5%	1/16W	
R536	1-216-821-11	METAL CHIP	1K	5%	1/16W	
R537	1-216-817-11	METAL CHIP	470	5%	1/16W	
R538	1-216-821-11	METAL CHIP	1K	5%	1/16W	
R542	1-216-833-11	METAL CHIP	10K	5%	1/16W	
R543	1-216-833-11	METAL CHIP	10K	5%	1/16W	
R544	1-216-833-11	METAL CHIP	10K	5%	1/16W	
R545	1-216-821-11	METAL CHIP	1K	5%	1/16W	
R546	1-216-821-11	METAL CHIP	1K	5%	1/16W	
R547	1-216-833-11	METAL CHIP	10K	5%	1/16W	
R548	1-216-833-11	METAL CHIP	10K	5%	1/16W	
R549	1-216-833-11	METAL CHIP	10K	5%	1/16W	
R550	1-216-833-11	METAL CHIP	10K	5%	1/16W	
R551	1-216-833-11	METAL CHIP	10K	5%	1/16W	
R552	1-216-833-11	METAL CHIP	10K	5%	1/16W	
R553	1-216-829-11	METAL CHIP	4.7K	5%	1/16W	
R557	1-216-861-11	METAL CHIP	2.2M	5%	1/16W	

Ref. No.	Part No.	Description				Remark
R558	1-216-841-11	METAL CHIP	47K	5%	1/16W	
R559	1-216-841-11	METAL CHIP	47K	5%	1/16W	
R563	1-216-864-11	METAL CHIP	0			
R564	1-216-829-11	METAL CHIP	4.7K	5%	1/16W	
R571	1-216-829-11	METAL CHIP	4.7K	5%	1/16W	
R572	1-216-821-11	METAL CHIP	1K	5%	1/16W	
R573	1-216-821-11	METAL CHIP	1K	5%	1/16W	
R575	1-216-864-11	METAL CHIP	0			
R576	1-216-864-11	METAL CHIP	0			
R577	1-216-864-11	METAL CHIP	0			
R578	1-216-833-11	METAL CHIP	10K	5%	1/16W	
R579	1-216-864-11	METAL CHIP	0			
R590	1-216-833-11	METAL CHIP	10K	5%	1/16W	
R990	1-216-138-00	METAL CHIP	3.3	5%	1/8W	
R991	1-216-830-11	METAL CHIP	5.6K	5%	1/16W	
R992	1-216-820-11	METAL CHIP	820	5%	1/16W	
R993	1-216-836-11	METAL CHIP	18K	5%	1/16W	
R994	1-216-807-11	METAL CHIP	68	5%	1/16W	
		< SWITCH >				
S501	1-571-275-31	SWITCH, SLIDE (REMOTE COMMANDER ON/OFF)				
S502	1-572-284-11	SWITCH, SLIDE (EJECT)				
		< FLEXIBLE BOARD >				
W501	1-633-978-11	FP-295 FLEXIBLE BOARD				
W502	1-633-977-11	FP-293 FLEXIBLE BOARD				
W901	1-633-982-11	FP-294 FLEXIBLE BOARD				
		< CRYSTAL >				
X501	1-577-101-11	VIBRATOR, CERAMIC (4.19MHz)				
X502	1-527-997-21	VIBRATOR, CRYSTAL (32.8KHz)				

****

* A-7071-415-A LI-39 BOARD, COMPLETE
****

(Ref. No 5,000 Series)

Ref. No.	Part No.	Description				Remark
		< CAPACITOR >				
C970	1-163-035-00	CERAMIC CHIP	0.047uF		50V	
C971	1-163-035-00	CERAMIC CHIP	0.047uF		50V	
		< CONNECTOR >				
CN961	1-565-874-11	PIN, CONNECTOR (PC BOARD) 2P				
		< JACK >				
J902	1-550-104-11	HOLDER, BATTERY (LITHIUM)				

****

Ref. No.	Part No.	Description				Remark
*	A-7062-755-A	MC-76 BOARD, COMPLETE				
		*********************				
		(Ref. No 4,000 Series)				
		< CAPACITOR >				
C650	1-162-953-11	CERAMIC CHIP	100PF	5%	50V	
C651	1-162-964-11	CERAMIC CHIP	0.001uF	10%	50V	
C652	1-162-970-11	CERAMIC CHIP	0.01uF	10%	25V	
C653	1-164-633-11	CERAMIC CHIP	0.1uF	10%	25V	
C655	1-164-232-11	CERAMIC CHIP	0.01uF		50V	
C656	1-126-154-11	ELECT	47uF	20%	6.3V	
C657	1-162-963-11	CERAMIC CHIP	680PF	10%	50V	
C659	1-162-638-11	CERAMIC CHIP	1uF		16V	
C674	1-162-953-11	CERAMIC CHIP	100PF	5%	50V	
C675	1-162-638-11	CERAMIC CHIP	1uF		16V	
C677	1-162-964-11	CERAMIC CHIP	0.001uF	10%	50V	
C678	1-126-155-11	ELECT	100uF	20%	6.3V	
C681	1-162-964-11	CERAMIC CHIP	0.001uF	10%	50V	
C683	1-162-964-11	CERAMIC CHIP	0.001uF	10%	50V	
C685	1-164-633-11	CERAMIC CHIP	0.1uF	10%	25V	
C687	1-162-638-11	CERAMIC CHIP	1uF		16V	
		< CONNECTOR >				
CN650	1-565-528-11	PIN, CONNECTOR (PC BOARD) 3P				
CN652	1-565-874-11	PIN, CONNECTOR (PC BOARD) 2P				
		< DIODE >				
D652	8-719-106-43	DIODE RD9.1M-B1				
D655	8-719-404-46	DIODE MA110				
		< IC >				
IC650	8-759-822-37	IC LA7293M-TE-L				
		< JACK >				
J650	1-507-899-31	JACK (SMALL TYPE)				
J651	1-563-454-11	JACK, MINIATURE				
		< COIL >				
L650	1-410-369-11	INDUCTOR CHIP	1uH			
L652	1-410-192-51	INDUCTOR CHIP	1uH			
L653	1-410-192-51	INDUCTOR CHIP	1uH			
L654	1-410-369-11	INDUCTOR CHIP	1uH			
		< TRANSISTOR >				
Q650	8-729-109-44	TRANSISTOR	2SK94			
Q651	8-729-905-35	TRANSISTOR	2SC4081-R			

Ref. No.	Part No.	Description				Remark
		< RESISTOR >				
R650	1-216-833-11	METAL CHIP	10K	5%	1/16W	
R651	1-216-818-11	METAL CHIP	560	5%	1/16W	
R652	1-216-833-11	METAL CHIP	10K	5%	1/16W	
R653	1-216-844-11	METAL CHIP	82K	5%	1/16W	
R654	1-216-845-11	METAL CHIP	100K	5%	1/16W	
R655	1-216-826-11	METAL CHIP	2.7K	5%	1/16W	
R656	1-216-828-11	METAL CHIP	3.9K	5%	1/16W	
R664	1-216-831-11	METAL CHIP	6.8K	5%	1/16W	
R665	1-216-837-11	METAL CHIP	22K	5%	1/16W	
R675	1-216-864-11	METAL CHIP	0			
R680	1-216-857-11	METAL CHIP	1M	5%	1/16W	
R681	1-216-841-11	METAL CHIP	47K	5%	1/16W	
R682	1-216-864-11	METAL CHIP	0			
R696	1-216-864-11	METAL CHIP	0			
		< SWITCH >				
S650	1-553-977-00	SWITCH, SLIDE (BUILT-IN MIC-WIND)				
S651	1-571-787-41	SWITCH, TACTILE (REC START/STOP)				

****

Ref. No.	Part No.	Description				Remark
*	A-7062-751-A	RM-50 BOARD, COMPLETE				
		********************				
		(Ref. No 5,000 Series)				
		< IC >				
IC960	8-749-921-76	IC GP1U56				

****

Ref. No.	Part No.	Description				Remark
*	A-7062-681-A	SS-136 BOARD, COMPLETE				
		**********************				
		(Ref. No 3,000 Series)				
	1-633-923-11	FP-252 FLEXIBLE BOARD				
	1-633-924-11	FP-248 FLEXIBLE BOARD				
	3-831-441-11	CLOTH, UNWEAVED (25X6X0.5)				
		< CAPACITOR >				
C400	1-162-970-11	CERAMIC CHIP	0.01uF	10%	25V	
C401	1-162-970-11	CERAMIC CHIP	0.01uF	10%	25V	
C402	1-162-970-11	CERAMIC CHIP	0.01uF	10%	25V	
C409	1-163-038-00	CERAMIC CHIP	0.1uF		25V	
C501	1-126-157-11	ELECT	10uF	20%	16V	
C502	1-126-160-11	ELECT	1uF	20%	50V	
C504	1-163-038-00	CERAMIC CHIP	0.1uF		25V	
C505	1-164-633-11	CERAMIC CHIP	0.1uF	10%	25V	
C506	1-126-163-11	ELECT	4.7uF	20%	50V	
C507	1-164-330-21	CERAMIC CHIP	0.22uF	10%	16V	

SS-136

Ref. No.	Part No.	Description			Remark
C508	1-164-330-21	CERAMIC CHIP	0.22uF	10%	16V
C509	1-162-967-11	CERAMIC CHIP	0.0033uF	10%	50V
C510	1-162-967-11	CERAMIC CHIP	0.0033uF	10%	50V
C511	1-162-967-11	CERAMIC CHIP	0.0033uF	10%	50V
C512	1-164-232-11	CERAMIC CHIP	0.01uF		50V
C513	1-128-078-11	ELECT	33uF	20%	10V
C514	1-130-495-00	MYLAR	0.1uF	5%	50V
C515	1-162-964-11	CERAMIC CHIP	0.001uF	10%	50V
C516	1-164-633-11	CERAMIC CHIP	0.1uF	10%	25V
C517	1-162-969-11	CERAMIC CHIP	0.0068uF	10%	25V
C518	1-163-038-00	CERAMIC CHIP	0.1uF		25V
C519	1-164-330-21	CERAMIC CHIP	0.22uF	10%	16V
C520	1-164-330-21	CERAMIC CHIP	0.22uF	10%	16V
C521	1-164-330-21	CERAMIC CHIP	0.22uF	10%	16V
C522	1-162-638-11	CERAMIC CHIP	1uF		16V
C523	1-128-078-11	ELECT	33uF	20%	10V
C524	1-163-035-00	CERAMIC CHIP	0.047uF		50V
C525	1-126-162-11	ELECT	3.3uF	20%	50V
C526	1-163-038-00	CERAMIC CHIP	0.1uF		25V
C528	1-162-917-11	CERAMIC CHIP	15PF	5%	50V
C529	1-162-917-11	CERAMIC CHIP	15PF	5%	50V
C530	1-126-157-11	ELECT	10uF	20%	16V
C531	1-126-157-11	ELECT	10uF	20%	16V
C532	1-162-961-11	CERAMIC CHIP	330PF	10%	50V
C533	1-162-968-11	CERAMIC CHIP	0.0047uF	10%	50V
C534	1-162-967-11	CERAMIC CHIP	0.0033uF	10%	50V
C535	1-163-035-00	CERAMIC CHIP	0.047uF		50V
C536	1-162-962-11	CERAMIC CHIP	470PF	10%	50V
C537	1-162-964-11	CERAMIC CHIP	0.001uF	10%	50V
C538	1-162-949-11	CERAMIC CHIP	47PF	5%	50V
C539	1-162-941-11	CERAMIC CHIP	10PF	0.5PF	50V
C540	1-162-965-11	CERAMIC CHIP	0.0015uF	10%	50V
C541	1-162-945-11	CERAMIC CHIP	22PF	5%	50V
C542	1-164-247-11	CERAMIC CHIP	0.047uF	10%	16V
C543	1-164-247-11	CERAMIC CHIP	0.047uF	10%	16V
C545	1-162-964-11	CERAMIC CHIP	0.001uF	10%	50V
C546	1-164-633-11	CERAMIC CHIP	0.1uF	10%	25V
C547	1-164-232-11	CERAMIC CHIP	0.01uF		50V
C548	1-162-638-11	CERAMIC CHIP	1uF		16V
C549	1-162-638-11	CERAMIC CHIP	1uF		16V
C550	1-162-966-11	CERAMIC CHIP	0.0022uF	10%	50V
C551	1-163-023-00	CERAMIC CHIP	0.015uF	5%	50V
C552	1-163-038-00	CERAMIC CHIP	0.1uF		25V
C553	1-162-962-11	CERAMIC CHIP	470PF	10%	50V
C554	1-164-232-11	CERAMIC CHIP	0.01uF		50V
C555	1-162-970-11	CERAMIC CHIP	0.01uF	10%	25V
C556	1-163-035-00	CERAMIC CHIP	0.047uF		50V
C557	1-163-081-00	CERAMIC CHIP	0.22uF		25V
C559	1-162-921-11	CERAMIC CHIP	33PF	5%	50V

Ref. No.	Part No.	Description			Remark
C560	1-162-921-11	CERAMIC CHIP	33PF	5%	50V
C561	1-163-038-00	CERAMIC CHIP	0.1uF		25V
C562	1-126-157-11	ELECT	10uF	20%	16V
C563	1-126-157-11	ELECT	10uF	20%	16V
C564	1-163-038-00	CERAMIC CHIP	0.1uF		25V
C565	1-162-964-11	CERAMIC CHIP	0.001uF	10%	50V
C566	1-162-964-11	CERAMIC CHIP	0.001uF	10%	50V
C567	1-163-037-11	CERAMIC CHIP	0.022uF	10%	25V
C568	1-163-037-11	CERAMIC CHIP	0.022uF	10%	25V
C569	1-163-038-00	CERAMIC CHIP	0.1uF		25V
C592	1-163-038-00	CERAMIC CHIP	0.1uF		25V
C609	1-128-078-11	ELECT	33uF	20%	10V
C610	1-124-589-11	ELECT	47uF	20%	16V
C620	1-164-227-11	CERAMIC CHIP	0.022uF	10%	25V
C625	1-163-038-00	CERAMIC CHIP	0.1uF		25V
C720	1-162-967-11	CERAMIC CHIP	0.0033uF	10%	50V
C901	1-162-921-11	CERAMIC CHIP	33PF	5%	50V
C902	1-164-633-11	CERAMIC CHIP	0.1uF	10%	25V
C903	1-164-227-11	CERAMIC CHIP	0.022uF	10%	25V
C904	1-162-964-11	CERAMIC CHIP	0.001uF	10%	50V
C905	1-164-227-11	CERAMIC CHIP	0.022uF	10%	25V
C906	1-164-227-11	CERAMIC CHIP	0.022uF	10%	25V
C907	1-162-964-11	CERAMIC CHIP	0.001uF	10%	50V
C908	1-162-964-11	CERAMIC CHIP	0.001uF	10%	50V
C909	1-128-078-11	ELECT	33uF	20%	10V
C910	1-128-078-11	ELECT	33uF	20%	10V
C911	1-128-078-11	ELECT	33uF	20%	10V
C912	1-127-558-11	ELECT(SOLID)	10uF	20%	10V
C913	1-128-078-11	ELECT	33uF	20%	10V
C914	1-127-561-11	ELECT(SOLID)	33uF	20%	10V
C915	1-127-558-11	ELECT(SOLID)	10uF	20%	10V
C916	1-163-038-00	CERAMIC CHIP	0.1uF		25V
C917	1-163-038-00	CERAMIC CHIP	0.1uF		25V
C918	1-164-633-11	CERAMIC CHIP	0.1uF	10%	25V
C920	1-164-633-11	CERAMIC CHIP	0.1uF	10%	25V
C921	1-164-633-11	CERAMIC CHIP	0.1uF	10%	25V
C922	1-164-633-11	CERAMIC CHIP	0.1uF	10%	25V
C923	1-162-966-11	CERAMIC CHIP	0.0022uF	10%	50V
C925	1-164-217-11	CERAMIC CHIP	150PF	0.25PF	50V
C930	1-162-967-11	CERAMIC CHIP	0.0033uF	10%	50V
C931	1-162-967-11	CERAMIC CHIP	0.0033uF	10%	50V
C932	1-162-967-11	CERAMIC CHIP	0.0033uF	10%	50V
C935	1-164-156-11	CERAMIC CHIP	0.1uF		25V

< CONNECTOR >

Ref. No.	Part No.	Description
CN501	* 1-565-211-11	CONNECTOR, FPC (ZIF) 22P
CN502	1-569-364-21	CONNECTOR, FPC 19P
CN503	1-565-878-11	PIN, CONNECTOR (PC BOARD) 6P
CN505	1-565-874-11	PIN, CONNECTOR (PC BOARD) 2P

Ref. No.	Part No.	Description	Remark
CN506	1-569-627-11	CONNECTOR, BOARD TO BOARD 16P	
CN507	1-569-626-11	CONNECTOR, BOARD TO BOARD 20P	
CN508	1-565-530-11	PIN, CONNECTOR (PC BOARD) 5P	
CN509	1-568-207-11	CONNECTOR, FPC (ZIF) 23P	
		< DIODE >	
D501	8-719-941-86	DIODE DAN202U	
D506	8-719-941-86	DIODE DAN202U	
D510	8-719-404-46	DIODE MA110	
D901	8-719-938-75	DIODE SB05-05CP	
D902	8-719-938-75	DIODE SB05-05CP	
D903	8-719-938-78	DIODE SB10-05PCP	
		< IC >	
IC501	8-752-818-70	IC CXP80116-830Q	
IC502	8-759-148-05	IC CXA8010M	
IC503	8-759-990-55	IC CXA8006M	
IC504	8-759-805-06	IC CXA1127M	
IC506	8-752-035-48	IC CXA1204Q	
IC507	8-759-998-92	IC LM393D	
IC508	8-759-748-65	IC BR93CS46F	
IC901	8-759-500-42	IC MB3783PFV	
		< COIL >	
L503	1-408-795-21	INDUCTOR, CHIP 330uH	
L505	1-410-381-11	INDUCTOR, CHIP 10uH	
L515	1-412-028-11	INDUCTOR, CHIP 4.7uH	
L901	1-424-104-11	COIL, CHOKE 10uH	
L902	1-424-104-11	COIL, CHOKE 10uH	
L903	1-424-106-11	COIL, CHOKE 47uH	
L904	1-424-106-11	COIL, CHOKE 47uH	
L905	1-424-105-11	COIL, CHOKE 22uH	
L906	1-412-027-11	INDUCTOR CHIP 2.2uH	
L907	1-412-029-11	INDUCTOR, CHIP 10uH	
L908	1-412-029-11	INDUCTOR, CHIP 10uH	
L909	1-412-029-11	INDUCTOR, CHIP 10uH	
		< IC LINK >	
PS501 ⚠	1-532-605-00	LINK, IC (ICP-N10 0.4A)	
		< TRANSISTOR >	
Q400	8-729-905-35	TRANSISTOR 2SC4081-R	
Q401	8-729-905-35	TRANSISTOR 2SC4081-R	
Q402	8-729-905-35	TRANSISTOR 2SC4081-R	
Q502	8-729-905-35	TRANSISTOR 2SC4081-R	
Q503	8-729-905-24	TRANSISTOR 2SA1576-S	
Q505	8-729-905-35	TRANSISTOR 2SC4081-R	
Q506	8-729-905-24	TRANSISTOR 2SA1576-S	

Ref. No.	Part No.	Description	Remark
Q507	8-729-905-35	TRANSISTOR 2SC4081-R	
Q508	8-729-905-24	TRANSISTOR 2SA1576-S	
Q509	8-729-905-35	TRANSISTOR 2SC4081-R	
Q510	8-729-905-35	TRANSISTOR 2SC4081-R	
Q511	8-729-905-24	TRANSISTOR 2SA1576-S	
Q512	8-729-907-00	TRANSISTOR DTC114EU	
Q513	8-729-905-35	TRANSISTOR 2SC4081-R	
Q514	8-729-905-35	TRANSISTOR 2SC4081-R	
Q515	8-729-905-18	TRANSISTOR DTC144EU	
Q516	8-729-905-18	TRANSISTOR DTC144EU	
Q540	8-729-822-48	TRANSISTOR FC101	
Q901	8-729-805-25	TRANSISTOR 2SB1121	
Q902	8-729-805-25	TRANSISTOR 2SB1121	
Q903	8-729-805-25	TRANSISTOR 2SB1121	
Q904	8-729-820-47	TRANSISTOR 2SB1202FAT	
Q905	8-729-905-35	TRANSISTOR 2SC4081-R	
		< RESISTOR >	
R400	1-216-837-11	METAL CHIP 22K 5% 1/16W	
R401	1-216-837-11	METAL CHIP 22K 5% 1/16W	
R402	1-216-823-11	METAL CHIP 1.5K 5% 1/16W	
R403	1-216-821-11	METAL CHIP 1K 5% 1/16W	
R404	1-216-821-11	METAL CHIP 1K 5% 1/16W	
R405	1-216-825-11	METAL CHIP 2.2K 5% 1/16W	
R406	1-216-825-11	METAL CHIP 2.2K 5% 1/16W	
R407	1-216-837-11	METAL CHIP 22K 5% 1/16W	
R408	1-216-837-11	METAL CHIP 22K 5% 1/16W	
R409	1-216-825-11	METAL CHIP 2.2K 5% 1/16W	
R417	1-216-864-11	METAL CHIP 0	
R418	1-216-821-11	METAL CHIP 1K 5% 1/16W	
R419	1-216-864-11	METAL CHIP 0	
R501	1-216-851-11	METAL CHIP 330K 5% 1/16W	
R502	1-216-849-11	METAL CHIP 220K 5% 1/16W	
R503	1-216-841-11	METAL CHIP 47K 5% 1/16W	
R504	1-216-833-11	METAL CHIP 10K 5% 1/16W	
R506	1-216-845-11	METAL CHIP 100K 5% 1/16W	
R507	1-216-833-11	METAL CHIP 10K 5% 1/16W	
R508	1-216-833-11	METAL CHIP 10K 5% 1/16W	
R510	1-216-845-11	METAL CHIP 100K 5% 1/16W	
R511	1-216-833-11	METAL CHIP 10K 5% 1/16W	
R512	1-216-833-11	METAL CHIP 10K 5% 1/16W	
R513	1-216-827-11	METAL CHIP 3.3K 5% 1/16W	
R514	1-216-833-11	METAL CHIP 10K 5% 1/16W	
R515	1-216-827-11	METAL CHIP 3.3K 5% 1/16W	
R516	1-216-833-11	METAL CHIP 10K 5% 1/16W	
R517	1-216-851-11	METAL CHIP 330K 5% 1/16W	
R518	1-216-841-11	METAL CHIP 47K 5% 1/16W	
R519	1-216-827-11	METAL CHIP 3.3K 5% 1/16W	

Note: The components identified by mark ⚠ or dotted line with mark ⚠ are critical for safety. Replace only with part number specified.

SS-136

Ref. No.	Part No.	Description			Remark
R520	1-216-833-11	METAL CHIP	10K	5%	1/16W
R521	1-216-845-11	METAL CHIP	100K	5%	1/16W
R522	1-216-833-11	METAL CHIP	10K	5%	1/16W
R523	1-216-845-11	METAL CHIP	100K	5%	1/16W
R524	1-216-833-11	METAL CHIP	10K	5%	1/16W
R525	1-216-845-11	METAL CHIP	100K	5%	1/16W
R526	1-216-833-11	METAL CHIP	10K	5%	1/16W
R527	1-216-845-11	METAL CHIP	100K	5%	1/16W
R528	1-216-833-11	METAL CHIP	10K	5%	1/16W
R529	1-216-845-11	METAL CHIP	100K	5%	1/16W
R530	1-216-833-11	METAL CHIP	10K	5%	1/16W
R531	1-216-845-11	METAL CHIP	100K	5%	1/16W
R532	1-216-829-11	METAL CHIP	4.7K	5%	1/16W
R534	1-216-845-11	METAL CHIP	100K	5%	1/16W
R535	1-216-843-11	METAL CHIP	68K	5%	1/16W
R536	1-216-857-11	METAL CHIP	1M	5%	1/16W
R537	1-216-833-11	METAL CHIP	10K	5%	1/16W
R538	1-216-833-11	METAL CHIP	10K	5%	1/16W
R539	1-216-833-11	METAL CHIP	10K	5%	1/16W
R540	1-216-845-11	METAL CHIP	100K	5%	1/16W
R541	1-216-833-11	METAL CHIP	10K	5%	1/16W
R542	1-216-837-11	METAL CHIP	22K	5%	1/16W
R543	1-216-829-11	METAL CHIP	4.7K	5%	1/16W
R544	1-216-837-11	METAL CHIP	22K	5%	1/16W
R545	1-216-829-11	METAL CHIP	4.7K	5%	1/16W
R546	1-216-837-11	METAL CHIP	22K	5%	1/16W
R547	1-216-829-11	METAL CHIP	4.7K	5%	1/16W
R548	1-217-671-11	METAL CHIP	1	5%	1/10W
R549	1-217-671-11	METAL CHIP	1	5%	1/10W
R550	1-217-671-11	METAL CHIP	1	5%	1/10W
R551	1-217-671-11	METAL CHIP	1	5%	1/10W
R552	1-216-037-00	METAL CHIP	330	5%	1/10W
R553	1-216-833-11	METAL CHIP	10K	5%	1/16W
R555	1-216-845-11	METAL CHIP	100K	5%	1/16W
R556	1-216-827-11	METAL CHIP	3.3K	5%	1/16W
R558	1-216-691-11	METAL CHIP	47K	0.5%	1/10W
R559	1-216-691-11	METAL CHIP	47K	0.5%	1/10W
R560	1-216-827-11	METAL CHIP	3.3K	5%	1/16W
R561	1-216-825-11	METAL CHIP	2.2K	5%	1/16W
R562	1-216-813-11	METAL CHIP	220	5%	1/16W
R563	1-216-789-11	METAL CHIP	2.2	5%	1/16W
R564	1-216-789-11	METAL CHIP	2.2	5%	1/16W
R565	1-216-789-11	METAL CHIP	2.2	5%	1/16W
R566	1-216-833-11	METAL CHIP	10K	5%	1/16W
R567	1-216-833-11	METAL CHIP	10K	5%	1/16W
R568	1-216-817-11	METAL CHIP	470	5%	1/16W
R569	1-216-817-11	METAL CHIP	470	5%	1/16W
R571	1-216-841-11	METAL CHIP	47K	5%	1/16W
R572	1-216-841-11	METAL CHIP	47K	5%	1/16W
R573	1-216-841-11	METAL CHIP	47K	5%	1/16W
R574	1-216-841-11	METAL CHIP	47K	5%	1/16W
R575	1-216-817-11	METAL CHIP	470	5%	1/16W
R576	1-216-813-11	METAL CHIP	220	5%	1/16W
R577	1-216-811-11	METAL CHIP	150	5%	1/16W
R578	1-216-817-11	METAL CHIP	470	5%	1/16W
R579	1-216-803-11	METAL CHIP	33	5%	1/16W
R582	1-216-864-11	METAL CHIP	0		
R583	1-216-833-11	METAL CHIP	10K	5%	1/16W
R586	1-216-827-11	METAL CHIP	3.3K	5%	1/16W
R587	1-216-827-11	METAL CHIP	3.3K	5%	1/16W
R589	1-216-829-11	METAL CHIP	4.7K	5%	1/16W
R590	1-216-827-11	METAL CHIP	3.3K	5%	1/16W
R591	1-216-827-11	METAL CHIP	3.3K	5%	1/16W
R592	1-216-829-11	METAL CHIP	4.7K	5%	1/16W
R594	1-216-835-11	METAL CHIP	15K	5%	1/16W
R595	1-216-839-11	METAL CHIP	33K	5%	1/16W
R596	1-216-833-11	METAL CHIP	10K	5%	1/16W
R597	1-216-821-11	METAL CHIP	1K	5%	1/16W
R598	1-216-809-11	METAL CHIP	100	5%	1/16W
R599	1-216-809-11	METAL CHIP	100	5%	1/16W
R600	1-216-831-11	METAL CHIP	6.8K	5%	1/16W
R601	1-216-839-11	METAL CHIP	33K	5%	1/16W
R602	1-216-839-11	METAL CHIP	33K	5%	1/16W
R603	1-216-857-11	METAL CHIP	1M	5%	1/16W
R604	1-216-837-11	METAL CHIP	22K	5%	1/16W
R605	1-216-833-11	METAL CHIP	10K	5%	1/16W
R606	1-216-837-11	METAL CHIP	22K	5%	1/16W
R607	1-216-857-11	METAL CHIP	1M	5%	1/16W
R608	1-216-854-11	METAL CHIP	560K	5%	1/16W
R609	1-216-833-11	METAL CHIP	10K	5%	1/16W
R610	1-216-845-11	METAL CHIP	100K	5%	1/16W
R611	1-216-845-11	METAL CHIP	100K	5%	1/16W
R613	1-216-845-11	METAL CHIP	100K	5%	1/16W
R614	1-216-833-11	METAL CHIP	10K	5%	1/16W
R615	1-216-851-11	METAL CHIP	330K	5%	1/16W
R616	1-216-857-11	METAL CHIP	1M	5%	1/16W
R618	1-216-847-11	METAL CHIP	150K	5%	1/16W
R619	1-216-837-11	METAL CHIP	22K	5%	1/16W
R620	1-216-837-11	METAL CHIP	22K	5%	1/16W
R621	1-216-857-11	METAL CHIP	1M	5%	1/16W
R622	1-216-821-11	METAL CHIP	1K	5%	1/16W
R623	1-216-833-11	METAL CHIP	10K	5%	1/16W
R624	1-216-833-11	METAL CHIP	10K	5%	1/16W
R625	1-216-845-11	METAL CHIP	100K	5%	1/16W
R626	1-216-833-11	METAL CHIP	10K	5%	1/16W
R627	1-216-833-11	METAL CHIP	10K	5%	1/16W
R628	1-216-829-11	METAL CHIP	4.7K	5%	1/16W
R629	1-216-182-00	METAL GLAZE	220	5%	1/8W

Ref. No.	Part No.	Description			Remark
R630	1-216-182-00	METAL GLAZE	220	5%	1/8W
R631	1-216-815-11	METAL CHIP	330	5%	1/16W
R632	1-216-813-11	METAL CHIP	220	5%	1/16W
R689	1-216-841-11	METAL CHIP	47K	5%	1/16W
R714	1-216-827-11	METAL CHIP	3.3K	5%	1/16W
R715	1-216-831-11	METAL CHIP	6.8K	5%	1/16W
R716	1-216-829-11	METAL CHIP	4.7K	5%	1/16W
R717	1-216-829-11	METAL CHIP	4.7K	5%	1/16W
R719	1-216-841-11	METAL CHIP	47K	5%	1/16W
R720	1-216-841-11	METAL CHIP	47K	5%	1/16W
R726	1-216-829-11	METAL CHIP	4.7K	5%	1/16W
R727	1-216-833-11	METAL CHIP	10K	5%	1/16W
R728	1-216-821-11	METAL CHIP	1K	5%	1/16W
R730	1-216-837-11	METAL CHIP	22K	5%	1/16W
R735	1-216-825-11	METAL CHIP	2.2K	5%	1/16W
R761	1-216-829-11	METAL CHIP	4.7K	5%	1/16W
R762	1-216-827-11	METAL CHIP	3.3K	5%	1/16W
R763	1-216-837-11	METAL CHIP	22K	5%	1/16W
R764	1-216-857-11	METAL CHIP	1M	5%	1/16W
R765	1-216-825-11	METAL CHIP	2.2K	5%	1/16W
R810	1-216-841-11	METAL CHIP	47K	5%	1/16W
R811	1-216-821-11	METAL CHIP	1K	5%	1/16W
R812	1-216-821-11	METAL CHIP	1K	5%	1/16W
R813	1-216-821-11	METAL CHIP	1K	5%	1/16W
R840	1-216-296-00	METAL CHIP	0	5%	1/8W
R841	1-216-296-00	METAL CHIP	0	5%	1/8W
R842	1-216-296-00	METAL CHIP	0	5%	1/8W
R850	1-216-827-11	METAL CHIP	3.3K	5%	1/16W
R851	1-216-864-11	METAL CHIP	0		
R855	1-216-809-11	METAL CHIP	100	5%	1/16W
R857	1-216-861-11	METAL CHIP	2.2M	5%	1/16W
R901	1-216-831-11	METAL CHIP	6.8K	5%	1/16W
R902	1-216-829-11	METAL CHIP	4.7K	5%	1/16W
R903	1-216-829-11	METAL CHIP	4.7K	5%	1/16W
R904	1-216-825-11	METAL CHIP	2.2K	5%	1/16W
R905	1-216-823-11	METAL CHIP	1.5K	5%	1/16W
R906	1-216-823-11	METAL CHIP	1.5K	5%	1/16W
R907	1-216-823-11	METAL CHIP	1.5K	5%	1/16W
R908	1-216-166-00	METAL GLAZE	47	5%	1/8W
R909	1-216-166-00	METAL GLAZE	47	5%	1/8W
R910	1-216-164-00	METAL GLAZE	39	5%	1/8W
R911	1-216-845-11	METAL CHIP	100K	5%	1/16W
R912	1-216-833-11	METAL CHIP	10K	5%	1/16W
R913	1-216-813-11	METAL CHIP	220	5%	1/16W
R914	1-216-831-11	METAL CHIP	6.8K	5%	1/16W
R915	1-216-833-11	METAL CHIP	10K	5%	1/16W
R916	1-216-833-11	METAL CHIP	10K	5%	1/16W
R924	1-216-821-11	METAL CHIP	1K	5%	1/16W
R927	1-216-833-11	METAL CHIP	10K	5%	1/16W

< VARIABLE RESISTOR >

Ref. No.	Part No.	Description
RV901	1-238-089-11	RES, ADJ CERMET4.7K
RV902	1-238-087-11	RES, ADJ CERMET1K

< CONNECTOR >

Ref. No.	Part No.	Description
W505	1-562-880-11	CONNECTOR, CARD EDGE 15P
W510	1-569-346-11	CONNECTOR, FPC (TRANSLATION) 10P

< CRYSTAL >

Ref. No.	Part No.	Description
X501	1-577-467-21	VIBRATOR, CRYSTAL (16MHz)
X502	1-567-827-11	VIBRATOR, CRYSTAL (5.86MHz)

****

* A-7071-416-A SW-183 BOARD, COMPLETE
****

(Ref.No 4,000 Series)

< CONNECTOR >

Ref. No.	Part No.	Description
CN930	* 1-566-761-11	PIN, CONNECTOR (PC BOARD) 6P
CN931	1-575-846-11	CONNECTOR, FPC (NON ZIF) 6P

< DIODE >

Ref. No.	Part No.	Description	
D900	8-719-977-34	DIODE	DTZ12
D901	8-719-977-34	DIODE	DTZ12
D902	8-719-404-46	DIODE	MA110
D903	8-719-977-34	DIODE	DTZ12
D905	8-719-404-46	DIODE	MA110
D906	8-719-404-46	DIODE	MA110
D907	8-719-404-46	DIODE	MA110
D908	8-719-976-97	DIODE	DTZ5.1

< JACK >

Ref. No.	Part No.	Description
J900	1-507-929-41	JACK **(HEADPHONE)**
J901	1-565-276-21	JACK, ULTRA SMALL 1P **(REMOTE)**

< COIL >

Ref. No.	Part No.	Description	
L900	1-410-369-11	INDUCTOR CHIP	1uH
L901	1-410-369-11	INDUCTOR CHIP	1uH
L903	1-410-192-51	INDUCTOR CHIP	1uH
L904	1-410-369-11	INDUCTOR CHIP	1uH
L905	1-410-369-11	INDUCTOR CHIP	1uH

< TRANSISTOR >

Ref. No.	Part No.	Description	
Q900	8-729-901-01	TRANSISTOR	DTC144EK
Q901	8-729-902-XX	TRANSISTOR	DTC114TK

SW-183 | VA-67

Ref. No.	Part No.	Description			Remark
		< RESISTOR >			
R900	1-216-073-00	METAL CHIP	10K	5%	1/10W
R901	1-216-073-00	METAL CHIP	10K	5%	1/10W
R902	1-216-295-00	METAL CHIP	0	5%	1/10W
		< SWITCH >			
S900	1-570-870-11	SWITCH, SLIDE (STANDBY/LOCK)			
S901	1-571-838-11	SWITCH, TACTIL (START/STOP)			

****

* A-7062-749-A VA-67 BOARD, COMPLETE (AEP/UK)
****

* A-7062-842-A VA-67 BOARD, COMPLETE (E)
****

(Ref.No 2,000 Series)

3-719-695-01 SCREW (M1.7X3.5), SPECIAL HEAD
3-744-842-01 SUPPORT, CT PC BOARD

Ref. No.	Part No.	Description			Remark
		< CAPACITOR >			
C002	1-162-947-11	CERAMIC CHIP	33PF	5%	50V
C071	1-128-004-11	ELECT CHIP	10uF	20%	16V
C072	1-164-227-11	CERAMIC CHIP	0.022uF	10%	25V
C101	1-162-974-11	CERAMIC CHIP	0.01uF		50V
C102	1-128-004-11	ELECT CHIP	10uF	20%	16V
C103	1-163-035-00	CERAMIC CHIP	0.047uF		50V
C104	1-162-947-11	CERAMIC CHIP	33PF	5%	50V
C105	1-162-965-11	CERAMIC CHIP	0.0015uF	10%	50V
C108	1-162-958-11	CERAMIC CHIP	270PF	5%	50V
C109	1-162-937-11	CERAMIC CHIP	6PF	0.5PF	50V
C110	1-162-945-11	CERAMIC CHIP	22PF	5%	50V
C111	1-164-227-11	CERAMIC CHIP	0.022uF	10%	25V
C112	1-162-970-11	CERAMIC CHIP	0.01uF	10%	25V
C113	1-162-942-11	CERAMIC CHIP	12PF	5%	50V
C114	1-162-970-11	CERAMIC CHIP	0.01uF	10%	25V
C115	1-162-974-11	CERAMIC CHIP	0.01uF		50V
C117	1-162-947-11	CERAMIC CHIP	33PF	5%	50V
C121	1-164-222-11	CERAMIC CHIP	0.22uF		25V
C122	1-128-004-11	ELECT CHIP	10uF	20%	16V
C123	1-162-954-11	CERAMIC CHIP	120PF	5%	50V
C126	1-162-949-11	CERAMIC CHIP	47PF	5%	50V
C127	1-164-382-11	CERAMIC CHIP	91PF	5%	50V
C129	1-162-956-11	CERAMIC CHIP	180PF	5%	50V
C141	1-162-974-11	CERAMIC CHIP	0.01uF		50V
C143	1-162-948-11	CERAMIC CHIP	39PF	5%	50V
C144	1-162-946-11	CERAMIC CHIP	27PF	5%	50V
C146	1-162-995-11	CERAMIC CHIP	0.022uF		50V
C147	1-162-995-11	CERAMIC CHIP	0.022uF		50V
C171	1-124-778-00	ELECT CHIP	22uF	20%	6.3V
C172	1-162-943-11	CERAMIC CHIP	15PF	5%	50V
C181	1-164-005-11	CERAMIC CHIP	0.47uF		25V
C183	1-162-974-11	CERAMIC CHIP	0.01uF		50V
C200	1-135-091-00	TANTALUM CHIP	1uF	20%	16V
C201	1-162-959-11	CERAMIC CHIP	330PF	5%	50V
C202	1-162-952-11	CERAMIC CHIP	82PF	5%	50V
C203	1-164-005-11	CERAMIC CHIP	0.47uF		25V
C204	1-128-004-11	ELECT CHIP	10uF	20%	16V
C205	1-128-004-11	ELECT CHIP	10uF	20%	16V
C206	1-162-974-11	CERAMIC CHIP	0.01uF		50V
C207	1-162-974-11	CERAMIC CHIP	0.01uF		50V
C208	1-128-004-11	ELECT CHIP	10uF	20%	16V
C209	1-126-154-11	ELECT	47uF	20%	6.3V
C210	1-128-008-11	ELECT CHIP	3.3uF	20%	35V
C211	1-128-004-11	ELECT CHIP	10uF	20%	16V
C212	1-162-974-11	CERAMIC CHIP	0.01uF		50V
C213	1-128-008-11	ELECT CHIP	3.3uF	20%	35V
C214	1-162-950-11	CERAMIC CHIP	56PF	5%	50V
C215	1-128-004-11	ELECT CHIP	10uF	20%	16V
C216	1-126-607-11	ELECT CHIP	47uF	20%	4V
C218	1-126-209-11	ELECT CHIP	100uF	20%	4V
C219	1-162-955-11	CERAMIC CHIP	150PF	5%	50V
C220	1-162-944-11	CERAMIC CHIP	18PF	5%	50V
C221	1-162-953-11	CERAMIC CHIP	100PF	5%	50V
C222	1-162-948-11	CERAMIC CHIP	39PF	5%	50V
C224	1-135-180-21	TANTALUM CHIP	3.3uF	20%	6.3V
C225	1-164-156-11	CERAMIC CHIP	0.1uF		25V
C226	1-162-974-11	CERAMIC CHIP	0.01uF		50V
C227	1-135-180-21	TANTALUM CHIP	3.3uF	20%	6.3V
C228	1-163-038-00	CERAMIC CHIP	0.1uF		25V
C229	1-135-180-21	TANTALUM CHIP	3.3uF	20%	6.3V
C230	1-162-974-11	CERAMIC CHIP	0.01uF		50V
C231	1-162-974-11	CERAMIC CHIP	0.01uF		50V
C232	1-162-638-11	CERAMIC CHIP	1uF		16V
C233	1-162-974-11	CERAMIC CHIP	0.01uF		50V
C234	1-135-157-21	TANTALUM CHIP	10uF	20%	6.3V
C235	1-128-004-11	ELECT CHIP	10uF	20%	16V
C236	1-162-950-11	CERAMIC CHIP	56PF	5%	50V
C237	1-128-004-11	ELECT CHIP	10uF	20%	16V
C238	1-162-953-11	CERAMIC CHIP	100PF	5%	50V
C239	1-162-974-11	CERAMIC CHIP	0.01uF		50V
C240	1-128-004-11	ELECT CHIP	10uF	20%	16V
C241	1-135-201-11	TANTALUM CHIP	10uF	20%	4V
C242	1-128-003-11	ELECT CHIP	22uF	20%	4V
C246	1-128-003-11	ELECT CHIP	22uF	20%	4V
C247	1-164-005-11	CERAMIC CHIP	0.47uF		25V
C248	1-128-004-11	ELECT CHIP	10uF	20%	16V
C249	1-128-004-11	ELECT CHIP	10uF	20%	16V
C250	1-128-004-11	ELECT CHIP	10uF	20%	16V

Ref. No.	Part No.	Description				Remark
C251	1-128-004-11	ELECT CHIP	10uF	20%	16V	
C252	1-164-222-11	CERAMIC CHIP	0.22uF		25V	
C253	1-164-005-11	CERAMIC CHIP	0.47uF		25V	
C254	1-128-004-11	ELECT CHIP	10uF	20%	16V	
C255	1-128-006-11	ELECT CHIP	4.7uF	20%	25V	
C256	1-126-246-11	ELECT CHIP	220uF	20%	4V	
C257	1-162-974-11	CERAMIC CHIP	0.01uF		50V	
C258	1-128-004-11	ELECT CHIP	10uF	20%	16V	
C259	1-164-182-11	CERAMIC CHIP	0.0033uF	10%	50V	
C262	1-162-995-11	CERAMIC CHIP	0.022uF		50V	
C263	1-126-207-11	ELECT CHIP	33uF	20%	4V	
C264	1-162-962-11	CERAMIC CHIP	470PF	10%	50V	
C265	1-126-205-11	ELECT CHIP	47uF	20%	6.3V	
C267	1-124-778-00	ELECT CHIP	22uF	20%	6.3V	
C268	1-162-974-11	CERAMIC CHIP	0.01uF		50V	
C269	1-128-004-11	ELECT CHIP	10uF	20%	16V	
C270	1-163-129-00	CERAMIC CHIP	330PF	5%	50V	
C271	1-163-131-00	CERAMIC CHIP	390PF	5%	50V	
C273	1-162-974-11	CERAMIC CHIP	0.01uF		50V	
C274	1-128-004-11	ELECT CHIP	10uF	20%	16V	
C275	1-162-974-11	CERAMIC CHIP	0.01uF		50V	
C276	1-128-004-11	ELECT CHIP	10uF	20%	16V	
C277	1-162-942-11	CERAMIC CHIP	12PF	5%	50V	
C278	1-163-135-00	CERAMIC CHIP	560PF	5%	50V	
C279	1-162-958-11	CERAMIC CHIP	270PF	5%	50V	
C280	1-162-957-11	CERAMIC CHIP	220PF	5%	50V	
C284	1-128-004-11	ELECT CHIP	10uF	20%	16V	
C285	1-163-035-00	CERAMIC CHIP	0.047uF		50V	
C286	1-162-974-11	CERAMIC CHIP	0.01uF		50V	
C287	1-164-156-11	CERAMIC CHIP	0.1uF		25V	
C288	1-128-292-11	ELECT	220uF	20%	10V	
C289	1-162-950-11	CERAMIC CHIP	56PF	5%	50V	
C301	1-162-944-11	CERAMIC CHIP	18PF	5%	50V	
C302	1-162-974-11	CERAMIC CHIP	0.01uF		50V	
C303	1-162-970-11	CERAMIC CHIP	0.01uF	10%	25V	
C305	1-162-945-11	CERAMIC CHIP	22PF	5%	50V	
C306	1-162-970-11	CERAMIC CHIP	0.01uF	10%	25V	
C307	1-128-004-11	ELECT CHIP	10uF	20%	16V	
C308	1-162-995-11	CERAMIC CHIP	0.022uF		50V	
C309	1-135-176-21	TANTALUM CHIP	0.68uF	10%	20V	
C310	1-128-013-11	ELECT CHIP	1uF	20%	50V	
C311	1-128-013-11	ELECT CHIP	1uF	20%	50V	
C312	1-162-969-11	CERAMIC CHIP	0.0068uF	10%	25V	
C315	1-162-970-11	CERAMIC CHIP	0.01uF	10%	25V	
C316	1-128-004-11	ELECT CHIP	10uF	20%	16V	
C317	1-128-004-11	ELECT CHIP	10uF	20%	16V	
C318	1-162-974-11	CERAMIC CHIP	0.01uF		50V	
C319	1-164-217-11	CERAMIC CHIP	150PF	0.25PF	50V	
C320	1-162-964-11	CERAMIC CHIP	0.001uF	10%	50V	
C321	1-162-949-11	CERAMIC CHIP	47PF	5%	50V	
C322	1-163-038-00	CERAMIC CHIP	0.1uF		25V	
C323	1-162-952-11	CERAMIC CHIP	82PF	5%	50V	
C324	1-162-967-11	CERAMIC CHIP	0.0033uF	10%	50V	
C325	1-162-974-11	CERAMIC CHIP	0.01uF		50V	
C326	1-162-954-11	CERAMIC CHIP	120PF	5%	50V	
C327	1-162-951-11	CERAMIC CHIP	68PF	5%	50V	
C328	1-162-950-11	CERAMIC CHIP	56PF	5%	50V	
C329	1-162-953-11	CERAMIC CHIP	100PF	5%	50V	
C330	1-162-974-11	CERAMIC CHIP	0.01uF		50V	
C331	1-128-004-11	ELECT CHIP	10uF	20%	16V	
C332	1-162-974-11	CERAMIC CHIP	0.01uF		50V	
C333	1-162-941-11	CERAMIC CHIP	10PF	0.5PF	50V	
C334	1-126-205-11	ELECT CHIP	47uF	20%	6.3V	
C335	1-162-957-11	CERAMIC CHIP	220PF	5%	50V	
C336	1-162-974-11	CERAMIC CHIP	0.01uF		50V	
C337	1-162-974-11	CERAMIC CHIP	0.01uF		50V	
C338	1-162-995-11	CERAMIC CHIP	0.022uF		50V	
C339	1-162-974-11	CERAMIC CHIP	0.01uF		50V	
C340	1-162-937-11	CERAMIC CHIP	6PF	0.5PF	50V	
C342	1-162-949-11	CERAMIC CHIP	47PF	5%	50V	
C352	1-128-013-11	ELECT CHIP	1uF	20%	50V	
C353	1-162-964-11	CERAMIC CHIP	0.001uF	10%	50V	
C354	1-128-006-11	ELECT CHIP	4.7uF	20%	25V	
C355	1-162-974-11	CERAMIC CHIP	0.01uF		50V	
C357	1-128-004-11	ELECT CHIP	10uF	20%	16V	
C358	1-162-974-11	CERAMIC CHIP	0.01uF		50V	
C359	1-163-118-00	CERAMIC CHIP	110PF	5%	50V	
C360	1-162-964-11	CERAMIC CHIP	0.001uF	10%	50V	
C361	1-128-007-11	ELECT CHIP	2.2uF	20%	35V	
C362	1-162-964-11	CERAMIC CHIP	0.001uF	10%	50V	
C363	1-164-145-11	CERAMIC CHIP	390PF	5%	50V	
C364	1-162-970-11	CERAMIC CHIP	0.01uF	10%	25V	
C365	1-162-970-11	CERAMIC CHIP	0.01uF	10%	25V	
C366	1-162-936-11	CERAMIC CHIP	5PF	0.25PF	50V	
C367	1-162-974-11	CERAMIC CHIP	0.01uF		50V	
C368	1-162-943-11	CERAMIC CHIP	15PF	5%	50V	
C370	1-164-156-11	CERAMIC CHIP	0.1uF		25V	
C371	1-162-921-11	CERAMIC CHIP	33PF	5%	50V	
C400	1-162-971-11	CERAMIC CHIP	0.001uF		50V	(E)
C402	1-162-971-11	CERAMIC CHIP	0.001uF		50V	
C403	1-162-971-11	CERAMIC CHIP	0.001uF		50V	
C405	1-162-971-11	CERAMIC CHIP	0.001uF		50V	
C406	1-164-489-11	CERAMIC CHIP	0.22uF	10%	16V	
C407	1-128-006-11	ELECT CHIP	4.7uF	20%	25V	
C408	1-124-779-00	ELECT CHIP	10uF	20%	16v	
C409	1-128-006-11	ELECT CHIP	4.7uF	20%	25V	
C411	1-126-205-11	ELECT CHIP	47uF	20%	6.3V	

Ref. No.	Part No.	Description			Remark
C412	1-162-970-11	CERAMIC CHIP	0.01uF	10%	25V
C414	1-126-206-11	ELECT CHIP	100uF	20%	6.3V
C416	1-163-809-11	CERAMIC CHIP	0.047uF	10%	25V
C417	1-163-989-11	CERAMIC CHIP	0.033uF	10%	25V
C418	1-164-156-11	CERAMIC CHIP	0.1uF		25V
C419	1-126-205-11	ELECT CHIP	47uF	20%	6.3V
C421	1-162-965-11	CERAMIC CHIP	0.0015uF	10%	50V
C422	1-162-638-11	CERAMIC CHIP	1uF		16V
C423	1-162-949-11	CERAMIC CHIP	47PF	5%	50V
C424	1-162-970-11	CERAMIC CHIP	0.01uF	10%	25V
C427	1-162-969-11	CERAMIC CHIP	0.0068uF	10%	25V
C429	1-128-013-11	ELECT CHIP	1uF	20%	50V
C430	1-126-607-11	ELECT CHIP	47uF	20%	4V
C431	1-126-205-11	ELECT CHIP	47uF	20%	6.3V
C432	1-128-003-11	ELECT CHIP	22uF	20%	4V
C434	1-128-004-11	ELECT CHIP	10uF	20%	16V
C435	1-128-013-11	ELECT CHIP	1uF	20%	50V
C436	1-128-006-11	ELECT CHIP	4.7uF	20%	25V
C437	1-162-957-11	CERAMIC CHIP	220PF	5%	50V
C439	1-128-013-11	ELECT CHIP	1uF	20%	50V
C441	1-162-637-11	CERAMIC CHIP	0.47uF		16V (E)
C469	1-162-966-11	CERAMIC CHIP	0.0022uF	10%	50V
C615	1-162-950-11	CERAMIC CHIP	56PF	5%	50V
C620	1-162-954-11	CERAMIC CHIP	0.001uF	10%	50V (E)

< FILTER >

Ref. No.	Part No.	Description
CF301	1-577-162-11	FILTER, CERAMIC

< CONNECTOR >

Ref. No.	Part No.	Description
CN401	* 1-566-761-11	PIN, CONNECTOR (PC BOARD) 6P
CN506	1-569-486-11	CONNECTOR, BOARD TO BOARD 16P
CN507	1-569-485-11	CONNECTOR, BOARD TO BOARD 20P
CN508	1-569-478-21	CONNECTOR, FPC 20P
CN601	* 1-566-764-11	PIN, CONNECTOR (PC BOARD) 9P
CN703	1-568-359-41	CONNECTOR, BOARD TO BOARD 20P
CN704	1-569-363-21	CONNECTOR, FPC 15P
CN901	1-566-524-21	CONNECTOR, FPC (ZIF) 8P

< DIODE >

Ref. No.	Part No.	Description	
D101	8-719-800-76	DIODE	1SS226
D202	8-719-941-86	DIODE	DAN202U
D203	8-719-941-86	DIODE	DAN202U
D205	8-719-941-86	DIODE	DAN202U
D208	8-719-941-86	DIODE	DAN202U
D209	8-719-941-86	DIODE	DAN202U
D210	8-719-404-46	DIODE	MA110
D214	8-719-940-45	DIODE	DWA010
D215	8-719-404-46	DIODE	MA110
D216	8-719-404-46	DIODE	MA110
D217	8-719-801-41	DIODE	1SS196
D218	8-719-800-76	DIODE	1SS226
D351	8-719-404-46	DIODE	MA110

< FILTER >

Ref. No.	Part No.	Description
FL201	1-236-751-21	FILTER, LOW PASS
FL202	1-415-764-21	DELAY LINE, LC
FL203	1-236-848-21	FILTER, LOW PASS
FL204	1-415-818-11	DELAY LINE, LC (Y)
FL205	1-239-055-21	FILTER, LOW PASS (CCD.PAL.Y)
FL301	1-236-849-21	FILTER, BAND PASS
FL302	1-236-186-11	FILTER, BAND PASS
FL303	1-236-850-21	FILTER, BAND PASS

< IC >

Ref. No.	Part No.	Description	
IC001	8-759-999-02	IC	TL1596CDB
IC201	8-752-036-19	IC	CXA1207R
IC202	8-752-333-24	IC	CXL1506M
IC203	8-752-036-20	IC	CXA1208R
IC204	8-759-605-61	IC	CXA1203N
IC205	8-759-710-29	IC	NJM2235M
IC206	8-759-320-76	IC	HA118070FP
IC207	8-759-710-07	IC	NJM2234M
IC400	8-759-823-20	IC	CXA-1488R

< JACK >

Ref. No.	Part No.	Description
J201	1-537-142-21	TERMINAL BOARD (VIDEO/AUDIO/DC OUT)

< COIL >

Ref. No.	Part No.	Description
L101	1-412-032-11	INDUCTOR, CHIP 100uH
L102	1-412-280-31	INDUCTOR 330uH
L103	1-410-167-41	INDUCTOR, CHIP 820uH
L105	1-410-657-21	INDUCTOR, CHIP 180uH
L106	1-410-387-11	INDUCTOR, CHIP 33uH
L109	1-410-381-11	INDUCTOR, CHIP 10uH
L110	1-410-658-31	INDUCTOR, CHIP 220uH
L122	1-410-658-31	INDUCTOR, CHIP 220uH
L123	1-410-655-31	INDUCTOR, CHIP 120uH
L124	1-412-280-31	INDUCTOR 330uH
L125	1-410-380-31	INDUCTOR, CHIP 8.2uH
L126	1-412-032-11	INDUCTOR, CHIP 100uH
L129	1-412-026-11	INDUCTOR, CHIP 1uH
L171	1-410-392-11	INDUCTOR, CHIP 82uH
L181	1-412-026-11	INDUCTOR, CHIP 1uH
L201	1-410-390-11	INDUCTOR, CHIP 56uH
L203	1-410-370-31	INDUCTOR, CHIP 1.2uH
L204	1-410-391-11	INDUCTOR, CHIP 68uH
L205	1-412-031-11	INDUCTOR, CHIP 47uH
L206	1-412-031-11	INDUCTOR, CHIP 47uH

Ref. No.	Part No.	Description		Remark
L209	1-412-031-11	INDUCTOR, CHIP 47uH		
L210	1-410-393-11	INDUCTOR, CHIP 100uH		
L211	1-410-375-11	INDUCTOR, CHIP 3.3uH		
L212	1-410-379-21	INDUCTOR, CHIP 6.8uH		
L214	1-410-377-31	INDUCTOR, CHIP 4.7uH		
L301	1-410-393-11	INDUCTOR, CHIP 100uH		
L302	1-410-386-11	INDUCTOR, CHIP 27uH		
L304	1-410-393-11	INDUCTOR, CHIP 100uH		
L305	1-410-393-11	INDUCTOR, CHIP 100uH		
L306	1-410-655-31	INDUCTOR, CHIP 120uH		
L307	1-410-656-11	INDUCTOR, CHIP 150uH		
L309	1-410-379-21	INDUCTOR, CHIP 6.8uH		
L400	1-410-384-31	INDUCTOR, CHIP 18uH		
		< TRANSISTOR >		
Q001	8-729-905-23	TRANSISTOR	2SA1576-R	
Q002	8-729-905-35	TRANSISTOR	2SC4081-R	
Q004	8-729-905-35	TRANSISTOR	2SC4081-R	
Q005	8-729-905-35	TRANSISTOR	2SC4081-R	
Q060	8-729-905-18	TRANSISTOR	DTC144EU	
Q061	8-729-905-18	TRANSISTOR	DTC144EU	
Q062	8-729-905-18	TRANSISTOR	DTC144EU	
Q063	8-729-905-12	TRANSISTOR	DTA144EU	
Q101	8-729-905-23	TRANSISTOR	2SA1576-R	
Q102	8-729-905-18	TRANSISTOR	DTC144EU	
Q105	8-729-905-35	TRANSISTOR	2SC4081-R	
Q106	8-729-102-07	TRANSISTOR	2SC2223-F13	
Q107	8-729-905-12	TRANSISTOR	DTA144EU	
Q109	8-729-905-35	TRANSISTOR	2SC4081-R	
Q115	8-729-905-23	TRANSISTOR	2SA1576-R	
Q116	8-729-905-18	TRANSISTOR	DTC144EU	
Q119	8-729-102-07	TRANSISTOR	2SC2223-F13	
Q121	8-729-905-23	TRANSISTOR	2SA1576-R	
Q122	8-729-102-07	TRANSISTOR	2SC2223-F13	
Q123	8-729-905-35	TRANSISTOR	2SC4081-R	
Q130	8-729-905-35	TRANSISTOR	2SC4081-R	
Q131	8-729-905-23	TRANSISTOR	2SA1576-R	
Q140	8-729-905-12	TRANSISTOR	DTA144EU	
Q141	8-729-905-35	TRANSISTOR	2SC4081-R	
Q142	8-729-141-48	TRANSISTOR	2SB624-BV345	
Q154	8-729-905-35	TRANSISTOR	2SC4081-R	
Q171	8-729-905-35	TRANSISTOR	2SC4081-R	
Q172	8-729-905-35	TRANSISTOR	2SC4081-R	
Q191	8-729-905-35	TRANSISTOR	2SC4081-R	
Q192	8-729-905-18	TRANSISTOR	DTC144EU	
Q195	8-729-905-12	TRANSISTOR	DTA144EU	
Q196	8-729-905-18	TRANSISTOR	DTC144EU	
Q201	8-729-905-35	TRANSISTOR	2SC4081-R	
Q202	8-729-905-12	TRANSISTOR	DTA144EU	

Ref. No.	Part No.	Description		Remark
Q203	8-729-905-23	TRANSISTOR	2SA1576-R	
Q204	8-729-905-35	TRANSISTOR	2SC4081-R	
Q206	8-729-905-35	TRANSISTOR	2SC4081-R	
Q209	8-729-905-18	TRANSISTOR	DTC144EU	
Q210	8-729-905-23	TRANSISTOR	2SA1576-R	
Q211	8-729-905-35	TRANSISTOR	2SC4081-R	
Q212	8-729-905-35	TRANSISTOR	2SC4081-R	
Q215	8-729-905-23	TRANSISTOR	2SA1576-R	
Q220	8-729-141-48	TRANSISTOR	2SB624-BV345	
Q221	8-729-905-18	TRANSISTOR	DTC144EU	
Q222	8-729-905-12	TRANSISTOR	DTA144EU	
Q223	8-729-905-35	TRANSISTOR	2SC4081-R	
Q224	8-729-905-35	TRANSISTOR	2SC4081-R	
Q225	8-729-905-12	TRANSISTOR	DTA144EU	
Q226	8-729-905-35	TRANSISTOR	2SC4081-R	
Q227	8-729-905-35	TRANSISTOR	2SC4081-R	
Q228	8-729-905-23	TRANSISTOR	2SA1576-R	
Q229	8-729-905-35	TRANSISTOR	2SC4081-R	
Q231	8-729-905-35	TRANSISTOR	2SC4081-R	
Q232	8-729-905-35	TRANSISTOR	2SC4081-R	
Q238	8-729-905-23	TRANSISTOR	2SA1576-R	
Q240	8-729-905-35	TRANSISTOR	2SC4081-R	
Q241	8-729-905-23	TRANSISTOR	2SA1576-R	
Q243	8-729-905-18	TRANSISTOR	DTC144EU	
Q244	8-729-905-18	TRANSISTOR	DTC144EU	
Q245	8-729-905-XX	TRANSISTOR	DTC114TU	
Q246	8-729-905-XX	TRANSISTOR	DTC114TU	
Q247	8-729-905-XX	TRANSISTOR	DTC114TU	
Q248	8-729-905-18	TRANSISTOR	DTC144EU	
Q250	8-729-905-35	TRANSISTOR	2SC4081-R	
Q251	8-729-905-18	TRANSISTOR	DTC144EU	
Q301	8-729-905-23	TRANSISTOR	2SA1576-R	
Q303	8-729-905-35	TRANSISTOR	2SC4081-R	
Q304	8-729-905-35	TRANSISTOR	2SC4081-R	
Q306	8-729-905-35	TRANSISTOR	2SC4081-R	
Q307	8-729-905-18	TRANSISTOR	DTC144EU	
Q310	8-729-905-35	TRANSISTOR	2SC4081-R	
Q311	8-729-905-35	TRANSISTOR	2SC4081-R	
Q351	8-729-905-35	TRANSISTOR	2SC4081-R	
Q352	8-729-905-35	TRANSISTOR	2SC4081-R	
Q353	8-729-905-35	TRANSISTOR	2SC4081-R	
Q354	8-729-905-35	TRANSISTOR	2SC4081-R	
Q356	8-729-905-18	TRANSISTOR	DTC144EU	
Q357	8-729-905-12	TRANSISTOR	DTA144EU	
Q358	8-729-905-18	TRANSISTOR	DTC144EU	
Q359	8-729-102-08	TRANSISTOR	2SC2223-F14	
Q360	8-729-905-18	TRANSISTOR	DTC144EU	
Q362	8-729-905-18	TRANSISTOR	DTC144EU	
Q400	8-729-905-18	TRANSISTOR	DTC144EU	

VA-67

Ref. No.	Part No.	Description				Remark
Q404	8-729-904-07	TRANSISTOR	FMG2			
		< RESISTOR >				
R001	1-216-839-11	METAL CHIP	33K	5%	1/16W	
R002	1-216-842-11	METAL CHIP	56K	5%	1/16W	
R003	1-216-817-11	METAL CHIP	470	5%	1/16W	
R004	1-216-821-11	METAL CHIP	1K	5%	1/16W	
R005	1-216-825-11	METAL CHIP	2.2K	5%	1/16W	
R006	1-216-825-11	METAL CHIP	2.2K	5%	1/16W	
R011	1-216-826-11	METAL CHIP	2.7K	5%	1/16W	
R012	1-216-825-11	METAL CHIP	2.2K	5%	1/16W	
R015	1-216-809-11	METAL CHIP	100	5%	1/16W	
R016	1-216-813-11	METAL CHIP	220	5%	1/16W	
R017	1-216-816-11	METAL CHIP	390	5%	1/16W	
R018	1-216-814-11	METAL CHIP	270	5%	1/16W	
R020	1-216-818-11	METAL CHIP	560	5%	1/16W	
R025	1-216-821-11	METAL CHIP	1K	5%	1/16W	
R032	1-216-864-11	METAL CHIP	0			
R034	1-216-864-11	METAL CHIP	0			
R036	1-216-824-11	METAL CHIP	1.8K	5%	1/16W	
R041	1-216-825-11	METAL CHIP	2.2K	5%	1/16W	
R042	1-216-824-11	METAL CHIP	1.8K	5%	1/16W	
R043	1-216-839-11	METAL CHIP	33K	5%	1/16W	
R044	1-216-837-11	METAL CHIP	22K	5%	1/16W	
R045	1-216-821-11	METAL CHIP	1K	5%	1/16W	
R047	1-216-825-11	METAL CHIP	2.2K	5%	1/16W	
R048	1-216-825-11	METAL CHIP	2.2K	5%	1/16W	
R049	1-216-821-11	METAL CHIP	1K	5%	1/16W	
R050	1-216-825-11	METAL CHIP	2.2K	5%	1/16W	
R051	1-216-833-11	METAL CHIP	10K	5%	1/16W	
R052	1-216-841-11	METAL CHIP	47K	5%	1/16W	
R053	1-216-821-11	METAL CHIP	1K	5%	1/16W	
R060	1-216-864-11	METAL CHIP	0			
R061	1-216-821-11	METAL CHIP	1K	5%	1/16W	
R062	1-216-847-11	METAL CHIP	150K	5%	1/16W	
R063	1-216-847-11	METAL CHIP	150K	5%	1/16W	
R065	1-216-817-11	METAL CHIP	470	5%	1/16W	
R066	1-216-809-11	METAL CHIP	100	5%	1/16W	
R071	1-216-661-11	METAL CHIP	2.7K	0.5%	1/10W	
R072	1-216-833-11	METAL CHIP	10K	5%	1/16W	
R073	1-216-833-11	METAL CHIP	10K	5%	1/16W	
R074	1-216-809-11	METAL CHIP	100	5%	1/16W	
R076	1-216-864-11	METAL CHIP	0			(AEP/UK)
R087	1-216-831-11	METAL CHIP	6.8K	5%	1/16W	
R088	1-216-821-11	METAL CHIP	1K	5%	1/16W	
R089	1-216-838-11	METAL CHIP	27K	5%	1/16W	
R090	1-216-833-11	METAL CHIP	10K	5%	1/16W	
R093	1-216-823-11	METAL CHIP	1.5K	5%	1/16W	
R097	1-216-845-11	METAL CHIP	100K	5%	1/16W	
R099	1-216-833-11	METAL CHIP	10K	5%	1/16W	
R101	1-216-833-11	METAL CHIP	10K	5%	1/16W	
R102	1-216-833-11	METAL CHIP	10K	5%	1/16W	
R103	1-216-821-11	METAL CHIP	1K	5%	1/16W	
R104	1-216-811-11	METAL CHIP	150	5%	1/16W	
R108	1-216-837-11	METAL CHIP	22K	5%	1/16W	
R109	1-216-839-11	METAL CHIP	33K	5%	1/16W	
R110	1-216-825-11	METAL CHIP	2.2K	5%	1/16W	
R111	1-216-819-11	METAL CHIP	680	5%	1/16W	
R112	1-216-826-11	METAL CHIP	2.7K	5%	1/16W	
R113	1-216-814-11	METAL CHIP	270	5%	1/16W	
R114	1-216-834-11	METAL CHIP	12K	5%	1/16W	
R115	1-216-833-11	METAL CHIP	10K	5%	1/16W	
R116	1-216-817-11	METAL CHIP	470	5%	1/16W	
R117	1-216-808-11	METAL CHIP	82	5%	1/16W	
R118	1-216-832-11	METAL CHIP	8.2K	5%	1/16W	
R119	1-216-823-11	METAL CHIP	1.5K	5%	1/16W	
R120	1-216-824-11	METAL CHIP	1.8K	5%	1/16W	
R124	1-216-821-11	METAL CHIP	1K	5%	1/16W	
R125	1-216-836-11	METAL CHIP	18K	5%	1/16W	
R126	1-216-836-11	METAL CHIP	18K	5%	1/16W	
R127	1-216-821-11	METAL CHIP	1K	5%	1/16W	
R128	1-216-864-11	METAL CHIP	0			
R132	1-216-830-11	METAL CHIP	5.6K	5%	1/16W	
R133	1-216-818-11	METAL CHIP	560	5%	1/16W	
R134	1-216-818-11	METAL CHIP	560	5%	1/16W	
R141	1-216-837-11	METAL CHIP	22K	5%	1/16W	
R142	1-216-829-11	METAL CHIP	4.7K	5%	1/16W	
R158	1-216-818-11	METAL CHIP	560	5%	1/16W	
R159	1-216-837-11	METAL CHIP	22K	5%	1/16W	
R160	1-216-837-11	METAL CHIP	22K	5%	1/16W	
R161	1-216-817-11	METAL CHIP	470	5%	1/16W	
R162	1-216-817-11	METAL CHIP	470	5%	1/16W	
R163	1-216-813-11	METAL CHIP	220	5%	1/16W	
R164	1-216-817-11	METAL CHIP	470	5%	1/16W	
R165	1-216-809-11	METAL CHIP	100	5%	1/16W	
R166	1-216-821-11	METAL CHIP	1K	5%	1/16W	
R167	1-216-833-11	METAL CHIP	10K	5%	1/16W	
R168	1-216-829-11	METAL CHIP	4.7K	5%	1/16W	
R170	1-216-828-11	METAL CHIP	3.9K	5%	1/16W	
R171	1-216-825-11	METAL CHIP	2.2K	5%	1/16W	
R172	1-216-840-11	METAL CHIP	39K	5%	1/16W	
R173	1-216-835-11	METAL CHIP	15K	5%	1/16W	
R174	1-216-821-11	METAL CHIP	1K	5%	1/16W	
R175	1-216-822-11	METAL CHIP	1.2K	5%	1/16W	
R176	1-216-833-11	METAL CHIP	10K	5%	1/16W	
R178	1-216-818-11	METAL CHIP	560	5%	1/16W	
R181	1-216-804-11	METAL CHIP	39	5%	1/16W	

Ref. No.	Part No.	Description				Remark
R182	1-216-804-11	METAL CHIP	39	5%	1/16W	
R183	1-216-807-11	METAL CHIP	68	5%	1/16W	
R184	1-216-138-00	METAL CHIP	3.3	5%	1/8W	
R185	1-216-830-11	METAL CHIP	5.6K	5%	1/16W	
R186	1-216-836-11	METAL CHIP	18K	5%	1/16W	
R187	1-216-820-11	METAL CHIP	820	5%	1/16W	
R188	1-216-833-11	METAL CHIP	10K	5%	1/16W	
R191	1-216-841-11	METAL CHIP	47K	5%	1/16W	
R192	1-216-841-11	METAL CHIP	47K	5%	1/16W	
R193	1-216-825-11	METAL CHIP	2.2K	5%	1/16W	
R196	1-216-864-11	METAL CHIP	0			
R201	1-216-822-11	METAL CHIP	1.2K	5%	1/16W	
R202	1-216-841-11	METAL CHIP	47K	5%	1/16W	
R203	1-216-813-11	METAL CHIP	220	5%	1/16W	
R204	1-216-821-11	METAL CHIP	1K	5%	1/16W	
R206	1-216-821-11	METAL CHIP	1K	5%	1/16W	
R208	1-216-816-11	METAL CHIP	390	5%	1/16W	
R209	1-216-814-11	METAL CHIP	270	5%	1/16W	
R210	1-216-819-11	METAL CHIP	680	5%	1/16W	
R211	1-216-822-11	METAL CHIP	1.2K	5%	1/16W	
R212	1-216-830-11	METAL CHIP	5.6K	5%	1/16W	
R213	1-216-817-11	METAL CHIP	470	5%	1/16W	
R214	1-216-820-11	METAL CHIP	820	5%	1/16W	
R215	1-216-817-11	METAL CHIP	470	5%	1/16W	
R216	1-216-817-11	METAL CHIP	470	5%	1/16W	
R219	1-216-833-11	METAL CHIP	10K	5%	1/16W	
R220	1-216-810-11	METAL CHIP	120	5%	1/16W	
R221	1-216-844-11	METAL CHIP	82K	5%	1/16W	
R222	1-216-857-11	METAL CHIP	1M	5%	1/16W	
R225	1-216-839-11	METAL CHIP	33K	5%	1/16W	
R226	1-216-817-11	METAL CHIP	470	5%	1/16W	
R227	1-216-049-00	METAL CHIP	1K	5%	1/10W	
R228	1-216-842-11	METAL CHIP	56K	5%	1/16W	
R229	1-216-821-11	METAL CHIP	1K	5%	1/16W	
R230	1-216-838-11	METAL CHIP	27K	5%	1/16W	
R231	1-216-825-11	METAL CHIP	2.2K	5%	1/16W	
R232	1-216-825-11	METAL CHIP	2.2K	5%	1/16W	
R233	1-216-821-11	METAL CHIP	1K	5%	1/16W	
R234	1-216-821-11	METAL CHIP	1K	5%	1/16W	
R235	1-216-825-11	METAL CHIP	2.2K	5%	1/16W	
R236	1-216-821-11	METAL CHIP	1K	5%	1/16W	
R237	1-216-821-11	METAL CHIP	1K	5%	1/16W	
R239	1-216-825-11	METAL CHIP	2.2K	5%	1/16W	
R242	1-216-864-11	METAL CHIP	0			
R244	1-216-829-11	METAL CHIP	4.7K	5%	1/16W	
R245	1-216-833-11	METAL CHIP	10K	5%	1/16W	
R246	1-216-833-11	METAL CHIP	10K	5%	1/16W	
R247	1-216-833-11	METAL CHIP	10K	5%	1/16W	
R248	1-216-841-11	METAL CHIP	47K	5%	1/16W	
R249	1-216-821-11	METAL CHIP	1K	5%	1/16W	
R250	1-216-821-11	METAL CHIP	1K	5%	1/16W	
R251	1-216-845-11	METAL CHIP	100K	5%	1/16W	
R252	1-216-853-11	METAL CHIP	470K	5%	1/16W	
R255	1-216-833-11	METAL CHIP	10K	5%	1/16W	
R256	1-216-833-11	METAL CHIP	10K	5%	1/16W	
R257	1-216-821-11	METAL CHIP	1K	5%	1/16W	
R258	1-216-821-11	METAL CHIP	1K	5%	1/16W	
R259	1-216-833-11	METAL CHIP	10K	5%	1/16W	
R260	1-216-829-11	METAL CHIP	4.7K	5%	1/16W	
R261	1-216-827-11	METAL CHIP	3.3K	5%	1/16W	
R262	1-216-832-11	METAL CHIP	8.2K	5%	1/16W	
R263	1-216-822-11	METAL CHIP	1.2K	5%	1/16W	
R265	1-216-643-11	METAL CHIP	470	0.5%	1/10W	
R267	1-216-827-11	METAL CHIP	3.3K	5%	1/16W	
R268	1-218-708-11	METAL CHIP	4.7K	0.50%	1/16W	
R269	1-218-688-11	METAL CHIP	680	0.50%	1/16W	
R270	1-218-706-11	METAL CHIP	3.9K	0.50%	1/16W	
R272	1-216-817-11	METAL CHIP	470	5%	1/16W	
R273	1-218-708-11	METAL CHIP	4.7K	0.50%	1/16W	
R274	1-218-704-11	METAL CHIP	3.3K	0.50%	1/16W	
R276	1-216-820-11	METAL CHIP	820	5%	1/16W	
R278	1-216-820-11	METAL CHIP	820	5%	1/16W	
R280	1-216-841-11	METAL CHIP	47K	5%	1/16W	
R281	1-216-824-11	METAL CHIP	1.8K	5%	1/16W	
R282	1-216-833-11	METAL CHIP	10K	5%	1/16W	
R283	1-216-833-11	METAL CHIP	10K	5%	1/16W	
R284	1-216-864-11	METAL CHIP	0			
R285	1-216-821-11	METAL CHIP	1K	5%	1/16W	
R286	1-216-811-11	METAL CHIP	150	5%	1/16W	
R287	1-216-813-11	METAL CHIP	220	5%	1/16W	
R288	1-216-827-11	METAL CHIP	3.3K	5%	1/16W	
R290	1-216-815-11	METAL CHIP	330	5%	1/16W	
R291	1-216-815-11	METAL CHIP	330	5%	1/16W	
R292	1-216-820-11	METAL CHIP	820	5%	1/16W	
R293	1-216-864-11	METAL CHIP	0			
R294	1-216-839-11	METAL CHIP	33K	5%	1/16W	
R296	1-216-821-11	METAL CHIP	1K	5%	1/16W	
R297	1-216-841-11	METAL CHIP	47K	5%	1/16W	
R298	1-216-831-11	METAL CHIP	6.8K	5%	1/16W	
R300	1-216-864-11	METAL CHIP	0			
R301	1-216-822-11	METAL CHIP	1.2K	5%	1/16W	
R302	1-216-824-11	METAL CHIP	1.8K	5%	1/16W	
R303	1-216-834-11	METAL CHIP	12K	5%	1/16W	
R304	1-216-838-11	METAL CHIP	27K	5%	1/16W	
R305	1-216-825-11	METAL CHIP	2.2K	5%	1/16W	
R308	1-216-827-11	METAL CHIP	3.3K	5%	1/16W	
R309	1-216-829-11	METAL CHIP	4.7K	5%	1/16W	

VA-67

Ref. No.	Part No.	Description				Remark
R310	1-216-830-11	METAL CHIP	5.6K	5%	1/16W	
R311	1-216-830-11	METAL CHIP	5.6K	5%	1/16W	
R312	1-216-829-11	METAL CHIP	4.7K	5%	1/16W	
R314	1-216-830-11	METAL CHIP	5.6K	5%	1/16W	
R315	1-216-828-11	METAL CHIP	3.9K	5%	1/16W	
R316	1-216-699-11	METAL CHIP	100K	0.5%	1/10W	
R318	1-216-809-11	METAL CHIP	100	5%	1/16W	
R319	1-216-825-11	METAL CHIP	2.2K	5%	1/16W	
R321	1-216-864-11	METAL CHIP	0			
R322	1-216-825-11	METAL CHIP	2.2K	5%	1/16W	
R323	1-216-825-11	METAL CHIP	2.2K	5%	1/16W	
R324	1-216-809-11	METAL CHIP	100	5%	1/16W	
R325	1-216-829-11	METAL CHIP	4.7K	5%	1/16W	
R326	1-216-821-11	METAL CHIP	1K	5%	1/16W	
R331	1-216-864-11	METAL CHIP	0			
R332	1-216-817-11	METAL CHIP	470	5%	1/16W	
R333	1-216-833-11	METAL CHIP	10K	5%	1/16W	
R334	1-216-829-11	METAL CHIP	4.7K	5%	1/16W	
R335	1-216-829-11	METAL CHIP	4.7K	5%	1/16W	
R339	1-216-837-11	METAL CHIP	22K	5%	1/16W	
R341	1-216-837-11	METAL CHIP	22K	5%	1/16W	
R342	1-216-833-11	METAL CHIP	10K	5%	1/16W	
R343	1-216-837-11	METAL CHIP	22K	5%	1/16W	
R346	1-216-815-11	METAL CHIP	330	5%	1/16W	
R347	1-216-824-11	METAL CHIP	1.8K	5%	1/16W	
R348	1-216-827-11	METAL CHIP	3.3K	5%	1/16W	
R350	1-216-824-11	METAL CHIP	1.8K	5%	1/16W	
R351	1-216-845-11	METAL CHIP	100K	5%	1/16W	
R352	1-216-845-11	METAL CHIP	100K	5%	1/16W	
R353	1-216-845-11	METAL CHIP	100K	5%	1/16W	
R354	1-216-864-11	METAL CHIP	0			
R355	1-216-829-11	METAL CHIP	4.7K	5%	1/16W	
R356	1-216-829-11	METAL CHIP	4.7K	5%	1/16W	
R357	1-216-845-11	METAL CHIP	100K	5%	1/16W	
R358	1-216-699-11	METAL CHIP	100K	0.5%	1/10W	
R359	1-216-827-11	METAL CHIP	3.3K	5%	1/16W	
R360	1-216-825-11	METAL CHIP	2.2K	5%	1/16W	
R361	1-216-832-11	METAL CHIP	8.2K	5%	1/16W	
R362	1-216-833-11	METAL CHIP	10K	5%	1/16W	
R364	1-216-821-11	METAL CHIP	1K	5%	1/16W	
R365	1-216-825-11	METAL CHIP	2.2K	5%	1/16W	
R366	1-216-817-11	METAL CHIP	470	5%	1/16W	
R367	1-216-833-11	METAL CHIP	10K	5%	1/16W	
R368	1-216-821-11	METAL CHIP	1K	5%	1/16W	
R369	1-216-839-11	METAL CHIP	33K	5%	1/16W	
R370	1-216-821-11	METAL CHIP	1K	5%	1/16W	
R371	1-216-821-11	METAL CHIP	1K	5%	1/16W	
R372	1-216-821-11	METAL CHIP	1K	5%	1/16W	
R373	1-216-825-11	METAL CHIP	2.2K	5%	1/16W	

Ref. No.	Part No.	Description				Remark
R374	1-216-825-11	METAL CHIP	2.2K	5%	1/16W	
R375	1-216-839-11	METAL CHIP	33K	5%	1/16W	
R376	1-216-829-11	METAL CHIP	4.7K	5%	1/16W	
R389	1-216-190-00	METAL GLAZE	470	5%	1/8W	
R390	1-216-839-11	METAL CHIP	33K	5%	1/16W	
R391	1-216-837-11	METAL CHIP	22K	5%	1/16W	
R392	1-216-837-11	METAL CHIP	22K	5%	1/16W	
R393	1-216-831-11	METAL CHIP	6.8K	5%	1/16W	
R394	1-216-833-11	METAL CHIP	10K	5%	1/16W	
R395	1-216-833-11	METAL CHIP	10K	5%	1/16W	
R396	1-216-829-11	METAL CHIP	4.7K	5%	1/16W	
R397	1-216-841-11	METAL CHIP	47K	5%	1/16W	
R398	1-216-823-11	METAL CHIP	1.5K	5%	1/16W	
R400	1-216-864-11	METAL CHIP	0			(AEP/UK)
R405	1-216-825-11	METAL CHIP	2.2K	5%	1/16W	
R407	1-216-841-11	METAL CHIP	47K	5%	1/16W	
R408	1-216-837-11	METAL CHIP	22K	5%	1/16W	
R409	1-216-843-11	METAL CHIP	68K	5%	1/16W	
R412	1-216-833-11	METAL CHIP	10K	5%	1/16W	
R413	1-216-830-11	METAL CHIP	5.6K	5%	1/16W	
R415	1-216-837-11	METAL CHIP	22K	5%	1/16W	
R416	1-216-859-11	METAL GLAZE	1.5M	5%	1/16W	
R418	1-216-830-11	METAL CHIP	5.6K	5%	1/16W	
R419	1-216-821-11	METAL CHIP	1K	5%	1/16W	
R420	1-216-832-11	METAL CHIP	8.2K	5%	1/16W	
R421	1-216-864-11	METAL CHIP	0			
R423	1-216-864-11	METAL CHIP	0			
R426	1-216-817-11	METAL CHIP	470	5%	1/16W	
R427	1-216-807-11	METAL CHIP	68	5%	1/16W	
R428	1-216-817-11	METAL CHIP	470	5%	1/16W	
R429	1-216-839-11	METAL CHIP	33K	5%	1/16W	
R430	1-216-833-11	METAL CHIP	10K	5%	1/16W	
R432	1-216-864-11	METAL CHIP	0			
R433	1-216-864-11	METAL CHIP	0			
R434	1-216-836-11	METAL CHIP	18K	5%	1/16W	(E)
R435	1-216-841-11	METAL CHIP	47K	5%	1/16W	(E)
R459	1-216-864-11	METAL CHIP	0			
R466	1-216-841-11	METAL CHIP	47K	5%	1/16W	
R483	1-216-864-11	METAL CHIP	0			
R485	1-216-864-11	METAL CHIP	0			
R486	1-216-841-11	METAL CHIP	47K	5%	1/16W	
R490	1-216-864-11	METAL CHIP	0			
R491	1-216-841-11	METAL CHIP	47K	5%	1/16W	
R602	1-216-831-11	METAL CHIP	6.8K	5%	1/16W	
R602	1-216-832-11	METAL CHIP	8.2K	5%	1/16W	
R606	1-216-864-11	METAL CHIP	0			
R607	1-216-864-11	METAL CHIP	0			
R608	1-216-833-11	METAL CHIP	10K	5%	1/16W	
R621	1-216-864-11	METAL CHIP	0			

Ref. No.	Part No.	Description			Remark
R624	1-216-864-11	METAL CHIP	0		
R630	1-216-864-11	METAL CHIP	0		
R636	1-216-821-11	METAL CHIP	1K	5%	1/16W

< VARIABLE RESISTOR >

Ref. No.	Part No.	Description
RV101	1-238-087-11	RES, ADJ CERMET 1K
RV201	1-238-091-11	RES, ADJ CERMET 22K
RV202	1-238-087-11	RES, ADJ CERMET 1K
RV203	1-238-088-11	RES, ADJ, CERMET 2.2K
RV204	1-238-087-11	RES, ADJ CERMET 1K
RV205	1-238-091-11	RES, ADJ CERMET 22K
RV206	1-238-088-11	RES, ADJ, CERMET 2.2K
RV207	1-238-089-11	RES, ADJ CERMET 4.7K
RV210	1-238-088-11	RES, ADJ, CERMET 2.2K
RV211	1-238-092-11	RES, ADJ CERMET 47K
RV301	1-238-086-11	RES, ADJ CERMET 470
RV351	1-238-090-11	RES, ADJ CERMET 10K
RV353	1-238-087-11	RES, ADJ CERMET 1K
RV400	1-238-090-11	RES, ADJ CERMET 10K
RV401	1-238-090-11	RES, ADJ CERMET 10K

< SWITCH >

Ref. No.	Part No.	Description
S201	1-572-275-11	SWITCH, SLIDE (IN/OUT) (E)

< THERMISTOR >

Ref. No.	Part No.	Description
TH001	1-809-357-21	THERMISTOR

< FLEXIBLE BOARD >

Ref. No.	Part No.	Description
W702	1-633-976-11	FP-251 FLEXIBLE BOARD

< CRYSTAL >

Ref. No.	Part No.	Description
X301	1-577-117-21	VIBRATOR, CRYSTAL (4.433619MHz)

****

* A-7062-745-A VC-99 BOARD, COMPLETE
****
(Ref. No 1,000 Series)

< CAPACITOR >

Ref. No.	Part No.	Description			Remark
C302	1-162-974-11	CERAMIC CHIP	0.01uF		50V
C401	1-164-634-11	CERAMIC CHIP	1uF		16V
C402	1-164-634-11	CERAMIC CHIP	1uF		16V
C403	1-164-156-11	CERAMIC CHIP	0.1uF		25V
C404	1-164-634-11	CERAMIC CHIP	1uF		16V
C406	1-164-156-11	CERAMIC CHIP	0.1uF		25V
C407	1-164-634-11	CERAMIC CHIP	1uF		16V
C408	1-162-964-11	CERAMIC CHIP	0.001uF	10%	50V
C409	1-164-156-11	CERAMIC CHIP	0.1uF		25V
C410	1-162-974-11	CERAMIC CHIP	0.01uF		50V
C411	1-124-566-11	ELECT	120uF	20%	6.3V
C412	1-162-974-11	CERAMIC CHIP	0.01uF		50V
C413	1-164-634-11	CERAMIC CHIP	1uF		16V
C414	1-162-917-11	CERAMIC CHIP	15PF	5%	50V
C415	1-163-038-00	CERAMIC CHIP	0.1uF		25V
C416	1-163-038-00	CERAMIC CHIP	0.1uF		25V
C417	1-163-038-00	CERAMIC CHIP	0.1uF		25V
C419	1-162-964-11	CERAMIC CHIP	0.001uF	10%	50V
C501	1-126-205-11	ELECT CHIP	47uF	20%	6.3V
C502	1-162-974-11	CERAMIC CHIP	0.01uF		50V
C503	1-164-634-11	CERAMIC CHIP	1uF		16V
C504	1-128-292-11	ELECT	220uF	20%	10V
C506	1-164-156-11	CERAMIC CHIP	0.1uF		25V
C507	1-162-974-11	CERAMIC CHIP	0.01uF		50V
C508	1-135-072-21	TANTALUM CHIP	0.22uF	10%	35V
C509	1-162-970-11	CERAMIC CHIP	0.01uF	10%	25V
C510	1-128-004-11	ELECT CHIP	10uF	20%	16V
C511	1-135-180-21	TANTALUM CHIP	3.3uF	20%	6.3V
C512	1-135-180-21	TANTALUM CHIP	3.3uF	20%	6.3V
C513	1-135-180-21	TANTALUM CHIP	3.3uF	20%	6.3V
C514	1-164-156-11	CERAMIC CHIP	0.1uF		25V
C517	1-135-181-21	TANTALUM CHIP	4.7uF	20%	6.3V
C518	1-164-156-11	CERAMIC CHIP	0.1uF		25V
C519	1-164-156-11	CERAMIC CHIP	0.1uF		25V
C520	1-135-071-21	TANTALUM CHIP	0.15uF	10%	35V
C521	1-135-177-21	TANTALUM CHIP	1uF	20%	20V
C651	1-126-217-11	ELECT CHIP	15uF	20%	10V
C654	1-162-970-11	CERAMIC CHIP	0.01uF	10%	25V
C655	1-162-970-11	CERAMIC CHIP	0.01uF	10%	25V
C656	1-162-970-11	CERAMIC CHIP	0.01uF	10%	25V
C657	1-162-974-11	CERAMIC CHIP	0.01uF		50V
C658	1-128-004-11	ELECT CHIP	10uF	20%	16V
C659	1-164-156-11	CERAMIC CHIP	0.1uF		25V
C660	1-164-156-11	CERAMIC CHIP	0.1uF		25V
C661	1-164-005-11	CERAMIC CHIP	0.47uF		25V
C662	1-162-964-11	CERAMIC CHIP	0.001uF	10%	50V
C663	1-163-059-00	CERAMIC CHIP	0.01uF	10%	50V
C664	1-135-177-21	TANTALUM CHIP	1uF	20%	20V
C665	1-162-974-11	CERAMIC CHIP	0.01uF		50V
C666	1-162-974-11	CERAMIC CHIP	0.01uF		50V
C667	1-164-156-11	CERAMIC CHIP	0.1uF		25V

< CONNECTOR >

Ref. No.	Part No.	Description
CN301	1-568-338-11	CONNECTOR, BOARD TO BOARD 24P
CN302	1-568-331-11	CONNECTOR, BOARD TO BOARD 10P
CN303	1-566-534-11	CONNECTOR, FPC (ZIF) 18P
CN304	1-565-877-11	PIN, CONNECTOR (PC BOARD) 5P
CN305	1-566-528-21	CONNECTOR, FPC (ZIF) 12P

Ref. No.	Part No.	Description	Remark
CN306	1-565-528-21	PIN, CONNECTOR (PC BOARD) 3P	
CN307	* 1-565-876-11	PIN, CONNECTOR (PC BOARD) 4P	
CN308	* 1-565-541-11	PIN, CONNECTOR (PC BOARD) 2P	
CN651	* 1-566-187-11	PIN, CONNECTOR (PC BOARD) 8P	
CN652	1-565-527-11	PIN, CONNECTOR (PC BOARD) 2P	
CN653	1-565-527-11	PIN, CONNECTOR (PC BOARD) 2P	
CN654	* 1-565-529-21	PIN, CONNECTOR (PC BOARD) 4P	
CN655	1-565-530-11	PIN, CONNECTOR (PC BOARD) 5P	

< DIODE >

Ref. No.	Part No.	Description	Remark
D501	8-719-404-46	DIODE MA110	
D502	8-719-404-46	DIODE MA110	
D503	8-719-404-46	DIODE MA110	
D504	8-719-404-46	DIODE MA110	
D600	8-719-420-90	DIODE MA8051-M	

< FILTER >

Ref. No.	Part No.	Description	Remark
FL301	1-236-759-21	FILTER, LOW PASS (TRAP)	
FL302	1-415-731-21	DELAY LINE, LC (YH)	
FL303	1-415-819-11	DELAY LINE, LC	
FL401	1-415-730-21	DELAY LINE, LC (100NS)	

< HIC >

Ref. No.	Part No.	Description	Remark
HIC301	A-7068-186-A	HIC MX-10 BOARD, COMPLETE	

< IC >

Ref. No.	Part No.	Description	Remark
IC301	8-759-946-00	IC MB88341PFV	
IC401	8-752-038-XX	IC CXA1392R	
IC501	8-759-038-86	IC MC68HC11E9FU-SC400225	
IC502	8-759-008-95	IC MC14028BF	
IC504	8-759-635-27	IC M62352GP	
IC505	8-759-998-96	IC LM324D	
IC507	8-759-030-74	IC SC14S66F	
IC508	8-759-937-56	IC S-8054ALB-S	
IC509	8-759-509-05	IC XRU4066BF	
IC510	8-759-998-96	IC LM324D	
IC651	8-759-981-82	IC RC3414M	
IC652	8-759-037-20	IC MPC1737M	
IC653	8-759-998-98	IC LM358D	
IC656	8-759-998-96	IC LM324D	

< COIL >

Ref. No.	Part No.	Description	Remark
L401	1-410-391-11	INDUCTOR, CHIP 68uH	
L502	1-412-058-11	INDUCTOR, CHIP 10uH	
L503	1-412-062-11	INDUCTOR, CHIP 47uH	

< TRANSISTOR >

Ref. No.	Part No.	Description	Remark
Q301	8-729-905-23	TRANSISTOR 2SA1576-R	
Q302	8-729-905-23	TRANSISTOR 2SA1576-R	
Q303	8-729-402-84	TRANSISTOR XN4601	
Q401	8-729-402-84	TRANSISTOR XN4601	
Q402	8-729-402-84	TRANSISTOR XN4601	
Q403	8-729-905-23	TRANSISTOR 2SA1576-R	
Q404	8-729-905-35	TRANSISTOR 2SC4081-R	
Q502	8-729-420-50	TRANSISTOR UN5215	
Q504	8-729-403-10	TRANSISTOR XN6215	
Q505	8-729-403-10	TRANSISTOR XN6215	
Q506	8-729-420-07	TRANSISTOR XN6213	
Q507	8-729-420-50	TRANSISTOR UN5215	
Q508	8-729-402-78	TRANSISTOR XN6401	
Q509	8-729-403-10	TRANSISTOR XN6215	
Q510	8-729-905-35	TRANSISTOR 2SC4081-R	
Q513	8-729-402-84	TRANSISTOR XN4601	
Q514	8-729-905-35	TRANSISTOR 2SC4081-R	
Q515	8-729-402-84	TRANSISTOR XN4601	
Q516	8-729-905-35	TRANSISTOR 2SC4081-R	
Q651	8-729-905-23	TRANSISTOR 2SA1576-R	
Q653	8-729-106-60	TRANSISTOR 2SB1115A	
Q654	8-729-905-35	TRANSISTOR 2SC4081-R	
Q655	8-729-905-35	TRANSISTOR 2SC4081-R	
Q656	8-729-905-35	TRANSISTOR 2SC4081-R	
Q657	8-729-402-84	TRANSISTOR XN4601	
Q658	8-729-402-84	TRANSISTOR XN4601	
Q659	8-729-821-88	TRANSISTOR 2SK1332-3	

< RESISTOR >

Ref. No.	Part No.	Description	Remark
R302	1-216-820-11	METAL CHIP 820 5% 1/16W	
R304	1-216-821-11	METAL CHIP 1K 5% 1/16W	
R307	1-216-829-11	METAL CHIP 4.7K 5% 1/16W	
R310	1-216-825-11	METAL CHIP 2.2K 5% 1/16W	
R311	1-216-821-11	METAL CHIP 1K 5% 1/16W	
R312	1-216-836-11	METAL CHIP 18K 5% 1/16W	
R313	1-216-837-11	METAL CHIP 22K 5% 1/16W	
R314	1-216-864-11	METAL CHIP 0	
R316	1-216-839-11	METAL CHIP 33K 5% 1/16W	
R317	1-216-836-11	METAL CHIP 18K 5% 1/16W	
R318	1-216-833-11	METAL CHIP 10K 5% 1/16W	
R321	1-216-833-11	METAL CHIP 10K 5% 1/16W	
R322	1-216-825-11	METAL CHIP 2.2K 5% 1/16W	
R325	1-216-829-11	METAL CHIP 4.7K 5% 1/16W	
R328	1-216-864-11	METAL CHIP 0	
R329	1-216-864-11	METAL CHIP 0	
R402	1-216-833-11	METAL CHIP 10K 5% 1/16W	
R406	1-216-864-11	METAL CHIP 0	
R407	1-216-821-11	METAL CHIP 1K 5% 1/16W	
R410	1-216-864-11	METAL CHIP 0	
R414	1-216-864-11	METAL CHIP 0	

Ref. No.	Part No.	Description			Remark
R415	1-216-820-11	METAL CHIP	820	5%	1/16W
R416	1-216-817-11	METAL CHIP	470	5%	1/16W
R417	1-216-833-11	METAL CHIP	10K	5%	1/16W
R418	1-216-833-11	METAL CHIP	10K	5%	1/16W
R419	1-216-825-11	METAL CHIP	2.2K	5%	1/16W
R420	1-216-825-11	METAL CHIP	2.2K	5%	1/16W
R421	1-216-821-11	METAL CHIP	1K	5%	1/16W
R422	1-216-837-11	METAL CHIP	22K	5%	1/16W
R427	1-216-841-11	METAL CHIP	47K	5%	1/16W
R428	1-216-835-11	METAL CHIP	15K	5%	1/16W
R429	1-216-839-11	METAL CHIP	33K	5%	1/16W
R432	1-216-839-11	METAL CHIP	33K	5%	1/16W
R435	1-216-833-11	METAL CHIP	10K	5%	1/16W
R437	1-216-825-11	METAL CHIP	2.2K	5%	1/16W
R440	1-216-864-11	METAL CHIP	0		
R501	1-216-837-11	METAL CHIP	22K	5%	1/16W
R502	1-216-837-11	METAL CHIP	22K	5%	1/16W
R503	1-216-833-11	METAL CHIP	10K	5%	1/16W
R504	1-216-833-11	METAL CHIP	10K	5%	1/16W
R505	1-216-841-11	METAL CHIP	47K	5%	1/16W
R508	1-216-833-11	METAL CHIP	10K	5%	1/16W
R509	1-216-833-11	METAL CHIP	10K	5%	1/16W
R510	1-216-833-11	METAL CHIP	10K	5%	1/16W
R511	1-216-833-11	METAL CHIP	10K	5%	1/16W
R513	1-216-845-11	METAL CHIP	100K	5%	1/16W
R514	1-216-833-11	METAL CHIP	10K	5%	1/16W
R515	1-216-857-11	METAL CHIP	1M	5%	1/16W
R517	1-216-833-11	METAL CHIP	10K	5%	1/16W
R518	1-216-833-11	METAL CHIP	10K	5%	1/16W
R519	1-216-833-11	METAL CHIP	10K	5%	1/16W
R521	1-216-833-11	METAL CHIP	10K	5%	1/16W
R522	1-216-833-11	METAL CHIP	10K	5%	1/16W
R523	1-216-840-11	METAL CHIP	39K	5%	1/16W
R524	1-216-833-11	METAL CHIP	10K	5%	1/16W
R525	1-216-833-11	METAL CHIP	10K	5%	1/16W
R526	1-216-847-11	METAL CHIP	150K	5%	1/16W
R527	1-216-845-11	METAL CHIP	100K	5%	1/16W
R528	1-216-833-11	METAL CHIP	10K	5%	1/16W
R529	1-216-845-11	METAL CHIP	100K	5%	1/16W
R530	1-216-845-11	METAL CHIP	100K	5%	1/16W
R531	1-216-833-11	METAL CHIP	10K	5%	1/16W
R532	1-216-833-11	METAL CHIP	10K	5%	1/16W
R533	1-216-833-11	METAL CHIP	10K	5%	1/16W
R534	1-216-837-11	METAL CHIP	22K	5%	1/16W
R535	1-216-825-11	METAL CHIP	2.2K	5%	1/16W
R536	1-216-823-11	METAL CHIP	1.5K	5%	1/16W
R537	1-216-845-11	METAL CHIP	100K	5%	1/16W
R546	1-216-829-11	METAL CHIP	4.7K	5%	1/16W
R547	1-216-829-11	METAL CHIP	4.7K	5%	1/16W

Ref. No.	Part No.	Description			Remark
R550	1-216-833-11	METAL CHIP	10K	5%	1/16W
R551	1-216-833-11	METAL CHIP	10K	5%	1/16W
R552	1-216-833-11	METAL CHIP	10K	5%	1/16W
R553	1-216-685-11	METAL CHIP	27K	0.5%	1/10W
R554	1-216-842-11	METAL CHIP	56K	5%	1/16W
R555	1-216-691-11	METAL CHIP	47K	0.5%	1/10W
R556	1-216-833-11	METAL CHIP	10K	5%	1/16W
R557	1-216-844-11	METAL CHIP	82K	5%	1/16W
R560	1-216-833-11	METAL CHIP	10K	5%	1/16W
R562	1-216-833-11	METAL CHIP	10K	5%	1/16W
R645	1-216-839-11	METAL CHIP	33K	5%	1/16W
R646	1-216-841-11	METAL CHIP	47K	5%	1/16W
R647	1-216-832-11	METAL CHIP	8.2K	5%	1/16W
R648	1-216-827-11	METAL CHIP	3.3K	5%	1/16W
R649	1-216-309-00	METAL CHIP	5.6	5%	1/10W
R650	1-216-833-11	METAL CHIP	10K	5%	1/16W
R652	1-216-835-11	METAL CHIP	15K	5%	1/16W
R653	1-216-835-11	METAL CHIP	15K	5%	1/16W
R654	1-216-843-11	METAL CHIP	68K	5%	1/16W
R655	1-216-834-11	METAL CHIP	12K	5%	1/16W
R656	1-216-134-00	METAL CHIP	2.2	5%	1/8W
R659	1-216-821-11	METAL CHIP	1K	5%	1/16W
R660	1-216-836-11	METAL CHIP	18K	5%	1/16W
R661	1-216-821-11	METAL CHIP	1K	5%	1/16W
R662	1-216-815-11	METAL CHIP	330	5%	1/16W
R664	1-216-821-11	METAL CHIP	1K	5%	1/16W
R665	1-216-821-11	METAL CHIP	1K	5%	1/16W
R666	1-216-839-11	METAL CHIP	33K	5%	1/16W
R667	1-216-839-11	METAL CHIP	33K	5%	1/16W
R668	1-216-833-11	METAL CHIP	10K	5%	1/16W
R669	1-216-841-11	METAL CHIP	47K	5%	1/16W
R670	1-216-807-11	METAL CHIP	68	5%	1/16W
R671	1-216-848-11	METAL CHIP	180K	5%	1/16W
R672	1-216-848-11	METAL CHIP	180K	5%	1/16W
R673	1-216-830-11	METAL CHIP	5.6K	5%	1/16W
R674	1-216-840-11	METAL CHIP	39K	5%	1/16W
R675	1-216-830-11	METAL CHIP	5.6K	5%	1/16W
R676	1-216-830-11	METAL CHIP	5.6K	5%	1/16W
R677	1-216-844-11	METAL CHIP	82K	5%	1/16W
R679	1-216-837-11	METAL CHIP	22K	5%	1/16W
R680	1-216-833-11	METAL CHIP	10K	5%	1/16W
R681	1-216-817-11	METAL CHIP	470	5%	1/16W
R682	1-216-833-11	METAL CHIP	10K	5%	1/16W
R683	1-216-857-11	METAL CHIP	1M	5%	1/16W
R684	1-216-823-11	METAL CHIP	1.5K	5%	1/16W
R685	1-216-848-11	METAL CHIP	180K	5%	1/16W
R686	1-216-830-11	METAL CHIP	5.6K	5%	1/16W
R687	1-216-833-11	METAL CHIP	10K	5%	1/16W
R688	1-216-841-11	METAL CHIP	47K	5%	1/16W

Ref. No.	Part No.	Description	Remark
R689	1-216-843-11	METAL CHIP 68K 5%	1/16W
R690	1-216-839-11	METAL CHIP 33K 5%	1/16W
R694	1-216-848-11	METAL CHIP 180K 5%	1/16W
R698	1-216-837-11	METAL CHIP 22K 5%	1/16W
R699	1-216-827-11	METAL CHIP 3.3K 5%	1/16W
R700	1-216-855-11	METAL CHIP 680K 5%	1/16W
R702	1-216-681-11	METAL CHIP 18K 0.5%	1/10W
R703	1-216-677-11	METAL CHIP 12K 0.5%	1/10W

< CRYSTAL >

Ref. No.	Part No.	Description	Remark
X501	1-578-689-21	VIBRATOR (8MHz)	

****

* A-7062-278-A VF-26 BOARD, COMPLETE
****
(Ref.No 6,000 Series)

< CAPACITOR >

Ref. No.	Part No.	Description	Remark
C901	1-126-369-11	ELECT 220uF 20% 6.3V	
C902	1-163-038-00	CERAMIC CHIP 0.1uF 25V	
C904	1-127-515-11	ELECT(SOLID) 47uF 20% 6.3V	
C905	1-163-009-11	CERAMIC CHIP 0.001uF 10% 50V	
C906	1-163-115-00	CERAMIC CHIP 82PF 5% 50V	
C907 ⚠	1-162-625-11	CERAMIC CHIP 0.0047uF 5% 50V	
C908 ⚠	1-164-182-11	CERAMIC CHIP 0.0033uF 10% 50V	
C909	1-126-193-11	ELECT 1uF 20% 50V	
C911	1-131-388-00	TANTALUM 68uF 10% 6.3V	
C912	1-102-038-00	CERAMIC 0.001uF	
C913	1-163-033-00	CERAMIC CHIP 0.022uF 50V	
C915	1-126-193-11	ELECT 1uF 20% 50V	
C916	1-163-037-11	CERAMIC CHIP 0.022uF 10% 25V	(TYPE 1)
C916	1-163-145-00	CERAMIC CHIP 0.0015uF 5% 50V	(TYPE 2)
C917	1-135-162-21	TANTALUM CHIP 33uF 20% 6.3V	(TYPE 2)
C917	1-135-166-21	TANTALUM CHIP 47uF 10% 10V	(TYPE 1)
C918	1-162-638-11	CERAMIC CHIP 1uF 16V	
C919	1-135-070-00	TANTALUM CHIP 0.1uF 10% 35V	
C920	1-164-232-11	CERAMIC CHIP 0.01uF 50V	

< CONNECTOR >

Ref. No.	Part No.	Description	Remark
CN901	* 1-566-195-11	PIN, CONNECTOR (PC BOARD) 2P	
CN902	* 1-566-195-11	PIN, CONNECTOR (PC BOARD) 2P	
CN904	1-575-570-21	CONNECTOR, FPC/FFC 6P	

< CONPOSITION CIRCUIT BLOCK >

Ref. No.	Part No.	Description	Remark
CP901	1-238-119-11	RES, ADJ	

< SOCKET >

Ref. No.	Part No.	Description	Remark
CRT901	1-526-978-21	SOCKET ASSY, CRT	

< DIODE >

Ref. No.	Part No.	Description	Remark
D670	8-719-404-46	DIODE MA110	
D903	8-719-400-20	DIODE MA152WA	
D955	8-719-404-19	DIODE LN1251C	

< IC >

Ref. No.	Part No.	Description	Remark
IC901	8-759-420-01	IC AN2512S (TYPE 1)	
IC901	8-759-511-01	IC BA7147F (TYPE 2)	

< COIL >

Ref. No.	Part No.	Description	Remark
L901	1-410-645-31	INDUCTOR 100uH	
L902	1-410-385-11	INDUCTOR CHIP 22uH	
L903 ⚠	1-459-858-11	COIL, FERRITE (HLC)	

< TRANSISTOR >

Ref. No.	Part No.	Description	Remark
Q903	8-729-106-68	TRANSISTOR 2SD1615	
Q904	8-729-216-31	TRANSISTOR 2SA1163G	

< RESISTOR >

Ref. No.	Part No.	Description	Remark
R902	1-216-051-00	METAL CHIP 1.2K 5% 1/10W	(TYPE 1)
R903	1-216-041-00	METAL CHIP 470 5% 1/10W	
R907	1-216-063-00	METAL CHIP 3.9K 5% 1/10W	
R908	1-216-063-00	METAL CHIP 3.9K 5% 1/10W	
R909	1-216-061-00	METAL CHIP 3.3K 5% 1/10W	
R911	1-216-079-00	METAL CHIP 18K 5% 1/10W	
R914	1-216-133-00	METAL CHIP 3.3M 5% 1/10W	
R915	1-216-133-00	METAL CHIP 3.3M 5% 1/10W	
R916	1-216-125-00	METAL CHIP 1.5M 5% 1/10W	
R917	1-216-121-00	METAL CHIP 1M 5% 1/10W	
R919	1-216-097-00	METAL CHIP 100K 5% 1/10W	
R920	1-216-111-00	METAL CHIP 390K 5% 1/10W	(TYPE 2)
R920	1-216-113-00	METAL CHIP 470K 5% 1/10W	(TYPE 1)
R921	1-216-011-00	METAL CHIP 27 5% 1/10W	(TYPE 2)
R921	1-216-013-00	METAL CHIP 33 5% 1/10W	(TYPE 1)
R922	1-216-055-00	METAL CHIP 1.8K 5% 1/10W	
R923	1-216-025-00	METAL CHIP 100 5% 1/10W	
R924	1-216-306-11	METAL CHIP 3.9 5% 1/10W	
R925	1-216-334-11	METAL GLAZE 22K 1% 1/10W	(TYPE 2)
R925	1-216-336-11	METAL CHIP 47K 1% 1/10W	(TYPE 1)
R926	1-216-107-00	METAL CHIP 270K 5% 1/10W	(TYPE 1)
R926	1-218-165-11	METAL GLAZE 220K 1% 1/10W	(TYPE 2)
R928	1-216-870-11	METAL CHIP 180K 1% 1/10W	
R929	1-216-053-00	METAL CHIP 1.5K 5% 1/10W	(TYPE 1)
R929	1-216-073-00	METAL CHIP 10K 5% 1/10W	(TYPE 2)
R930	1-216-089-00	METAL CHIP 47K 5% 1/10W	
R931	1-216-121-00	METAL CHIP 1M 5% 1/10W	(TYPE 1)
R950	1-216-041-00	METAL CHIP 470 5% 1/10W	
R951	1-216-295-00	METAL CHIP 0 5% 1/10W	

Note: The components identified by mark ⚠ or dotted line with mark ⚠ are critical for safety. Replace only with part number specified.

Ref. No.	Part No.	Description	Remark
		< VARIABLE RESISTOR >	
RV901	1-238-647-11	RES, ADJ, METAL GLAZE 4.7M	
		< TRANSFORMER >	
T901 ⚠	1-439-428-11	TRANSFORMER ASSY, FLYBACK	
		< THERMISTOR >	
TH901	1-807-938-11	THERMISTOR	

****

* A-7062-279-A VF-27 BOARD, COMPLETE
****
(Ref. No 7,000 Series)

Ref. No.	Part No.	Description				Remark
		< CAPACITOR >				
C901	1-124-442-00	ELECT	330uF	20%	6.3V	
C903	1-163-077-00	CERAMIC CHIP	0.1uF	10%	25V	
C904	1-126-160-11	ELECT	1uF	20%	50V	
C905	1-163-037-11	CERAMIC CHIP	0.022uF	10%	25V	
C906	1-131-381-00	TANTALUM	47uF	10%	10V	
C907	1-162-638-11	CERAMIC CHIP	1uF		16V	
C908	1-136-165-00	FILM	0.1uF	5%	50V	
C909	1-163-109-00	CERAMIC CHIP	47PF	5%	50V	
C910	1-124-587-11	ELECT	220uF	20%	6.3V	
C911	1-163-141-00	CERAMIC CHIP	0.001uF	5%	50V	
C912 ⚠	1-162-625-11	CERAMIC CHIP	0.0047uF	5%	50V	
C913 ⚠	1-162-625-11	CERAMIC CHIP	0.0047uF	5%	50V	
C914 ⚠	1-163-209-00	CERAMIC CHIP	0.0015uF	5%	50V	
C915	1-126-090-11	ELECT	82uF	20%	10V	
C916	1-126-163-11	ELECT	4.7uF	20%	50V	
C918	1-163-037-11	CERAMIC CHIP	0.022uF	10%	25V	
C919	1-102-038-00	CERAMIC	0.001uF			
		< CONNECTOR >				
CN902	* 1-566-195-11	PIN, CONNECTOR (PC BOARD) 2P				
CN903	* 1-566-195-11	PIN, CONNECTOR (PC BOARD) 2P				
CN904	1-575-570-21	CONNECTOR, FPC/FFC 6P				
		< DIODE >				
D903	8-719-400-20	DIODE MA152WA				
D955	8-719-404-19	DIODE LN1251C				
		< IC >				
IC901	8-759-420-01	IC AN2512S				
		< COIL >				
L901	1-410-831-21	INDUCTOR 82uH				
L902	1-408-977-21	INDUCTOR 39uH				
L903 ⚠	1-459-858-11	COIL, FERRITE (HLC)				
		< TRANSISTOR >				
Q903	8-729-216-31	TRANSISTOR 2SA1163				
Q904	8-729-100-66	TRANSISTOR 2SC1623				
Q905	8-729-106-68	TRANSISTOR 2SD1615				
		< RESISTOR >				
R903	1-216-041-00	METAL CHIP	470	5%	1/10W	
R905	1-216-007-00	METAL CHIP	18	5%	1/10W	
R906	1-216-121-00	METAL CHIP	1M	5%	1/10W	
R908	1-216-097-00	METAL CHIP	100K	5%	1/10W	
R909	1-216-113-00	METAL CHIP	470K	5%	1/10W	
R910	1-216-053-00	METAL CHIP	1.5K	5%	1/10W	
R911	1-216-013-00	METAL CHIP	33	5%	1/10W	
R912	1-216-691-11	METAL CHIP	47K	0.5%	1/10W	
R913	1-216-107-00	METAL CHIP	270K	5%	1/10W	
R914	1-216-025-00	METAL CHIP	100	5%	1/10W	
R915	1-216-306-11	METAL CHIP	3.9	5%	1/10W	
R917	1-216-045-00	METAL CHIP	680	5%	1/10W	
R918	1-216-069-00	METAL CHIP	6.8K	5%	1/10W	
R919	1-216-748-11	METAL CHIP	39K	5%	1/10W	
R920	1-216-748-11	METAL CHIP	39K	5%	1/10W	
R921	1-216-053-00	METAL CHIP	1.5K	5%	1/10W	
R922	1-216-101-00	METAL CHIP	150K	5%	1/10W	
R923	1-216-121-00	METAL CHIP	1M	5%	1/10W	
R924	1-216-131-11	METAL CHIP	2.7M	5%	1/10W	
R925	1-216-131-11	METAL CHIP	2.7M	5%	1/10W	
R926	1-216-055-00	METAL CHIP	1.8K	5%	1/10W	
R928	1-216-051-00	METAL CHIP	1.2K	5%	1/10W	
R933	1-216-121-00	METAL CHIP	1M	5%	1/10W	
R950	1-216-041-00	METAL CHIP	470	5%	1/10W	
		< VARIABLE RESISTOR >				
RV901	1-230-873-11	RES, ADJ, METAL 47K				
RV902	1-230-866-11	RES, ADJ, METAL 470				
RV903	1-230-869-11	RES, ADJ, METAL 4.7K				
RV904	1-228-762-00	RES, ADJ, METAL GLAZE 1M				
		< TRANSFORMER >				
T901 ⚠	1-439-431-11	TRANSFORMER ASSY, FLYBACK				
		< THERMISTOR >				
TH901	1-807-938-11	THERMISTOR				

Note: The components identified by mark ⚠ or dotted line with mark ⚠ are critical for safety. Replace only with part number specified.

Ref. No.	Part No.	Description	Remark
		< SOCKET >	
W901	1-540-019-21	SOCKET ASSY, CRT	

****

Ref. No.	Part No.	Description	Remark
*	A-7071-381-A	VK-14 BOARD, COMPLETE (AEP/UK)	
		**********************	
*	A-7071-444-A	VK-14 BOARD, COMPLETE (E)	
		**********************	
		(Ref.No 5,000 Series)	
		< DIODE >	
D508	8-719-420-33	DIODE MA151K	
D509	8-719-940-45	DIODE DWA010	
D523	8-719-977-34	DIODE DTZ12	
D524	8-719-977-34	DIODE DTZ12	
D526	8-719-977-34	DIODE DTZ12	
D527	8-719-977-34	DIODE DTZ12	
D530	8-719-404-46	DIODE MA110	
		< RESISTOR >	
R502	1-216-029-00	METAL CHIP 150 5% 1/10W	
		< SWITCH >	
S500	1-571-787-11	SWITCH, TACTILE (REW)	
S503	1-571-787-11	SWITCH, TACTILE (FF)	
S504	1-571-787-11	SWITCH, TACTILE (STOP)	
S505	1-571-787-11	SWITCH, TACTILE (PAUSE)	
S506	1-571-787-11	SWITCH, TACTILE (TIME (NEXT))	
S507	1-571-787-11	SWITCH, TACTILE (DATE (+))	
S508	1-571-787-11	SWITCH, TACTILE (DATA SCREEN)	
S509	1-571-787-11	SWITCH, TACTILE (AGE/EVENT)	
S510	1-572-284-11	SWITCH, SLIDE (REC) (E)	
S511	1-570-870-11	SWITCH, SLIDE (REC MODE, EDIT)	
S512	1-571-787-11	SWITCH, TACTIL (FRAME)	
S513	1-571-787-11	SWITCH, TACTILE (SLOW)	
S514	1-572-283-11	SWITCH, SLIDE (POWER)	
S515	1-571-787-11	SWITCH, TACTILE (ZERO MEM)	
S516	1-571-787-11	SWITCH, TACTILE (COUNTER RESET)	
S520	1-571-787-11	SWITCH, TACTILE (PB)	
S521	1-570-870-11	SWITCH, SLIDE (BEEP)	
		< FLEXIBLE BOARD >	
W550	1-633-983-11	FP-296 FLEXIBLE BOARD	
W551	1-633-980-11	FP-308 FLEXIBLE BOARD	

****

Ref. No.	Part No.	Description	Remark
		MISCELLANEOUS	
		*************	
	1-569-286-11	CONNECTOR, CARD EDGE 5P (on the FP-249)	
71	1-542-125-21	MICROPHONE (C-2027)	
163	1-808-505-12	SENSOR (DEW)	
318	8-741-509-51	IC SBX1509-51 (HIC RP-77 BOARD, COMPLETE)	
322	1-569-347-11	CONNECTOR, FPC (TRANSLATION) 13P	
353	1-547-381-12	FILTER BLOCK, OPTICAL	
364 ⚠	1-466-230-21	CONVERTER UNIT, D/D	
401	1-547-422-11	LENS, ZOOM (VCL-8508XE)	
451	1-547-412-15	LENS, ZOOM (VCL-8508XF)	
BZ901	1-529-096-12	BUZZER, PIEZOELECTRIC	
IC101	8-752-604-72	IC ICX039AN-2 (CCD IMAGER) (Note 1)	
L901 ⚠	1-451-310-21	DEFLECTION YOKE (B/W) (B TYPE)	
M902	8-835-331-01	MOTOR, DC U-22A (CAPSTAN)	
M903	A-7040-208-A	MOTOR ASSY, THREADING (LOADING)	
S901	1-572-286-11	SWITCH, PUSH	
S903	1-571-099-11	SWITCH	
V901-1 ⚠	1-546-085-11	CATHODE-RAY TUBE, B/W (B TYPE)	
V901-2 ⚠	1-452-482-11	CRT ASSY (M91JYZ60WB) (A TYPE)	

****

Ref. No.	Part No.	Description	Remark
		ACCESSORY & PACKING MATERIAL	
		****************************	
	A-6767-706-A	RFU ADAPTOR (RFU-89EA) (E)	
	A-6767-707-A	RFU ADAPTOR (RFU-89EA) (UK)	
	A-6768-254-A	RFU ADAPTOR (RFU-90E) (AEP)	
	1-465-395-41	COMMANDER, REMOTE (RMT-502) (E)	
	1-465-395-81	COMMANDER, REMOTE (RMT-502) (AEP/UK)	
	1-571-164-11	SWITCH, ANTENNA CHANGE (CABLE) (UK/E)	
*	3-340-514-01	BAG, PROTECTION	
	3-712-673-01	SCREWDRIVER (UK/E)	
*	3-741-532-01	CUSHION, ACC	
*	3-744-867-01	CUSHION (UPPER)	
*	3-744-868-01	CUSHION (LOWER)	
*	3-744-971-51	INDIVIDUAL CARTON	
	3-752-999-11	MANUAL, INSTRUCTION (ENGLISH) (AEP/UK)	
	3-752-999-41	MANUAL, INSTRUCTION (FRENCH/GERMAN/SPANISH) (AEP)	
	3-752-999-51	MANUAL, INSTRUCTION (DUTCH/SWEDISH/ITALIAN) (AEP)	
	3-753-494-11	MANUAL, INSTRUCTION (ENGLISH) (E)	
	3-753-494-41	MANUAL, INSTRUCTION (FRENCH/GERMAN/SPANISH) (E)	
	3-753-494-51	MANUAL, INSTRUCTION (ARABIC) (E)	
	3-753-494-61	MANUAL, INSTRUCTION (CHINESE) (E)	
*	3-764-631-12	INSTRUCTION, DEW CONDENSATION (AEP/E)	
	3-941-737-01	BELT, SHOULDER	

Note 1) For replacement of CCD imager, CD-65 board, complete and DT-77 board, complete read carefully the CAUTIONS FOR REPLACEMENT OF CCD IMAGER on page 93.

Note: The components identified by mark ⚠ or dotted line with mark ⚠ are critical for safety. Replace only with part number specified.

Ref. No.	Part No.	Description	Remark
**	AC-V60A	AC POWER ADPTOR	
***	NP-66	BATTERY PACK	

Note

** MARK PARTS IS AVAILABLE FOR REPAIR SERVICE.
*** MARK PARTS IS AVAILABLE AS AN OPTIONAL ACCESSORY.

****

HARDWARE LIST

****

# 1	7-621-281-15	SCREW +P 2X2
# 2	7-627-553-48	PRECISION SCREW +P 2X4 TYPE 3
# 3	7-627-553-68	SCREW, PRECISION +P 2X6 TYPE3
# 4	7-671-155-01	STEEL BALL 3.0
# 5	7-627-555-88	SCREW (M1.4X1.8)
# 6	7-627-553-37	SCREW (M2X3), SPECIAL HEAD

****

SECTION 7
SERVICE MODE

☆This unit adopts the camera adjustment and the EVR (Electronic Variable resistor) with the SENSER LANC system.

7-1. SENSER LANC

SENSER LANC is the LANC format to adjust the EVR (Electronic Variable resistor) of Video 8 Handycam and to perform tests by using the LANC (control L). This word stands for the same as the SERVICE LANC formerly used, however, the unified word "SENSER LANC" will be used with this substantial functions.

7-1-1. How to Use RM-95 jig (remote control for adjustment)

RM-95 jig is used to operate the SENSER LANC. HOLD switch of this jig is remodelled for service to get the SENSER LANC mode. Replacing microcomputer in RM-95 is required for the old-model RM-95 jig, which has no page display function.

Old model	μPD7503G-A71-12 μPD7503G-C23-12	8-759-142-56 8-759-146-77	Page is not displayed (Replacing microcomputer is required)
New model	μPD7503G-C56-12	8-759-148-35	Page is displayed

LCD display of RM-95

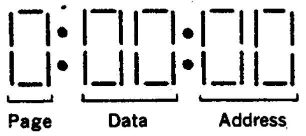

⇨ Example

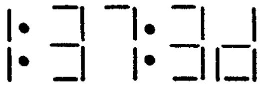

This means that the page 1 and address 3D is data of 37.

• Reference between Data and Bit

When the data is 37 ⇨ Bit

	3				7		
7	6	5	4	3	2	1	0
0	0	1	1	0	1	1	1

Page	Address	Bit 7	Bit 6	Bit 5	Bit 4	Bit 3	Bit 2	Bit 1	Bit 0
1	3D	MP-HG		ME/MP	REC PROOF	V MUTE	A MUTE	JOG	VA PB MODE
		0	0	1	1	0	1	1	1

The data in the above list means as follows:

ME SW ....ON
REC PROOF SW ....ON
AUDIO MUTE ......ON
JOG..................ON
VA PB MODE........ON

7-1-2. Tansfer method of the service mode with RM-95

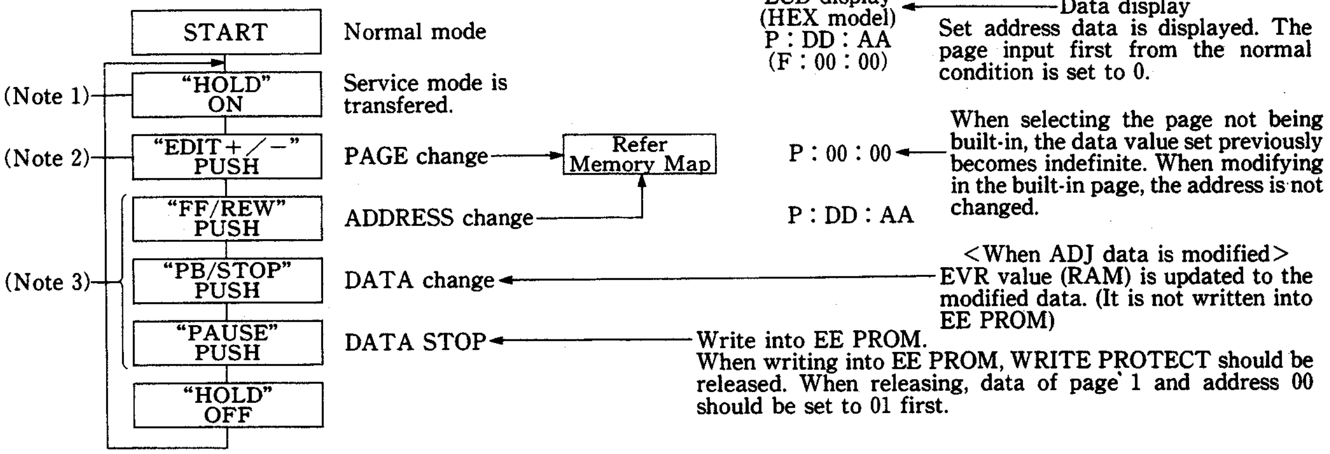

Command name	Command function	Function Button with RM-95
Page Up	Page+ 1	Edit Search+
Page Down	Page− 1	Edit Search−
Direct Page Set	Set to direct page	Event Clear
Address Up	Address+1	Fast Forward
Address Down	Address−1	Rewind
Data Up	Data+ 1	Play Back
Data Down	Data−1	Stop
Store	Write data into EEPROM, RAM	Pause

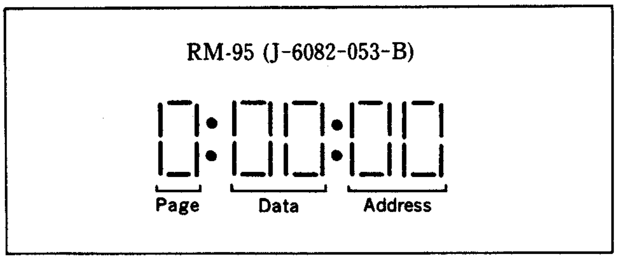

RM-95 (J-6082-053-B)

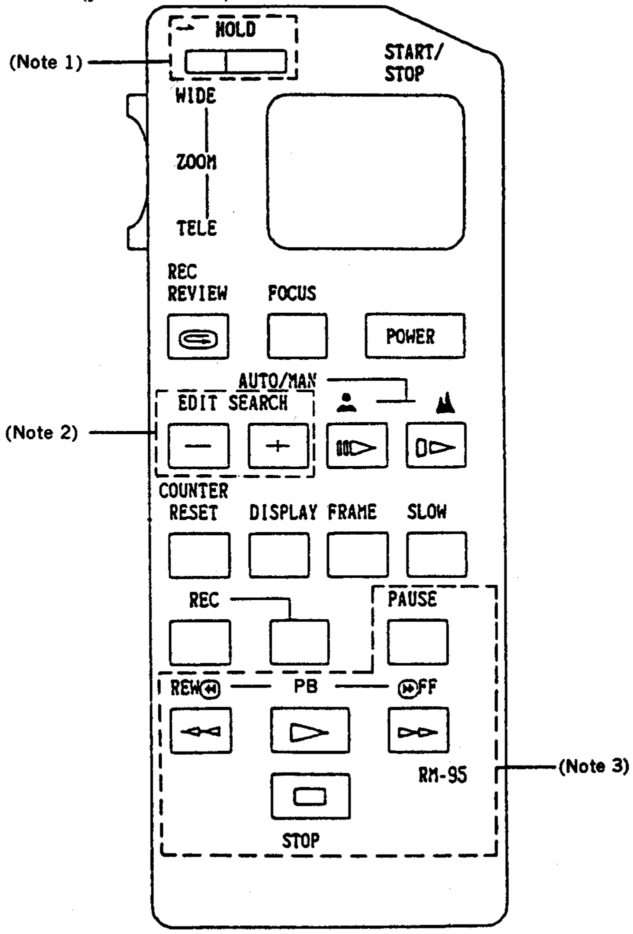

7-1-3. SENSER LANC Memory Map

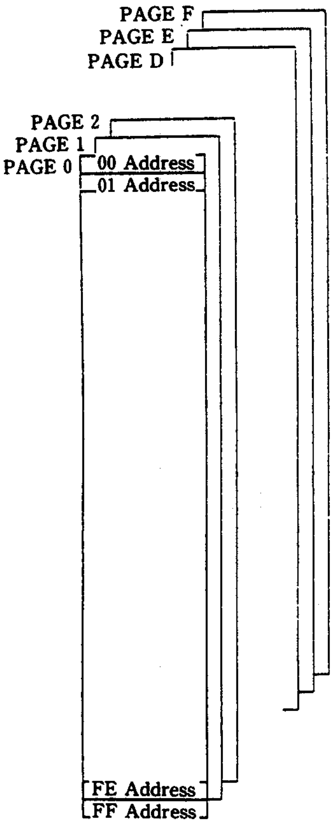

PAGE	Page allocation	Description
0	Service	
1	Mode Control RAM	RAM and I/O interface data memory area required for operating the mode controller. Data is not held when the power is turned off because this area is not ROM.
2	Mode Control I/O	
3	Mechanical Control RAM	RAM and I/O memory area of the mechanical controller.
4	Mode Control I/O	
5	Camera microcompuler RAM	RAM and I/O memory area of the camera micro controller.
6	Camera microcompuler I/O	
7	Spare	
8	Spare	
9	Spare	
A	Spare	
B	Spare	
C	Spare	
D	VTR EE-PROM	ROM memory area of the VTR part. Data of this area is held by EE-PROM when the power is tuned off. Releasing protect is required for changing data.
E	Camera EE-PROM2	ROM memory area of the camera part. Data of this area is held by EE•P•ROM when the power is tuned off.
F	Camera EE-PROM1	

Note) There are 16 types of page from 0~F. The allocation of page is as the above list. Only the memory of page D, E and F is not erased when the power is turned off as the EVR (Electronic Variable resistor).

7-1-4. Types of Self-diagnostic Feature

This unit has ADJUST mode and TEST mode as follows:

MODE		Contents
ADJUST	Camera adjustment	Refer to Camera Adjustment
	Switching position adjustment	Refer to each adjustment page
	Battery DOWN adjustment	
TEST	Pass adjustment track shift	When adjusting tape pass, set this mode and shift the tracking.
	Emergency STOP inhibition	Detection of emergency is inhibited. This allows the following items. • Power is not turned off when the battery is ended. • SP/LP is not automatically distinguished. • Emergency is not detected except for TOP/END detection of the TAPE.
	Read of emergency code	The following functions are added to the emergency display function currently in use. ①The lithium battery is not required because to memorize into EE-PROM is allowed. ②The first emergency and the last emergency are memorized. ③The mode when the emergency is generated is memorized, in addition to the emergency contents.
	Motor single check	Rotating in right direction, inverting, stopping of each motor can be separately controlled. • Drum motor • Capstan motor • Loading motor
	Function switch check	The acceptance of the function switch of the unit can be confirmed by designating an address. On the contrary, RM-95 can command the substitution for the function switch of the unit.
	Mechanical switch check	The contents of the mechanical switch and the mode switch can be confirmed.
	Sensor check	The following sensor is input by performing A/D selecting, and the A/D selecting value can be confirmed. TOP sensor, End sensor, S REEL FG, T REEL FG, Thermistor for SWP correction, DEW sensor
	Reception contents check of wireless remote control	The received code contents of the remote control code can be confirmed.

7-1-5. How to use practically

How to use:

How to set the adjustment mode and the TEST mode

Set RM-95 to the service mode. (HOLD SW "ON")

How to change and write data

Press the PAUSE button of RM-95. Pressing PAUSE button is not required for some RAM and I/O area.

Change and write data of EE-PROM

Removing PROTECT is required. The PROTECT is removed by setting as follows:

PAGE 1	Address 00	Data 01

But CAMERA system don't need release, because don't set PROTECT.

How to release each mode

Releasing from EE-PROM area	Be sure to return the data of PAGE 1 address 00 to 00 from 01, and then turn off the service mode of RM-95.
Releasing from RAM and I/O area	Turn off the service mode or turn off the power, because hoding of data is not required.

- In order to perform the pass track shift......Refer to page 195.
- In order to inhibit the emergency detection......Refer to the list in page 236.
- In order to check the emergency code......Refer to page 237.
- In order to operate the motor singly......Refer to page 240.
- In order to check the function switch......Refer to page 239.
- In order to check the mechanical switch......Refer to page 238.
- In order to read the A/D selecting value......Refer to page 240.
- In order to check the reception contents of the wireless remote control......Refer to page 240.

SECTION 8
MECHANICAL ADJUSTMENTS

For Mechanical Adjustments
Refer to mechanical adjustment (8 mm Video MECHANICAL ADJUSTMENT MANUAL III) manual for the adjustments and checks of mechanism section and the mechanical parts replacement. (9-972-732-11)
For setting of the track shift mode, however, refer to the following.

8-1. SETTING THE TRACK SHIFT MODE

Note: Camera part and video part should have been installed.

[Setting Method]

1) Set the adjustment commander to the HOLD ON side.
2) Press EDIT SEARCH + button once, and select page 1.
3) Select the adjustment address 4D with FF or REW button.
4) Set to 3X with PLAY and STOP button. (Setting of track shift mode)

Note: 3X should be the number from 31 to 3F. (To display "3X" with PLAY and STOP button is simple to shift.)
(When HOLD OFF once after the setting and HOLD ON again, the display of the address data will be changed. To set the another mode with shifting, repeat the procedures from 3).)

5) Set to the HOLD OFF side in order to set the normal mode.

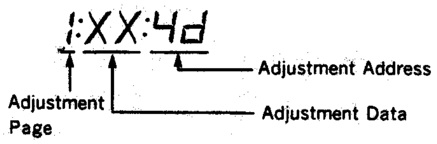

(1X : TEST 1
2X : TEST 2 ('CH Playback)
3X : TEST 3 (Shift mode)
4X : Shift release)

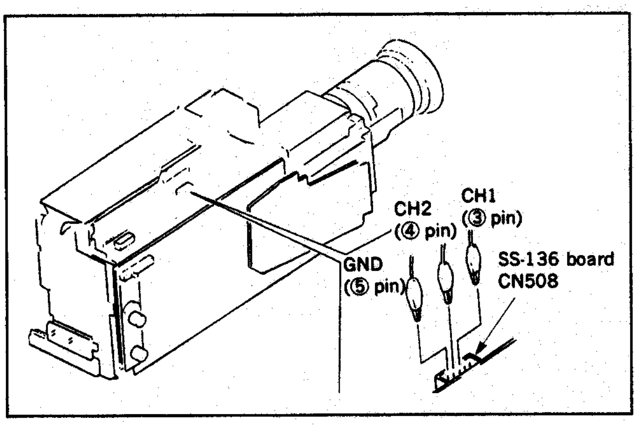

Fig. 8-1.

8-2. PREPARATION FOR ADJUSTMENT

1) Clean the tape running surfaces (tape guide, drum, capstan shaft, pinch roller.)
2) Connect to the oscilloscope.
   CH1 : SS-136 board CN508 pin ③ (PB RF)
   CH2 : SS-136 board CN508 pin ④ (SWP)
3) Play back the tracking alignment tape (WR5-1CP) (8-967-995-07).
4) Check that the RF waveform of the oscilloscope is flat at both inlet and outlet sides. When not flat, make adjustment as follows. (Refer to Figs. 8-1 and 8-2.)

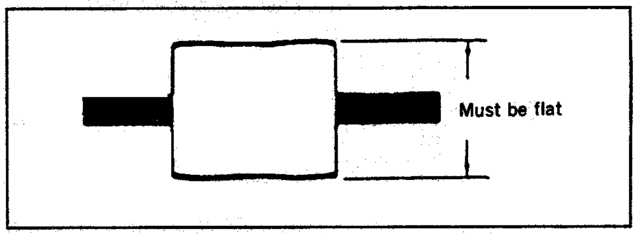

Fig. 8-2.

SECTION 9
CAMERA ADJUSTMENTS

PREPARATION FOR ADJUSTMENT (CAMERA BLOCK)
9-1. LIST OF SERVICING JIGS

- Oscilloscope • Stabilized power supply (2 units) • Adjusting screwdriver • L lench • Stop watch
- Color monitor TV • Vectorscope • Desk-top calculator

Ref. No.	Name	Part No.	Use
J-1	Filter (C14)	J-6080-054-A	Auto white balance adjustment
J-2	ND filter 0.1	J-6080-807-A	
	ND filter 0.3	J-6080-818-A	
	ND filter 0.4	J-6080-806-A	
	ND filter 0.9	J-6080-833-A	
	ND filter 1.0	J-6080-808-A	
J-3	Pattern box PTB-500	J-6029-140-A	
J-4	Color bar chart for pattern box	J-6020-250-A	
J-5	Extension cable (5P)	J-6082-043-A	To connect VC-99 board CN304 and DC-DC converter
	Extension cable (4P)	J-6082-042-A	To connect VC-99 board CN307 and VA-67 board W701
J-6	Extension cable (20P)	J-6082-063-B	To connect VA-67 board CN703 and CT-38 board CN705
J-7	Extension cable (12P)	J-6082-056-A	To connect VC-99 board CN305 and VA-67 board W702
J-8	Camera fixing jig	J-6080-894-A	
J-9	Siemens-star chart Transmission type simens-star chart	J-6080-875-A J-6080-923-A	Either of the siemens-star charts which appear during adjustment may be used.
J-10	Adjustment remote control * 1	J-6082-053-B	
J-11	AF microcomputer data reader jig * 2	J-6082-025-A	
J-12	CPA connector jig	J-6082-109-A	

* 1 Microcomputer IC in the adjustment Remote controller except for μPD7503G-C56-12 (8-759-148-35) does not allow the page selecting. Replace the microcomputer in such a case.
* 2 Change the fixed number of R1 from 10kΩ to 100kΩ in the AF microcomputer data reading jig. (If the number is kept to 10kΩ, the adjustment data can not change because of the difference of of the impedance.)
When adjustment the old-model Handy Cam, 100kΩ is allowed to perform the adustment.

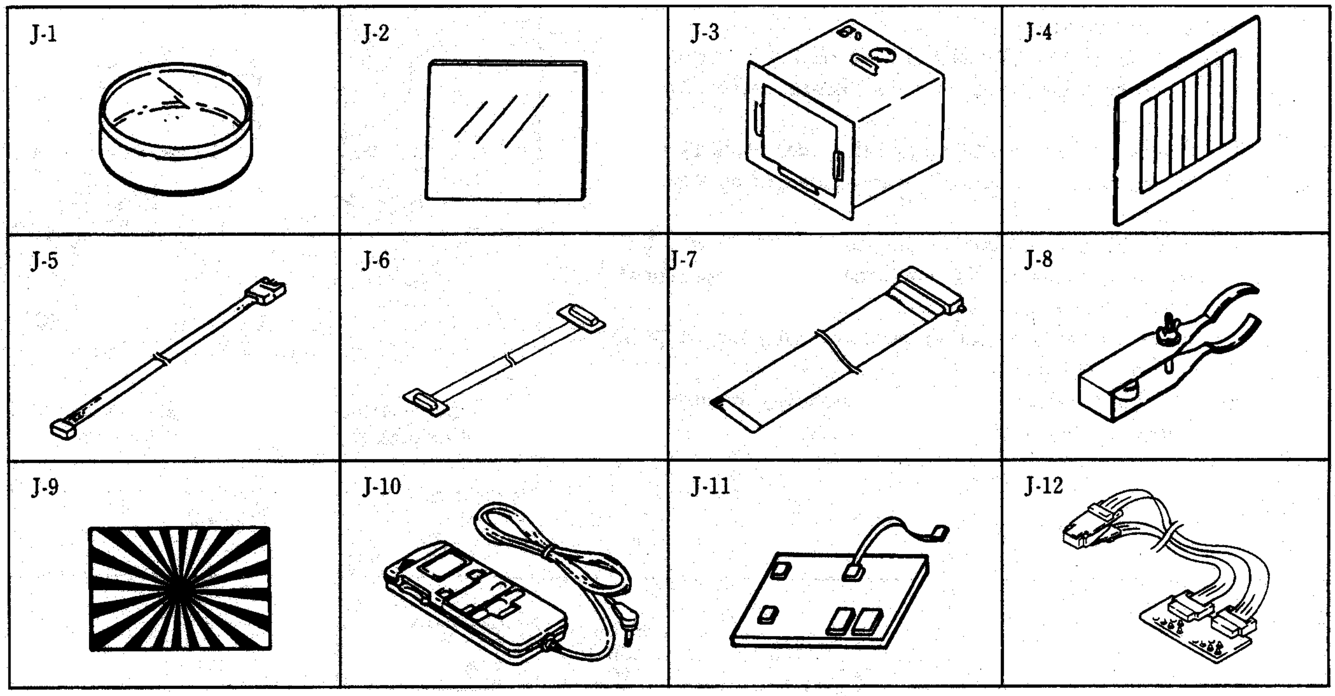

Fig. 9-1.

9-2. PREPARATION FOR ADJUSTMENT

9-2-1. Preparation

Note: Refer to "SECTION 2. DISASSEMBLY" for details of the cabinet and individual boards removal procedure.

1) Connect the camera block and the video block by using the extension cable, and other equipment as shown in Fig. 9-3.
2) EVF (Electrical View Finder) section VF-26 or VF-27 boards is necessary for confirmation of shutter speed, white balance mode and etc.
   If not necessary, it can removed by taking out CN931 on the SW-183 board.
3) MIC board (MC-76 board) is not necessary. Remove it by taking out W651 on the MC-76 board.

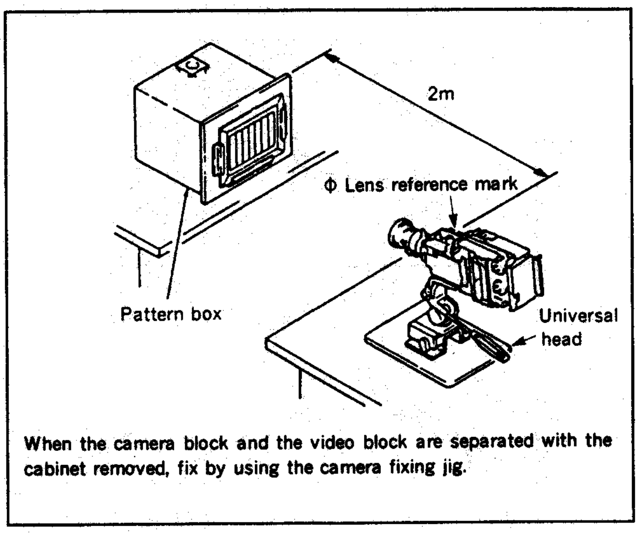

When the camera block and the video block are separated with the cabinet removed, fix by using the camera fixing jig.

Fig. 9-2.

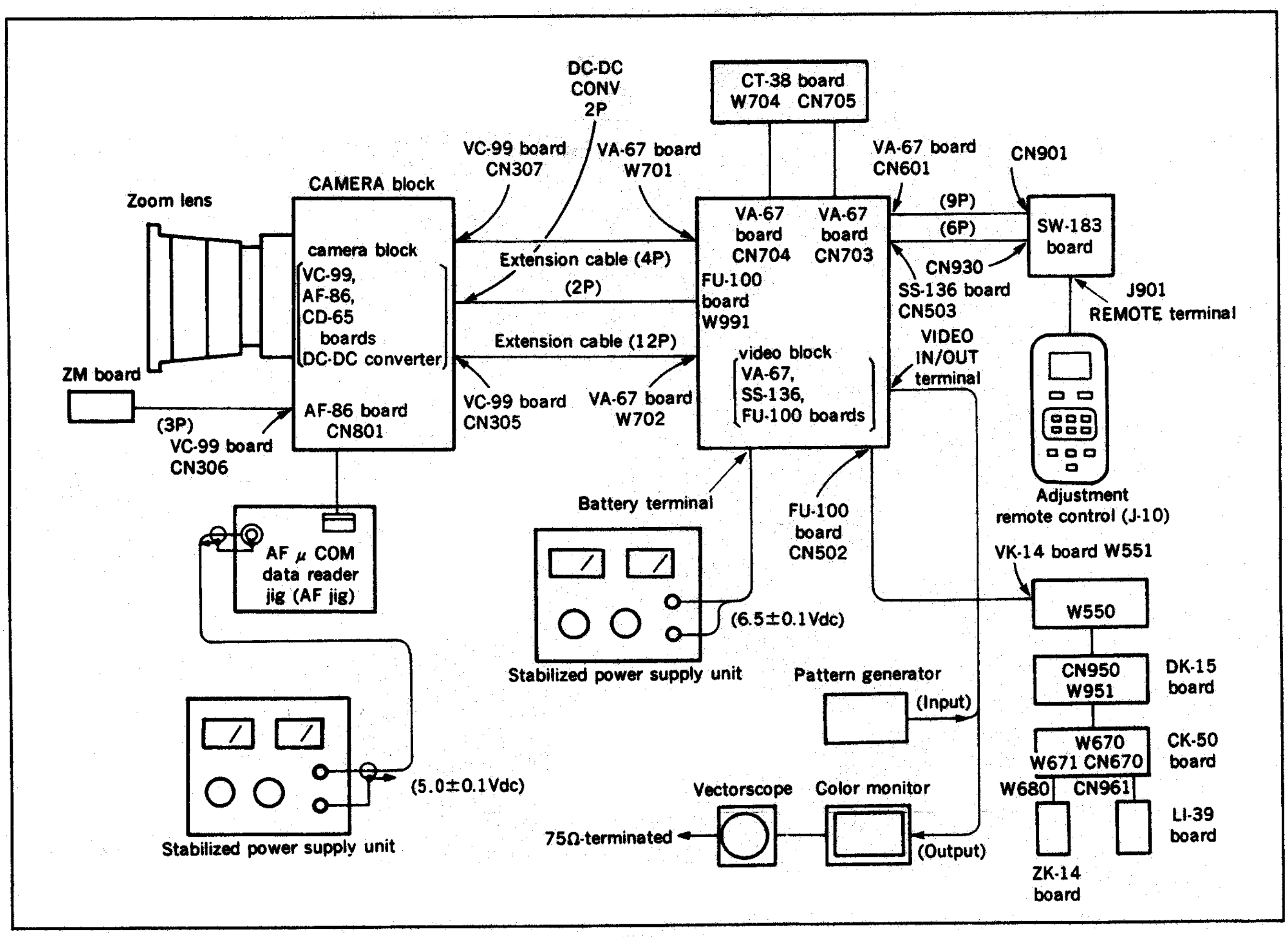

Fig. 9-3.

9-2-2. Caution

1) Setting of switches
Unless otherwise specified, set the switches to the following position for making adjustments.
   1. AUTO LOCK switch
      ......Lock release position
   2. FOCUS button (S673 on CK-50 board)
      ......MANUAL mode
   3. WHITE BALANCE button (S676 on CK-50 board)
      ......INDOOR mode ("INDOOR" indication appears on EVF.)
   4. SHUTTER SPEED button (S671 on CK-50 board)
      ......NORMAL mode (No indications of "100" "2000", etc. appear on EVF.)
2) Adjustment order
As a rule, adjust in described order.
3) Objects
   1. Color bar chart (standard picture frame)
      When making Adjustments by the use of a color bar chart, adjust the picture frame as shown in Fig. 9-4. (Standard picture frame)

Color Bar Chart Standard Picture Frame

☆ Basically, adjust the color bar chart standard picture frame with the under-scanning monitor as shown in Fig. a.

1) Place a black window with the horizontal width same as that of a color bar pattern, respectively on left and right sides of the screen. (A=B)

2) Put together lower ends of the color pattern and under-scanning monitor in the vertical direction.

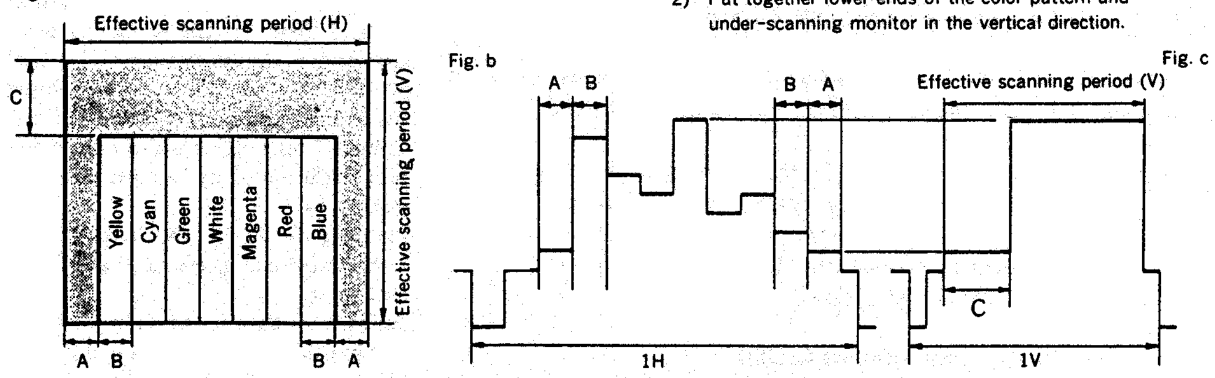

●To photograph the color bar chart standard picture frame shown in Fig. a. adjust Output Y (CN307 ① on VC-99 board) as shown in Fig. b and c.

Fig. 9-4.

   2. All white pattern
      Remove a color bar chart from the pattern box and set the zoom lever fully to the TELE side (68mm).
   3. High luminance pattern
      Prepare a high luminance pattern as shown in Fig. 9-5 and adjust the picture frame as shown in Fig. 9-6.
   4. Siements star
      orient a camera to have the siemens star center coincide with the monitor screen center on a monitor TV screen.

High luminance pattern

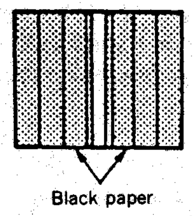

Cover a color bar chart with black paper, except half the width of its white stripe. Then shoot the chart in this state.

Fig. 9-5.

High luminance pattern

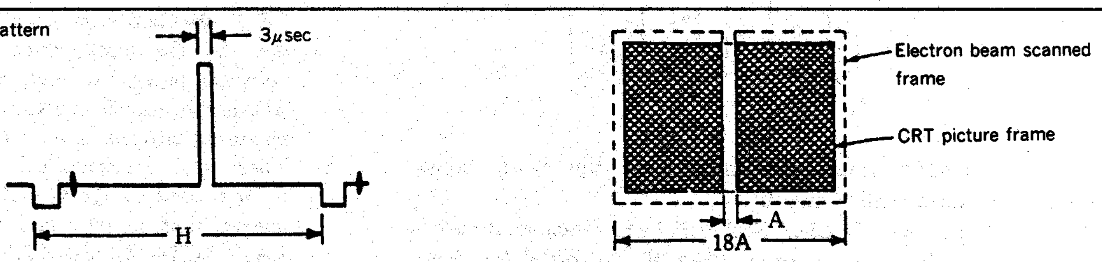

Fig. a (camera output waveform of CPA pin Ⓐ8 on VC-99 board)

Fig. b (Picture of monitor TV screen)

By operating the camera zooming and orientation have the Fig. a output waveform output and the Fig. b monitor TV image displayed.

Fig. 9-6.

9-2-3. Adjustment Remote Control

In the camera block, the EVR (Electronic Variable Resistor) is used as an adjustment element in place of a conventional semi-fixed resistor. The EVR is controlled by the EVR/AWB microcomputer (VC-99 board IC501). This microcomputer reads the data written in the non-volatile memory inside the microcomputer and sends it to the EVR. The EVR generates an adjustment voltage by D-A conversion of this data (8 bits per one adjustment point).

To adjust, the camera block, therefore, it is necessary to rewrite the adjustment data written in the non-volatile memory. The adjustment remote control is used for this purpose. The adjustment remote control performs bidirectional communications with the microcomputer in the camera block through a remote control signal line (LANC). UP/DOWN commands for adjustment page, address and data are sent from the adjustment remote control to the microcomputer in the camera block. Sent from the microcomputer in the camera block to the adjustment remote control are the adjustment page, address and data.

Note : The microcomputer IC in the adjustment remote controller except for new microcomputer (μPD7503G-C56-12) dose not allow the adjustment page selecting. Replace with the new microcomputer (8-759-148-35) in such a case.

1. Using the Adjustment Remote Control

1) Connect the adjustment remote control to the REMOTE terminal (SW-183 board J901).
(Shift the HOLD switch of the adjustment remote control to the HOLD position (SERVICE position).)
2) Turn on the power for the main unit.
3) If the connection is correct, the following is displayed on the adjustment remote control LCD. (The adjustment data varies from one set to another.)

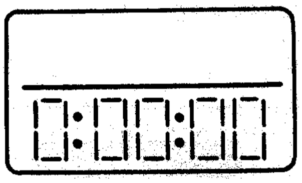

Fig. 9-7. (a)

4) Specify your desired adjustment page by the adjustment remote control.
Pressing the EDIT SEARCH (+) increments the adjustment page. Pressing the EDIT SEARCH (—) decrements it. The adjustment page is shown in the hexadecimal numbers and there are 16 of them from 1 to F. The CAMERA adjustment page is page F and Pressing the EDIT SEARCH (—) buttom one push.

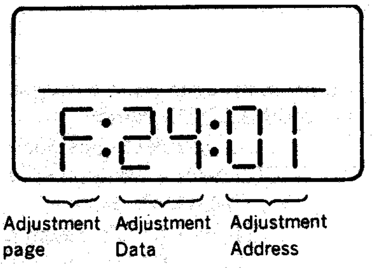

Fig. 9-7. (b)

5) Specify your desired adjustment address by the adjustment remote control. Pressing the FF (▶▶) button increments the adjustment address, and pressing the REW (◀◀) button decrements it.
(The adjustment address is shown in the decimal number and there are 256 of them from 00 to FF. The adjustment address corresponds to the output terminal of the EVR (IC301 on the VC-99 board, IC504 on the VC-99 board, and IC004 of the MX-10 board). Refer to Table 9-1 for adjustment of each address.)
6) Make adjustment by increasing/decreasing the adjustment data.
Pressing the PLAY (▶) button increases the adjustment data, and pressing the STOP (■) button decreases it.

- The adjustment data is shown in the hexadecimal number and assumes 256 kinds of values ranging from 00 to FF.

Hexadecimal No.	0	1	2	3	4	5	6	7	8	9	A	B	C	D	E	F
Indication of LCD	0	1	2	3	4	5	6	7	8	9	A	b	c	d	E	F
Decimal converted value	0	1	2	3	4	5	6	7	8	9	10	11	12	13	14	15

Table 9-1.

- The adjustment data corresponds to the output voltage of the EVR (IC301 on the VC-99 board, IC504 on the VC-99 board, and IC004 on the MX-10 board) as follows:
  MX-10 board IC004 : 2.0 ⟷ 5.0 Vdc
  VC-99 board IC301 : 0 ⟷ 5.0Vdc
  VC-99 board IC504 : 1.0 ⟷ 3.5Vdc

7) Change the adjustment address with the FF (▶▶) or REW (◀◀) button in order to store the adjustment data into the non-volatile memory built in the EVR/AWB microcomputer (VC-99 board IC501).
(If this operation is omitted, new adjustment data will not be stored into the non-volatile memory.)
8) There is a function provided to make note of the last error cuased by the COUNTER RESET button during operation of the set even if the power is turned off. This LAST MEMO EMERGENCY (last error) can be cleared.

2. Cautions for Using the Adjustment Remote Control

Erroneous operation of the adjustment remote control may delete correct adjustment data. To avoid this, it is recommended to make note of all the adjustment data before adjustment and of new adjustment data every time adjustment of one item is completed.

3. List of Adjustment Addresses

Use the adjustment page F for the camera part adjustment of this unit.

Adjust-ment Address	Adjustment Voltage Output Terminal	Adjustment Item	Remarks	Memo Column
01	MX-10 board IC004 pin ⑱	R CONT	Auto white balance adjustment	
02	MX-10 board IC004 pin ⑲	B CONT		
03	MX-10 board IC004 pin ②	C_1 GAIN	Matrix (3) C_1 gain adjustment	
04	MX-10 board IC004 pin ③	B GAIN	Pre-white balance adjustment	
05	MX-10 board IC004 pin ④	R GAIN		
06	MX-10 board IC004 pin ⑤	Y_2 GAIN	Matrix (2) Y_2 gain adjustment	
07	MX-10 board IC004 pin ⑥	Y_1 GAIN	Matrix (1) Y_1 gain adjustment	
08	MX-10 board IC004 pin ⑦	Y_H GAIN	Y_H level adjustment	
09	MX-10 board IC004 pin ⑧	R-Y GAIN	Color reproducibility adjustment	
0A	MX-10 board IC004 pin ⑨	B-Y GAIN		
0B	MX-10 board IC004 pin ⑫	R-Y HUE		
0C	MX-10 board IC004 pin ⑬	B-Y HUE		
0D	VC-99 board IC301 pin ⑱	SHP LEVEL	H aperture Adjustment	
0E	VC-99 board IC301 pin ⑲	Y LEVEL	White clip, Y level adjustments	
0F	VC-99 board IC301 pin ②	VAP GAIN		
10	VC-99 board IC301 pin ③	SET UP	Set up adjustment	
11	VC-99 board IC301 pin ④	C LEVEL	Chroma level adjustment	
12	VC-99 board IC301 pin ⑤	V SUB CONT	V sub adjustment	
13	VC-99 board IC301 pin ⑥	PG CONT	PG cont adjustment	
14	VC-99 board IC301 pin ⑦	$Y\gamma$ CONT		
15	VC-99 board IC301 pin ⑧	WHITE CLIP	White clip adjustment	
16	VC-99 board IC301 pin ⑨	SYNC LEVEL	Sync level adjustment	
17	VC-99 board IC301 pin ⑫	BURST LEVEL	Burst level adjustment	
18	VC-99 board IC301 pin ⑬	MAX GAIN	Set up, Max gain adjustments	
19	VC-99 board IC504 pin ⑱	IRIS REF	Iris adjustment	
1A	VC-99 board IC504 pin ⑲	AGC REF	AGC adjustment	
1B	VC-99 board IC504 pin ②	HALL GAIN	Hall adjustment	
1C	VC-99 board IC504 pin ③	HALL OFFSET		
1D	VC-99 board IC504 pin ④	FADER LEVEL		
1E	VC-99 board IC504 pin ⑤	————		
1F	VC-99 board IC504 pin ⑥	FADER CONT		
20	VC-99 board IC504 pin ⑦	FOCUS SPEED		
21	VC-99 board IC504 pin ⑧	ZOOM SPEED		
22	VC-99 board IC504 pin ⑨	M IRIS CONT	Not used	
23	VC-99 board IC504 pin ⑫	M AGC CONT		
24	VC-99 board IC504 pin ⑬	AGC IN PULSE		

Table 9-2 (1).

Adjust-ment Address	Adjustment Voltage Output Terminal	Adjustment Item	Remarks	Memo Column
25		AGC LD REF		
26		AGC MD	AF adjustment	
27		AGC HD		
28		LD-B		
29		HD-B		
2A		M SPEED-A	Focus motor speed adjustment	
2B		M SPEED-B		
2C		M SPEED-C		
2D		M SPEED-D		
2E		M SPEED-E		
2F		HOLD TIME		
30		PA SET	AF adjustment	
31		AGC LD TH		
32		HD TH1		
33		HD TH2		
34		ZOOM-POSI 1		
35		ZOOM-POSI 2		
36		ZOOM-POSI 3		
37		ZOOM-POSI 4		
38		ZOOM-POSI 5		
39		GETA MIN		
3A		GETA		
3B		BACK RUSH		
3C		MACRO TIME OUT		
3D		ZOOM-TAN-MASK		
3E		BACK RUSH ZOOM		
3F		IRIS L		
40		IRIS H		
41		MACRO END COUNT		
42		FILTER GAIN		
43		LD FILTER GAIN		
44		AGC LD BIAS		
45		AGC CONT W	AF adjustment	
46		AGC CONT B		

Table 9-2 (2).

Adjust-ment Address	Adjustment Voltage Output Terminal	Adjustment Item	Remarks	Memo Column
47		AGC LD GAIN		
48		SHIND STOP		
49		INV COUNT MAX		
4A		ADJ PWM	Focus motor speed adjustment	
4B		AGC COUNT TH		
4C		END COUNT THF		
4D		END COUNT THF		
4E		FDL GIKAI TH		
4F		FDN TH		
50		FDP TH		
51		HANTING ZONE		
52		M SPEED UP		
53		PA GIKAI TH		
54		———		
55		———		
56		———		
57		———		
58		ZOOM-SPEED 1		
59		ZOOM-SPEED 2		
5A		ZOOM-SPEED 3		
5B		ZOOM-SPEED 4		
5C		MAN PWM SPEED	Focus motor speed adjustment	
5D		MAN F SPEED		
5E		———		
5F		———		
60		IRIS REF-NOR	Standard AE level adjustment	
61		IRIS REF-PO		
62		IRIS REF-SP		
63		———		
64		———		
65		———		
66		———		
67		———		
68		———		
69		———		

Table 9-2 (3)

Adjust-ment Address	Adjustment Voltage Output Terminal	Adjustment Item	Remarks	Memo Column
6A		————		
6B		MAXSHUT-PO (H)		
6C		MAXSHUT-PO (L)		
6D		MAXSHUT-SP (H)		
6E		MAXSHUT-SP (L)		
6F		REF-WIDTH (H)		
70		REF-WIDTH (L)		
71		SHUT-MULTI (H)		
72		SHUT-MULTI (L)		
73		SHUT-COUNT 1		
74		SHUT STEP-MULTI		
75		IRIS OPEN		
76		REF-TURBO (H)		
77		REF-TURBO (L)		
78		TURBO-WIDTH (H)		
79		TURBO-WIDTH (L)		
7A		TURBO-TR (H)		
7B		TURBO-TR (L)		
7C		SHUT-COUNT 2		
7D		SHUT-COUNT 3		
7E		————		
7F		————		
80		USER R-Y GAIN		
81		USER B-Y GAIN		
82		USER B-Y HUE		
83		USER R-Y HUE		
84		USER SHP LEVEL		
85		USER Y LEVEL		
86		————		
87		————		
88		————		
89		————		
8A		————		
8B		————		
8C		————	Standard AE level adjustment	

Table 9-2 (4).

Adjust-ment Address	Adjustment Voltage Output Terminal	Adjustment Item	Remarks	Memo Column
8D		————		
8E		————		
8F		————		
90		R3200 MSB		
91		R3200 LSB		
92		B3200 MSB		
93		B3200 LSB		
94		G3200 MSB		
95		G3200 LSB		
96		SHUTTER IN	Shutter IN/OUT adjustment	
97		SHUTTER OUT		
98		START R	Auto white balance adjustment	
99		START B		
9A		R OUT DOOR		
9B		B OUT DOOR		
9C		————		
9D		————		
9E		————		
9F		————		
A0		Ra	Auto white balance adjustment	
A1		Rb		
A2		Rc		
A3		Ba		
A4		Bb		
A5		Bc		
A6		R/B TOP		
A7		R/B MDL		
A8		R/B BTM		
A9		B/R TOP		
AA		B/R MDL		
AB		B/R BTM		
AC		BTM SLP R		
AD		BTM SLP B		
AE		MDL SLP R		
AF		MDL SLP B		

Table 9-2 (5).

Adjust-ment Address	Adjustment Voltage Output Terminal	Adjustment Item	Remarks	Memo Column
B0		TOP SLP R	Auto white balance adjustment	
B1		TOP SLP B		
B2		KEIKO R		
B3		KEIKO B		
B4		BTM UP		
B5		BTM DWN		
B6		MDL UP		
B7		MDL DWN		
B8		TOP UP	Auto white balance adjustment	
B9		TOP DWN		
BA		KEIKO		
BB		KEIKO DWN		
BC		R TOP LMT		
BD		R DWN LMT	Auto white balance adjustment	
BE		B TOP LMT		
BF		B IN TOP		
C0		B IN MAX		
C1		B OUT MIN		
C2		B OUT DWN		
C3		B DWN LMT		
C4		LL LMT		
C5		TM DIVID		
C6		BM DIVID		
C7		DELAY TM		
C8		FAST TM		
C9		OUT HYS OFF		
CA		OUT B HYS		
CB		———		
CC		———		
CD		———		
CE		———		
CF		———		
D0		SYSTEM	NTSC/PAL select	
D1		———		
D2		———		

Table 9-2 (6).

<table>
<tr><th>Adjust-ment Address</th><th>Adjustment Voltage Output Terminal</th><th>Adjustment Item</th><th>Remarks</th><th>Memo Column</th></tr>
<tr><td>D3</td><td></td><td>—</td><td></td><td></td></tr>
<tr><td>D4</td><td></td><td>—</td><td></td><td></td></tr>
<tr><td>D5</td><td></td><td>—</td><td></td><td></td></tr>
<tr><td>D6</td><td></td><td>—</td><td></td><td></td></tr>
<tr><td>D7</td><td></td><td>—</td><td></td><td></td></tr>
<tr><td>D8</td><td></td><td>—</td><td></td><td></td></tr>
<tr><td>D9</td><td></td><td>—</td><td></td><td></td></tr>
<tr><td>DA</td><td></td><td>—</td><td></td><td></td></tr>
<tr><td>DB</td><td></td><td>—</td><td></td><td></td></tr>
<tr><td>DC</td><td></td><td>—</td><td></td><td></td></tr>
<tr><td>DD</td><td></td><td>—</td><td></td><td></td></tr>
<tr><td>DE</td><td></td><td>—</td><td></td><td></td></tr>
<tr><td>DF</td><td></td><td>—</td><td></td><td></td></tr>
<tr><td>E0</td><td></td><td>DISPLAY MODE</td><td>The following adjustment mode is selected by changing the adjustment data.
<table>
<tr><th>Adjustment data.</th><th>Adjustment Mode</th></tr>
<tr><td>00</td><td>DISPLAY MODE R, B, CONT</td></tr>
<tr><td>01</td><td>NEW R, B</td></tr>
<tr><td>02</td><td>R RATIO</td></tr>
<tr><td>03</td><td>B RATIO</td></tr>
<tr><td>04</td><td>R GAIN</td></tr>
<tr><td>05</td><td>B GAIN</td></tr>
<tr><td>06</td><td>RM DATA</td></tr>
<tr><td>07</td><td>GM DATA</td></tr>
<tr><td>08</td><td>BM DATA</td></tr>
<tr><td>09</td><td>NORM R</td></tr>
<tr><td>0A</td><td>NORM B</td></tr>
<tr><td>0B</td><td>R DATA</td></tr>
<tr><td>0C</td><td>G DATA</td></tr>
<tr><td>0D</td><td>B DATA</td></tr>
<tr><td>0E</td><td>R_1, B AIM</td></tr>
<tr><td>0F</td><td>ERROR</td></tr>
</table></td><td></td></tr>
<tr><td>E1</td><td></td><td>—</td><td></td><td></td></tr>
<tr><td>E2</td><td></td><td>—</td><td></td><td></td></tr>
</table>

Table 9-2 (7).

<table>
<tr><th>Adjust-ment Address</th><th>Adjustment Voltage Output Terminal</th><th>Adjustment Item</th><th>Remarks</th><th>Memo Column</th></tr>
<tr><td>E3</td><td></td><td>———</td><td></td><td></td></tr>
<tr><td>E4</td><td></td><td>———</td><td></td><td></td></tr>
<tr><td>E5</td><td></td><td>———</td><td></td><td></td></tr>
<tr><td>E6</td><td></td><td>———</td><td></td><td></td></tr>
<tr><td>E7</td><td></td><td>———</td><td></td><td></td></tr>
<tr><td>E8</td><td></td><td>———</td><td></td><td></td></tr>
<tr><td>E9</td><td></td><td>———</td><td></td><td></td></tr>
<tr><td>EA</td><td></td><td>———</td><td></td><td></td></tr>
<tr><td>EB</td><td></td><td>MODE</td><td>The following adjustment mode is selected by changing the adjustment data.
<table>
<tr><th>Adjustment Data</th><th>Adjustment Mode</th></tr>
<tr><td>00</td><td>NORMAL</td></tr>
<tr><td>01</td><td>F-HANTING</td></tr>
<tr><td>03</td><td>ZOOM-POSI</td></tr>
<tr><td>05</td><td>IRIS-POSI</td></tr>
<tr><td>0B</td><td>AGC-CONT</td></tr>
<tr><td>11</td><td>SHUTTER IN/OUT</td></tr>
<tr><td>13</td><td>IRIS LEVEL</td></tr>
<tr><td>ED</td><td>FILTER-MD</td></tr>
<tr><td>EF</td><td>FILTER-HD</td></tr>
<tr><td>F1</td><td>FILTER-LD</td></tr>
<tr><td>F5</td><td>FP3 HANTING</td></tr>
</table></td><td></td></tr>
<tr><td>EC</td><td></td><td>AWB MODE 3</td><td></td><td></td></tr>
<tr><td>ED</td><td></td><td>AWB MODE 2</td><td></td><td></td></tr>
<tr><td>EE</td><td></td><td>AWB MODE 1</td><td>The following auto white balance adjustment mode is selected by changing the adjustment data.
<table>
<tr><th>Adjustment Data</th><th>Adjustment Mode</th></tr>
<tr><td>00</td><td>AWB MODE 1</td></tr>
<tr><td>10</td><td>WB DIRECT</td></tr>
<tr><td>F0</td><td>WB FREE</td></tr>
<tr><td>01</td><td>3200k Data fetch 1</td></tr>
<tr><td>23</td><td>3200k Data fetch 2</td></tr>
</table></td><td></td></tr>
</table>

Table 9-2 (8).

Adjust-ment Address	Adjustment Voltage Output Terminal	Adjustment Item	Remarks	Memo Column
EF		———		
F0		———		
F1		———		
F2		———		
F3		———		
F4		———		
F5		———		
F6		———		
F7		———		
F8		———		
F9		———		
FA		———		
FB		———		
FC		———		
FD		———		
FE		———		
FF		———		

Table 9-2 (9).

9-2-4. Checkpoint Array

Most measurement points for adjustment of the camera block are concentrated on the checkpoint array of the VC-99 board. Solder a short lead wire, etc. to the terminal required for adjustment and connect an oscilloscope. Table 9-3 shows the terminal numbers and signal names of the checkpoint array.

Note. The CPA connector jig (J-6082-109-A) allows you to connect an oscilloscope easily.

Terminal No.	Signal Name	Terminal No.	Signal Name
A1	N.C	B1	N.C
A2	PG CONT	B2	N.C
A3	MODE B	B3	Y (LPF) OUT
A4	N.C	B4	V_{SUB}
A5	VAP OUT	B5	VAP SLICE
A6	TP	B6	N.C
A7	WB-G	B7	Y_H GAIN
A8	CAM Y	B8	Y_2 GAIN
A9	Y_H	B9	N.C
A10	CAM C	B10	GND
A11	Y_H OUT 1	B11	IRIS OUT

Table 9-3.

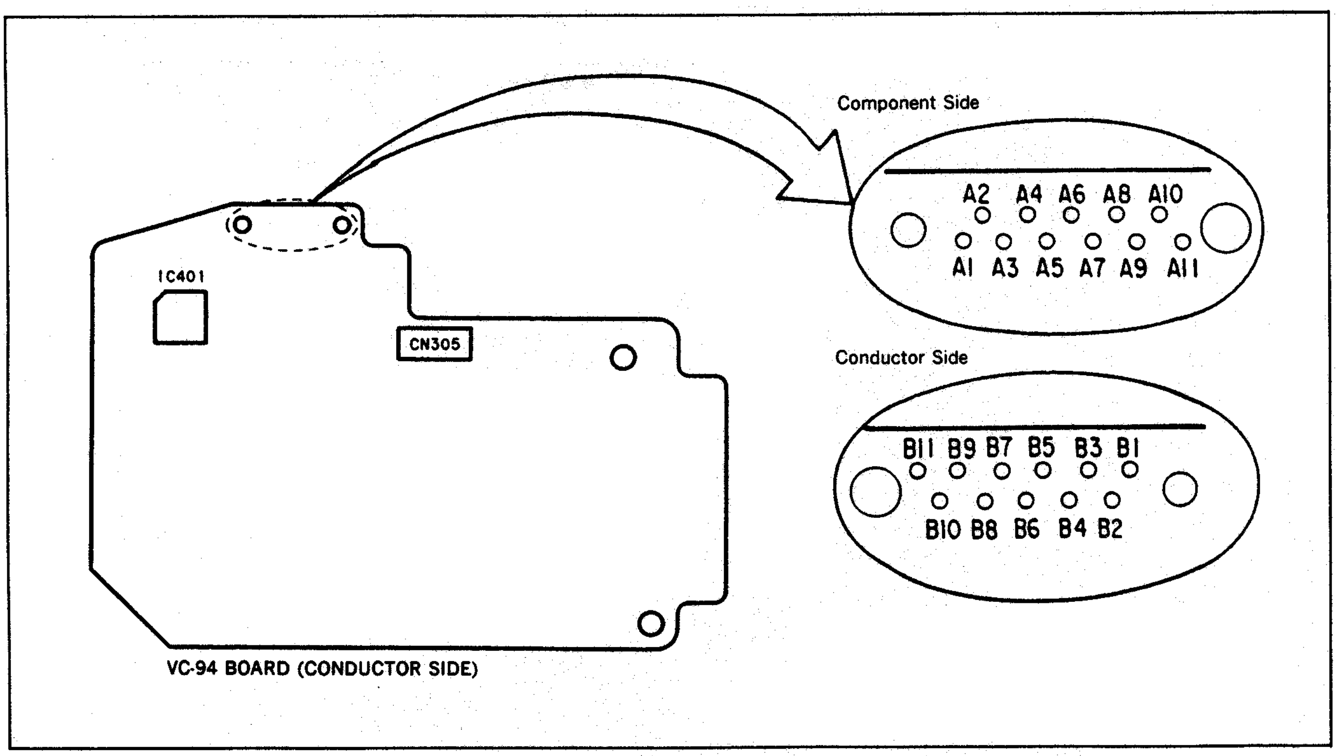

Fig. 9-8.

9-2-5. AF Microcomputer Data Reader Jig

The AF microcomputer data reader jig converts adjustment serial data outputted from the AF microcomputer (AF-86 board CN801) (different data are outputted depending on the adjustment mode, such as HALL (iris) state, focus state, focus motor speed, zoom ring position, etc.) into 2-digit hexadecimal numbers and indicates on the LED.

Note :
Change the fixed number of R1 from 10kΩ to 100kΩ in the AF microcomputer data reader jig. (If the number is kept to 10kΩ, the adjustment data can not change because of the difference of the impedance.)
When adjusting the old-model Handy Cam, 100kΩ is allowed to perform the adjustment.

[Connection]
Connect as shown in the figure below :

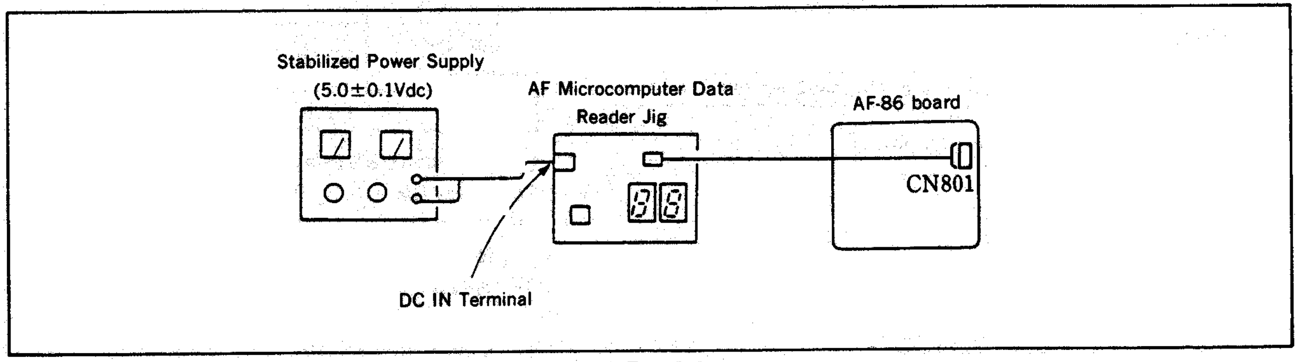

Fig. 9-9.

9-2-6. Data Processing

In order to obtain adjustment data in some adjustment items, it is necessary to compute the display data (hexadecimal number) of the AF microcomputer data reader jig and adjustment remote control.

In this case, convert the hexadecimal number into the decimal number before computation, convert its computed result back into the decimal number to assume it as the adjustment data. Table 9-4.shows a hexadecimal-decimal conversion table.

Hexadecimal — Decimal Conversion Table

②↓ (column D)

Higher Digit of Hex. No. / Lower Digit of Hex. No.	0	1	2	3	4	5	6	7	8	9	A (A)	B (b)	C (c)	D (d)	E (E)	F (F)
0	0	1	2	3	4	5	6	7	8	9	10	11	12	13	14	15
1	16	17	18	19	20	21	22	23	24	25	26	27	28	29	30	31
2	32	33	34	35	36	37	38	39	40	41	42	43	44	45	46	47
3	48	49	50	51	52	53	54	55	56	57	58	59	60	61	62	63
4	64	65	66	67	68	69	70	71	72	73	74	75	76	77	78	79
5	80	81	82	83	84	85	86	87	88	89	90	91	92	93	94	95
6	96	97	98	99	100	101	102	103	104	105	106	107	108	109	110	111
7	112	113	114	115	116	117	118	119	120	121	122	123	124	125	126	127
8	128	129	130	131	132	133	134	135	136	137	138	139	140	141	142	143
9	144	145	146	147	148	149	150	151	152	153	154	155	156	157	158	159
A (A)	160	161	162	163	164	165	166	167	168	169	170	171	172	173	174	175
①→ B (b)	176	177	178	179	180	181	182	183	184	185	186	187	188	189	190	191
C (c)	192	193	194	195	196	197	198	199	200	201	202	203	204	205	206	207
D (d)	208	209	210	211	212	213	214	215	216	217	218	219	220	221	222	223
E (E)	224	225	226	227	228	229	230	231	232	233	234	235	236	237	238	239
F (F)	240	241	242	243	244	245	246	247	248	249	250	251	252	253	254	255

Note : Values in parentheses are those displayed on the AF microcomputer reader jig or adjustment remote control.

(Example) When the AF microcomputer reader jig or adjustment remote control displays "BD (bd) ;
Since the higher digit of the hexadecimal number is B (b) and its lower digit is D (d), the decimal r number to be obtained is "189" at an intersecting point of ① and ② in the table above.

Table. 9-4.

9-3. ADJUSTMENT OF CAMERA SYSTEM

- In principle, all adjustments must be made in accordance with Adjustment procedure.
- When replacing lens, do not forget to make the following adjustment.
- When replacing CCD imager or lens, do not forget to adjust the camera system property.

9-3-1. Prime Oscillation Adjustment (CD-65 Board)

Object	Color bar chart standard picture frame
Measurement point	DT-77 board pin ③
Measuring instrument	Frequency counter
Adjustment element	CT122
Specified value	14187500±71Hz

Note : Connect the frequency counter through a buffer amplifier (Oscilloscope, etc.) having high impedance and low capacitance.

[Adjustment Method]

1) Adjust to 14187500±71Hz with CT122.

9-3-2. PLL Adjustment (CD-65 Board)

Object	Optional
Measurement point	See Fig. 9-10.
Measuring instrument	Digital voltmeter
Adjustment element	CT121
Specified value	2.5±0.2Vdc

[Adjustment Method]

1) Adjust to 2.5±0.2Vdc with CT121.

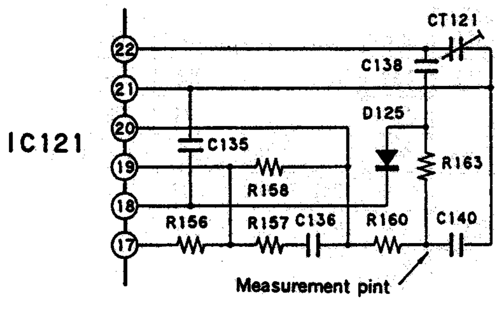

Fig. 9-10.

9-3-3. Flange Back Adjustment

Object	Siemens star (at 2 m in front of the lens datum level Φ mark)
Measurement point	Check with the monitor TV.
Measuring instrument	Check with the monitor TV.
Adjustment element	Flange back adjusting pin
Tools	Phillips screwdriver

[Adjustment Method]

1) Press the FOCUS button to select the MANUAL mode.
2) Place the Siemens star at a distance of 2 m in front of the lens datum level (refer to Fig. 9-2).
3) Adjust a camera block position to center the Siemens star on the monitor screen with the monitor screen.
4) Check that the lens zoom lever can be moved fully to the WIDE end (8.5 mm) and TELE end (68 mm), respectively, and fix it at the WIDE end. (When this is done, check also zooming operation on the monitor screen.)
5) Set the lens focusing mark at the center of "2".

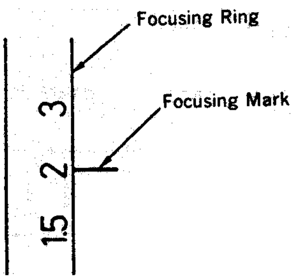

Fig. 9-11.

6) Loosen the flange back setscrew ❶ with the Phillips screwdriver. (Refer to Fig. 9-13)
7) Viewing the monitor screen, turn the flange back adjusting pin ❷ to make clearest the wedge located at the center of the Siemens star on the screen. (Turn it 2 to 3 times to the right and left to check the wedge to be clearest.)
Note : Do not turn the adjusting pin excessively in one direction at a time.
8) Holding the flange back adjusting pin ❷ not to turn it further, tighten the flange back setscrew ❶.
9) With the zoom lever fixed at the WIDE end, turn the focusing ring and stop it at a position which provides the clearest image of the wedge. Check that the focusing ring is within the range shown in Fig. 9-12 at this time.

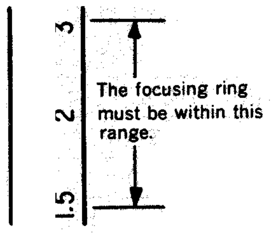

Fig. 9-12.

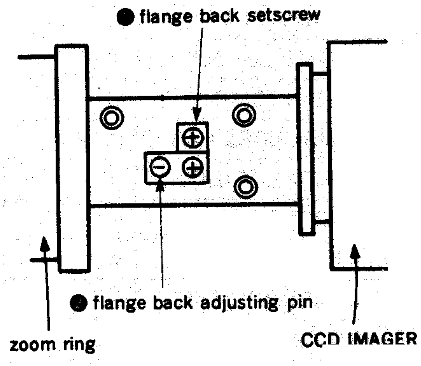

Fig. 9-13.

10) Fix the zoom lever at the TELE end.
11) Turn the focusing ring and stop it at a position which provides the clearest wedge image. When this is done, check that the focusing ring is within a range of ±1.5mm from the center of "2".

9-3-4. Camera DC-DC Converter Voltage Check (VC-99 Board/CD-65 Board)

Measuring isntrument	Digital voltmeter
15V check	
Measurement point	CN101 pin ① (CD-65 Board)
Specified value	$15.0 \pm 0.2V_{DC}$
−9V check	
Measurement point	CN101 pin ② (CD-65 Board)
Specified value	$-9.00 \pm 0.15V_{DC}$
4.9V check	
Measurement point	CN101 pin ③ (CD-65 Board)
Specified value	$4.9 \pm 0.1V_{DC}$
CAM 4.9V check	
Measurement point	CN304 pin ④ (VC-99 Board)
Specified value	$4.9 \pm 0.1V_{DC}$

[Checking Method]
1) Each supply voltage must meet the specified value.

9-3-5. EVR Initial Setting of adjustment page F

Set to the following initial settings of the adjustment data only when the CCD IMAGER was replaced.
Make initial setting of adjustment data when the EVR/AWB microcomputer is replaced.
(Pre-replacement microcomputer data will do.)

Adjustment Address	Adjustment Data Initial Value
0E (Y LEVEL)	9C
0F (VAP GAIN)	90
12 (VSUB CONT)	3A
13 (PG CONT)	5A
14 (Yγ CONT)	AE
15 (WHITE CLIP)	FF
18 (MAX GAIN)	E0
19 (IRIS REF)	4C
1F (FADER CONT)	00
25 (AGC LD REF)	B0
26 (AGC MD)	A0
27 (AGC HD)	B0
28 (LD B)	30
29 (HD B)	30
2F (HOLD TIME)	3C
30 (PA SET)	E5
31 (AGC LD TH)	A0

Adjustment Address	Adjustment Data Initial Value
32 (HD TH1)	30
33 (HD TH2)	1E
34 (ZOOM-POSI 1)	0F
35 (ZOOM-POSI 2)	3C
36 (ZOOM-POSI 3)	6B
37 (ZOOM-POSI 4)	9A
38 (ZOOM-POSI 5)	CA
39 (GETA MIN)	05
3A (GETA)	10
3B (BACK RUSH)	05
3C (MACRO TIME OUT)	07
3D (ZOOM-TAN-MASK)	30
3E (BACK RUSH ZOOM)	0A
3F (IRIS L)	AC
40 (IRIS H)	C0
41 (MACRO END COUNT)	3C
42 (FILTER GAIN)	02
43 (LD FILTER GAIN)	06
44 (AGC LD BIAS)	80
45 (AGC COUNT W)	30
46 (AGC COUNT B)	FF
47 (AGC LD GAIN)	A4
48 (SHIND STOP)	20
49 (INV COUNT MAX)	10
4A (ADJ PWM)	FF
4B (AGC COUNT TH)	0A
4C (END COUNT THF)	2A
4D (END COUNT THN)	2A
4E (FDL GIKAI TH)	03
4F (FDN TH)	FD
50 (FDP TH)	03
51 (HANTING ZONE)	05
52 (M SPEED UP)	01
53 (PA GIKAI TH)	09
58 (ZOOM-SPEED 1)	20
59 (ZOOM-SPEED 2)	20
5A (ZOOM-SPEED 3)	50
5B (ZOOM-SPEED 4)	53
5D (MAN F SPEED)	30

Adjustment Address	Adjustment Data Initial Value
60 (IRIS REF NOR)	60
61 (IRIS REF PO)	60
62 (IRIS REF SP)	60
6B (MAX SHUT-PO (H))	00
6C (MAX SHUT-PO (L))	CE
6D (MAX SHUT-SP (H))	00
6E (MAX SHUT-SP (L))	E6
6F (REF-WIDTH (H))	01
70 (REF-WIDTH (L))	00
71 (SHUT-MULTI (H))	06
72 (SHUT-MULTI (L))	00
73 (SHUT-COUNT 1)	06
74 (SHUT STEP-MULTI)	02
75 (IRIS-OPEN)	20
76 (REF-TURBO (H))	06
77 (REF-TURBO (L))	00
78 (TURBO-WIDTH (H))	01
79 (TURBO-WIDTH (L))	00
7A (TURBO-TR (H))	01
7B (TURBO-TR (L))	00
7C (SHUT-COUNT 2)	01
7D (SHUT-COUNT 3)	01
7E (IRIS CLOSE DATA)	F7
80 (USER R-Y GAIN)	10
81 (USER B-Y GAIN)	0D
82 (USER B-Y HUE)	0D
83 (USER R-Y HUE)	0C
84 (USER SHP LEVEL)	0A
85 (USER Y LEVEL)	0C
96 (SHUTTER IN)	B1
97 (SHUTTER OUT)	8B
AC (BTM SLP R)	48
AD (BTM SLP B)	48
AE (MDL SLP R)	40
AF (MDL SLP B)	30

Adjustment Address	Adjustment Data Initial Value
B1 (TOP SLP B)	10
B2 (KEIKO R)	80
B3 (KEIKO B)	30
B4 (BTM UP)	CF
B5 (BTM DWN)	98
B6 (MDL UP)	BE
B7 (MDL DWN)	9B
BA (KEIKO)	C4
BB (KEIKO DWN)	AC
BC (R TOP LMT)	A0
C3 (B DOWN LMT)	26
C4 (LL LMT)	06
C5 (TM DIVID)	6E
C6 (BM DIVID)	41
C7 (DELAY TM)	0A
C8 (FAST TM)	30
C9 (OUT HYS OFF)	15
CA (OUT B HYS)	0D
D0 (SYSTEM)	01
E0 (DISPLAY MODE)	FF
EB (MODE)	00
EC (AWB MODE 3)	01
ED (AWB MODE 2)	00
EE (AWB MODE 1)	00

Table. 9-5.

[Adjustment Method]

1) Set the adjustment page to F with the adjustment remote control.
2) Set the adjustment data for each adjustment address to the initial value with the adjustment remote control.
3) Change the adjustment address in order to memorize the last adjustment data.

9-3-6. PG CONT/V SUB Adjustment (CD-65 Board)

Note : PG CONT specified voltage and V SUB specified volatage are indicated by the two digits on CCD imager.

CD-65 BOARD (CONDUCTOR SIDE)

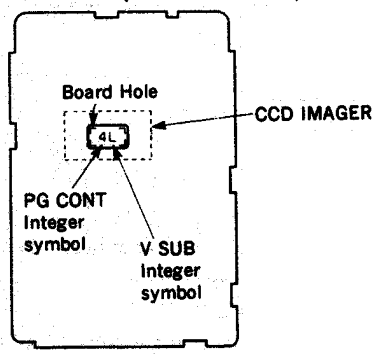

● PG CONT

Integer symbol	Voltage (V)
0	0.5
1	1.0
2	1.5
3	2.0
4	2.5
5	3.0
6	3.5
7	4.0

● V SUB

Integer symbol	Voltage (V)	Integer symbol	Voltage (V)	Integer symbol	Voltage (V)
A	7.0	J	11.0	S	15.0
B	7.5	K	11.5	T	15.5
C	8.0	L	12.0	U	16.0
D	8.5	M	12.5	V	16.5
E	9.0	N	13.0	W	17.0
F	9.5	P	13.5	X	17.5
G	10.0	Q	14.0	Y	18.0
H	10.5	R	14.5	Z	18.5

Example : For 「4L」 display,
•PG CONT=2.5V
•V SUB=12.0V

Fig. 9-14.

A. PG CONT Adjustment

Object	Not used
Measurement point	Checkpoint array pin (A2) (PG CONT)
Measuring instrument	Digital voltmeter
Adjustment page	F
Adjustment address	13 (PG CONT)
Specified value	(CCD imager specified voltage) ±0.1V_{DC}

[Adjustment Method]

1) Set the adjustment page F and the adjustment address 13 with the adjustment remote control.
2) Change the adjustment data to be (CCD imager specified voltage) ± 0.1Vdc with the adjustment remote control.
3) Change the adjustment address to store the adjustment data.

B. V SUB Adjustment

Object	Not used
Measurement point	Checkpoint array pin (B4) (V SUB)
Measuring equipment	Digital voltmeter
Adjustment page	F
Adjustment address	12 (V SUB)
Specified value	(CCD imager specified voltage) ±3%

[Adjustment Method]

1) Set the adjustment page F and the adjustment address 12 with the adjustment remote control.
2) Change the adjustment data to be (CCD imager specified voltage) ±3% with the adjustment remote control.
3) Change the adjustment address to store the adjustment data.

9-3-7. HALL Adjustment (AF-86 Board)

Object	White pattern standard picture frame All black (Put a black cap over lens)
Measurement point	CN801
Measuring instrument	AF microcomputer data reader jig
Adjustment page	F
Adjustment address	1B (HALL GAIN) 1C (HALL OFFSET)
Specified value	White pattern: C0±1 All black: 03±2

[Adjustment Method]

1) Set the adjustment page to F with the adjustment remote control.
2) Set the adjustment address EB and the adjustment data 05 with the adjustment remote control.
3) Change the adjustment data of address 1B and 1C, so that the data of white pattern is C0±1, all black is 03±2.
4) Change the adjustment address to store the adjustment data.

9-3-8. IRIS Adjustment (VC-99 Board)

Object	Color bar chart standard picture frame
Filter	ND filter: 0.5 (0.1+0.4)
Measurement point	Checkpoint array pin (B11) (IRIS OUT)
Measuring instrument	Oscilloscope
Adjustment page	F
Adjustment address	19 (IRIS)
Specified value	150±10 mV

[Adjustment Method]

1) Select the adjustment page F and the adjustment address 19 with the adjustment remote control.
2) With no ND filter attached, change the adjustment data with the adjustment control to adjust the IRIS OUT signal level to 150±10 mV.
3) Attach the ND filter 0.5 (0.1+0.4) in front of the lens and check that the signal level changes smoothly.
4) Remove the ND filter and check that the signal level is 150±20 mV.
5) When the specified value is not met, repeat the steps 2) through 4).
6) Change the adjustment address in order to store the adjustment data.

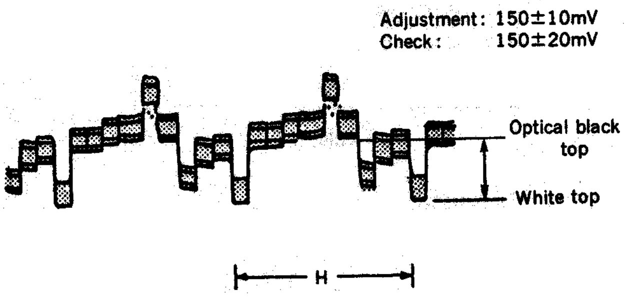

Fig. 9-15.

9-3-9. Shutter IN/OUT Adjustment (AF-86 Board)

Object	White pattern standard picture frame
Filter	ND filter : 0.5 (0.1+0.4)
Measurement point	CN801
Measuring instrument	AF microcomputer data reader jig
Adjustment page	F
Adjustment address	97 (SHUTTER OUT) 96 (SHUTTER IN)

[Adjustment Method]

1) Select the adjustment page F with the adjustment remote control.
2) Set the adjustment address EB and the adjustment data 11 with the adjustment remote control.
3) Change the adjustment address in order to store the adjustment data.
4) Set the 1/2000 mode with the shutter speed button.
5) Set the 🏃 mode with the program AE button.
6) Attach the ND filter 0.5 (0.1+0.4) to the front of the lens, and confirm that the data of AF microcomputer data reader jig is more than 81. (This data is assumed as data S.)
7) Set the adjustment address 97 with adjustment remote control and enter to the adjustment data S.
8) Set the adjustment address 96 with adjustment remote control and enter to the adjustment data (S+0A).
9) Change the adjustment address in order to store the adjustment data.
10) Attach the black cap to the front of the ND filter 0.5 and confirm that the data of AF microcomputer data reader jig is FF.
11) After adjustment, set the adjustment address EB and the adjustment data 00. Change the adjustment address in order to store the adjustment data.

9-3-10. AGC Adjustment (VC-99 Board)

Note : When there is much noise, measure by inserting 5.6kΩ resistance.

Object	Color bar chart standard picture frame
Measurement point	Checkpoint array pin (B3) (Y (LPF) OUT)
Measuring instrument	Oscilloscope
Adjustment page	F
Adjustment address	1A (AGC)
Specified value	180±5 mV

[Adjustment Method]

1) Select the adjustment page F and the adjustment address 1A with the adjustment remote control.
2) Change the adjustment data with the adjustment remote control to set the Y (LPF) signal level to 180±5 mV.
3) Change the adjustment address in order to store the adjustment data.

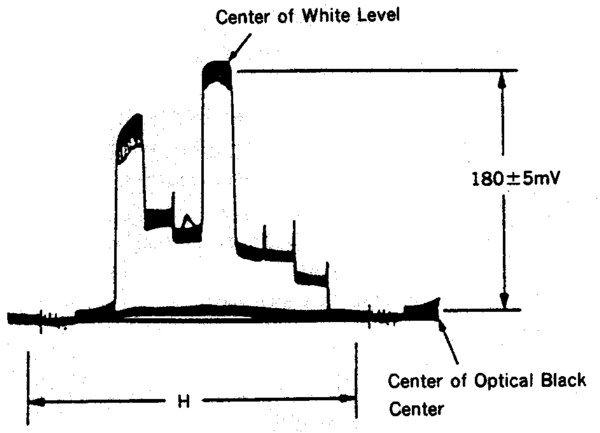

Fig. 9-16.

9-3-11. Matrix Adjustment

(1) Y1 Gain Adjustment (VC-99 Board)

Object	Color bar chart standard picture frame
Measurement point	Checkpoint array pin(A5)(VAP OUT)
Measuring instrument	Oscilloscope
Adjustment page	F
Adjustment address	07 (Y_1 Gain)
Specified value	$Y_0-Y_1=0\pm5mV$

[Preparation]

1) Short the checkpoint array pin(B8)(Y_2 Gain) and pin(B5) (VAP SLICE) with GND.

[Adjustment Method]

1) Select the adjustment page F with the adjustment remote control.
2) Select the adjustment address 0F by the adjustment remote control and preset the adjustment data to be 00. (VAP GAIN : MAX)
3) Select the adjustment address 07 by the adjustment remote control.
4) Change the adjustment data and set the Y_0-Y_1 waveform to be a straight line. (There should not be difference.)
5) Change the adjustment address in order to store the adjustment data.
6) Open the checkpoint array pin(B8)and pin(B5)

Note : After the adjustment, be sure to adjust the matrix (2) Y_2 Gain Adjustment.

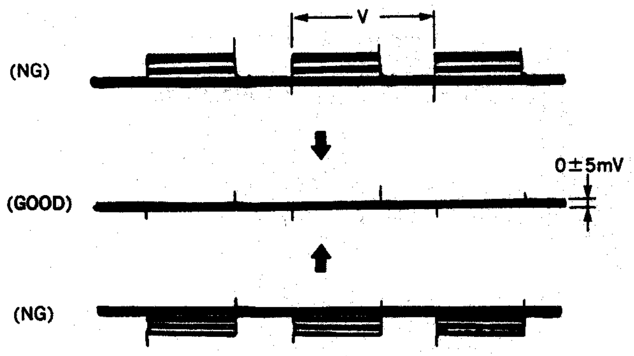

Fig. 9-17.

(2) Y_2 Gain Adjustment (VC-99 Board)

Object	Color bar chart standard picture frame
Measurement point	Checkpoint array pin(A5)(VAP OUT)
Measuring instrument	Oscilloscope
Adjustment page	F
Adjustment address	06 (Y_2 GAIN)
Specified value	$0\pm5mV$

[Preparation]

1) Short the chickpoint array pin(B5)(VAP SLICE) with GND.

[Adjustment Method]

1) Select the adjustment page F by the adjustment remote control.
2) Select the adjustment address 0F by the adjustment remote control and preset the adjustment data to be 00. (VAP GAIN : MAX)
3) Select the adjustment address 06 by the adjustment remote control.
4) Change the adjustment data and set the $(Y_1-\frac{Y_0+Y_2}{2})$ waveform to be a straight line. (There should not be difference.)
5) Select the adjustment address 0F by the adjustment remote control and set the adjustment data to be 7A.
6) Change the adjustment address in order to store the adjustment data.
7) Open the checkpoint array pin(B5) .

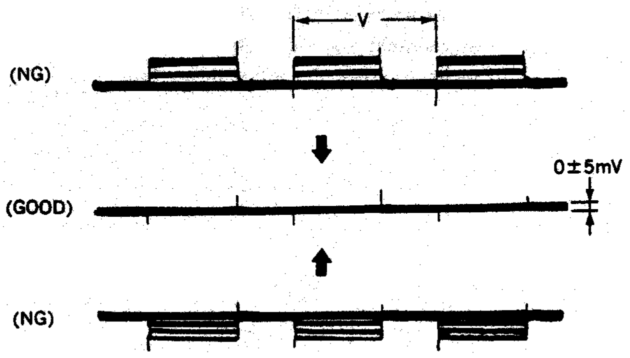

Fig. 9-18.

(3) C_1 Gain Adjustment

Object	Color bar chart standard picture frame
Measurement point	VIDEO OUT terminal
Measuring instrument	Vectorscope
Adjustment page	F
Adjustment address	03 (C_1 GAIN)
Specified value	Minimize the divided bright point. (Cyan, green ···Within 2.0 mm / Magenta ······ Within 1.0 mm / Others ········· Within 0.5 mm)

[Adjustment Method]

1) Select the adjustment page F and the adjustment address 03 by the adjustment remote control.
2) Change the adjustment data to coincide each color bright point.
3) Change the adjustment address in order to store the adjustment data.

Specified Values When Vectorscope is used.

(Specified value :Cyan, Green. . . . Within 2.0mm
Magenta . . . . . . Within 1.0mm
Others . . . . Within 0.5mm)

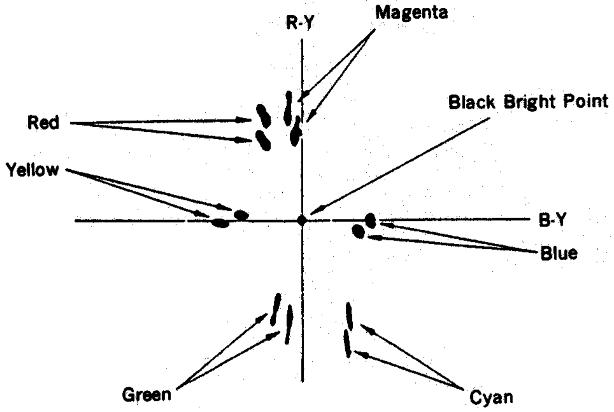

Fig. 9-19.

9-3-12. Y_H Level Adjustment (VC-99 Board)

Object	Color bar chart standard picture frame
Measurement point	Checkpoint array pin (A6) (TP)
Measuring instrument	Oscilloscope
Adjustment page	F
Adjustment address	08 (Y_H GAIN)
Specified value	0±5mV

[Adjustment Method]

1) Select the adjustment page F and the adjustment address 08 by the adjustment remote control.
2) Change the adjustment data by the adjustment remote control in order that the output is a straght line. (There should not be differece: 0+5mV)
3) Change the adjustment address in order to store the adjustment data.

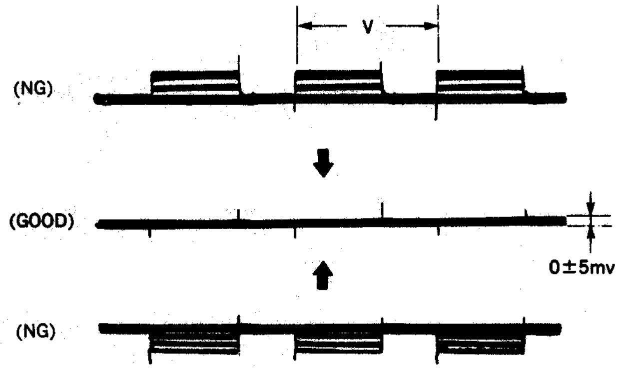

Fig. 9-20.

9-3-13. Chroma Level Adjustment (VC-99 Borad)

Object	Color bar chart standard picture frame
Measurement point	Checkpoint array pin (A7) (WB-G)
Measuring instrument	Oscilloscope
Adjustment page	F
Adjustment address	11 (C LEVEL)
Specified value	320±20mV

[Adjustment Method]

1) Select the adjustment page F and the adjustment address 11 with the adjustment remote control.
2) Change the adjustment data with the adjustment remote control to adjust the White level to 320±20 mV.
3) Change the adjustment address in order to store the adjustment data.

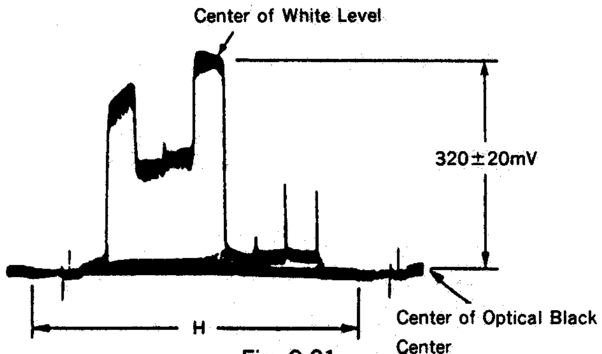

Fig. 9-21.

9-3-14. Sync. Level Adjustment (VC-99 Board)

Object	All black (Cover the lens with a black cap.)
Measurement point	CN307 pin ① (Y OUT) or checkpoint array pin (A8) (CAM Y)
Measuring instrument	Oscilloscope
Adjustment page	F
Adjustment address	16 (SYNC LEVEL)
Specified value	150±5mV

[Adjustment Method]

1) Select the adjustment page F and the adjustment address 16 with the adjustment remote control.
2) Change the adjustment data with the adjustment remote control to adjust the sync. level to 150±5mV.
3) Change the adjustment address in order to store the adjustment data.

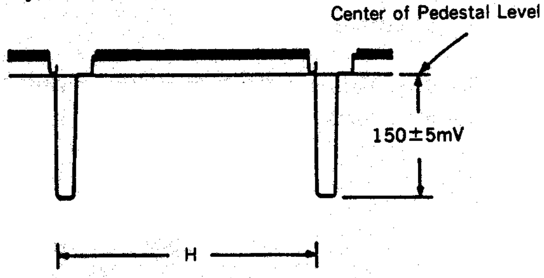

Fig. 9-22.

9-3-15. Setup Adjustment (VC-99 Board)

Object	All black (Cover the lens with a black cap.)
Measurement point	CN307 pin ① (Y OUT) or checkpoint array pin (A8) (CAM Y)
Measuring instrument	Oscilloscope
Adjustment page	F
Adjustment address	10 (SET UP) 18 (MAX GAIN)
Specified value	15±5mV

[Adjustment Method]

1) Select the adjustment page F with the adjustment remote control.
2) Select the adjustment address 18 with the adjustment remote control, make note of the adjustment data of this address (data F), and then, set the adjustment data to 00.
3) Select the adjustment address 10 with the adjustment remote control.
4) Change the adjustment data with the adjustment remote control to adjust the setup level to 15±5mV.
5) Select the adjustment address 18 and enter to the adjustment data F.
6) Change the adjustment address in order to store the adjustment data.

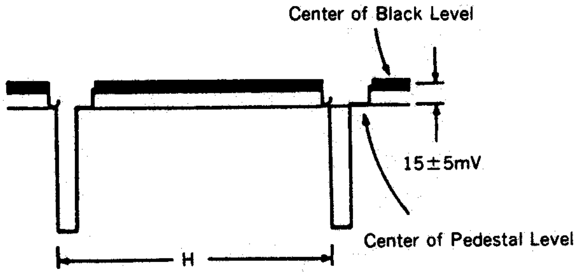

Fig. 9-23.

9-3-16. White Clip Adjustment (VC-99 Board)

Object	Color bar chart standard picture frame
Measurement point	CN307 pin ① (Y OUT) or checkpoint array pin (A8) (CAM Y)
Measuring instrument	Oscilloscope
Adjustment page	F
Adjustment address	15 (WC) 0E (Y LEVEL)
Specified value	420±10mV

[Adjustment Method]

1) Select the adjustment page F with the adjustment remote control.
2) Select the adjustment address 0E with the adjustment remote control, make note of the adjustment data of this address (data G), and then, set the adjustment data to FF.
3) Set the adjustment address to 15 with the adjustment remote control.
4) Change the adjustment data with the adjustment remote control to adjust the white clip level to 420±10mV.
5) Select the adiustment address 0E and enter to adjustment data G.
6) Change the adjustment address in order to store the adjustment data.
7) Make Y level adjustment as described in 9-3-17.

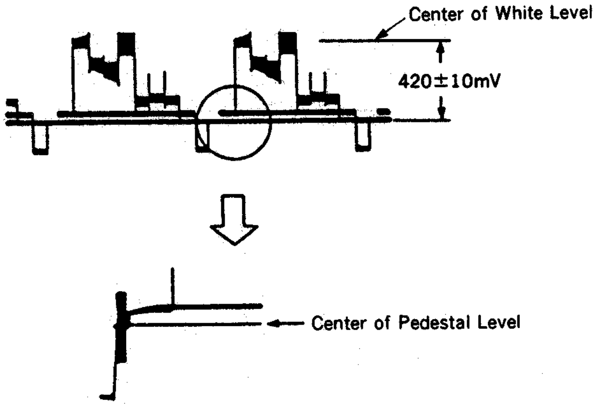

Fig. 9-24.

9-3-17. Y Level Adjustment (VC-99 Board)

Object	Color bar chart standard picture frame
Measurement point	CN307 pin ① (Y OUT) or checkpoint array pin (A8) (CAM Y)
Measuring instrument	Oscilloscope
Adjustment page	F
Adjustment address	0E (Y LEVEL)
Specified value	330±5mV

[Adjustment Method]

1) Check that the specified value in "9-3-16 White Clip Adjustment" is met.
2) Select the adjustment page F and the adjustment address 0E with the adjustment remote control.
3) Change the adjustment data with the adjustment remote control and adjust the Y signal level to 330±5mV.
4) Change the adjustment address in order to store the adjusment data.

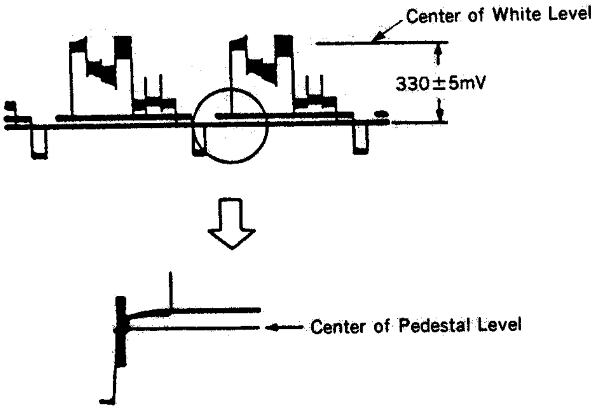

Fig. 9-25.

9-3-18. H Aperture Adjustment (VC-99 Board)

Object	Color bar chart standard picture frame
Measurement point	CN307 pin ① (Y OUT) or checkpoint array pin (A8) (CAM Y)
Measuring instrument	Oscilloscope
Adjustment page	F
Adjustment address	0D (SHP LEVEL)
Specified value	40±5mV

[Adjustment Method]

1) Turn the focusing ring to maximize the aperture level (waveform peak).
2) Select the adjustment page F and the adjustment address 0D with the adjustment remote control.
3) Change the adjustment data with the adjustment remote control to set the aperture level (lower peak between "green" and "white") to a point 40±5mV above the pedestal level.
4) Change the adjustment address in order to store the adjustment data.

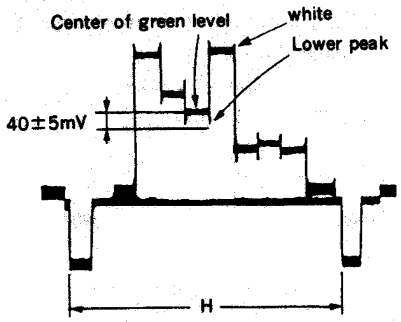

Fig. 9-26.

9-3-19. Max. Gain Adjustment (VC-99 Board)

Object	Color bar chart standard picture frame
Filter	ND filter: 2.6 (0.3+0.4+0.9+1.0)
Measurement point	CN307 pin ① (Y OUT) or checkpoint array pin (A8) (CAM Y)
Measuring instrument	Oscilloscope
Adjustment page	F
Adjustment address	18 (MAX GAIN)
Specified value	150±5mV

[Adjustment Method]

1) Cover the lens with the ND filter 2.6 (0.3+0.4+0.9+1.0).
2) Select the adjustment page F and the adjustment address 18 with the adjustment remote control.
3) Change the adjustment address with the adjustment remote control to adjust the Y signal level to 150±5mV.
4) Change the adjustment address in order to store the adjustment data.

Note: Although the ND filter is combined by using 4 pcs, if your ND filter is combined by using 3 pcs or less, resulting in 2.6, this combination should be available.

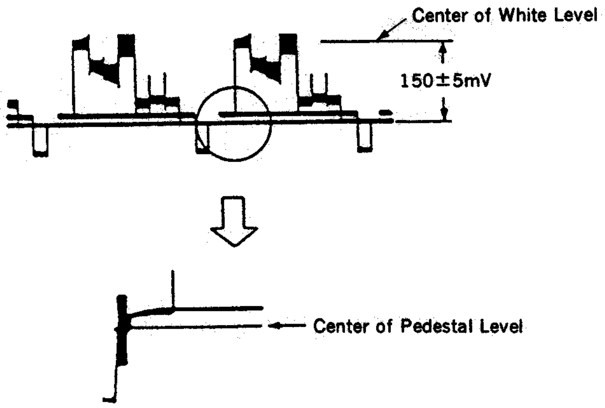

Fig. 9-27.

9-3-20. Burst Level Adjustment (VC-99 Board)

Object	All black (Cover the lens with a black cap.)
Measurement point	CN307 pin ③ (C OUT) or checkpoint array pin (A10) (CAM C)
Measuring instrument	Oscilloscope
Adjustment page	F
Adjustment address	17 (BURST LEVEL)
Specified value	150±5mVp-p

[Adjustment Method]

1) Select the adjustment page F and the adjustment address 17 with the adjustment remote control.
2) Change the adjustment data with the adjustment remote control to adjust the burst level to 150±5mVp-p.
3) Change the adjustment address in order to store the adjustment data.

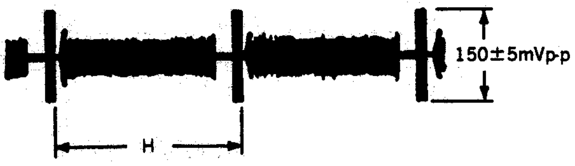

Fig. 9-28.

9-3-21. Standard AE Level Adjustment (AF-86 Board)

Object	Color bar chart standard picture frame, All black (Cover with a black cap)
Measurement point	CN801
Measuring instrument	AF microcomputer data reader jig
Adjustment page	F
Adjustment address	60 (IRIS REF-NOR) 8C 61 (IRIS REF-PO) 62 (IRIS REF-SP)
Specified value	$(D_{60}-D_{8C}) > 24$

[Adjustment Method]

1) Set the adjustment page F with the adjustment remote control.
2) Set the adjustment address EB and the adjustment data 13 with the adjustment remote control.
3) Change the adjustment address 60.
4) Input the value of the AF microcomputer data reader jig to the adjustment address 60. (This adjustment data of the adjustment address is set to D_{60})
5) Make all black. (Cover with a black cap)
6) Input the value of the AF microcomputer data reader jig to the adjustment address 8C. (This adjustment data of the adjustment address 8C is set to D_{8C})
7) Check that it is $(D_{60}-D_{8C}) > 24$. When the value of $(D_{60}-D_{8C})$ is between 21 and 24, set the adjustment address each 76 and 71 and the adjustment data 05 from 06.
8) Input the value of $(D_{60}-08)$ to the adjustment address 61 and 62.

Example)

The adjustment data D_{60} of the adjustment address 60		The input value of the adjustment address 61 and 62
5A	→	52
5B	→	53
5C	→	54

9) Set the adjustment address EB and the adjustment data 00 with the adjustment remote control.
10) Change the adjustment address in order to store the adjustment data.

9-3-22 (A). Pre-white Balance Adjustment (With Vectorscope)

Object	All white pattern
Measurement point	VIDEO OUT terminal of the video block
Measuring instrument	Vectorscope
Adjustment page	F
Adjustment address	05 (R GAIN) 04 (B GAIN)
Specified value	The center of a white bright point must be within a circle of ϕ 1 mm centering around the origin

[Adjustment Method]

1) Maximize the gain of vectorscope.
2) Select the adjustment page F and the adjustment address 05 with the adjustment remote control.
3) Change the adjustment data with the adjustment remote control to coincide the white bright point with the origin.
4) Select the adjustment address 04.
5) Change the adjustment data to coincide the white bright point with the origin.
6) Repeat the steps 2) through 5).
7) Return the gain of vectorscope to CAL, and make sure that center of the bright point is located inside a circle of 1 mm diameter apart from the origin.
8) Change the adjustment address in order to store the adjustment data.

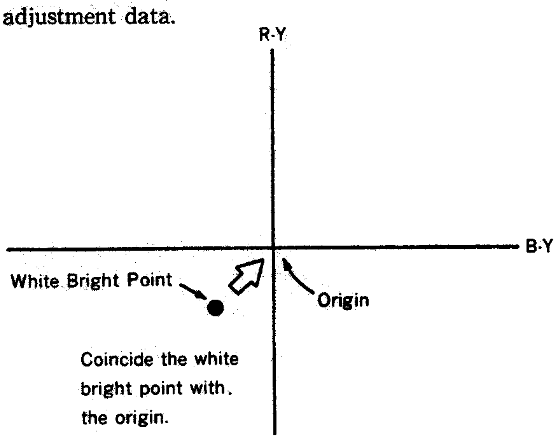

Fig. 9-29.

9-3-22 (B). Pre-white Balance Adjustment (With Oscilloscope) (VC-99 Board)

Object	All white pattern
Measurement point	CN307 pin ③ (C OUT) or checkpoint array pin(A10)(CAM C)
Measuring instrument	Oscilloscope
Adjustment page	F
Adjustment address	05 (R GAIN) 04 (B GAIN)
Specified value	Chroma signal amplitude minimum

[Adjustment Method]

1) Select the adjustment page F and the adjustment address 05 with the adjustment remote control.
2) Change the adjustment data with the adjustment remote control to minimize a chroma signal amplitude.
3) Select the adjustment address 04.
4) Change the adjustment data to minimize the chroma signal amplitude.
5) Repeat the steps 1) through 4).
6) Change the adjustment address in order to store the adjustment data.

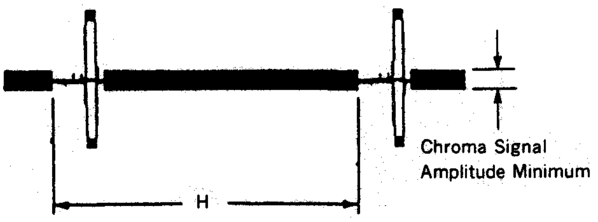

Fig. 9-30.

9-3-23. Color Reproducibility Adjustment (With Vectorscope)

Object	Color bar chart standard picture frame
Measurement point	VIDEO OUT terminal of the video block
Measuring instrument	Vectorscope
Adjustment page	F
Adjustment address	09 (R-Y GAIN) 0A (B-Y GAIN) 0B (R-Y HUE) 0C (B-Y HUE)
Specified value	All color bright points must be within a color reproduction frame.

Note : Burst level adjustment and pre-white balance adjustment must have been completed.

[Adjustment Method]

1) Set the adjustment page F with the adjustment remote control.
2) Change the adjustment data of each adjustment address with the adjustment remote control to collect all the color bright points within the color reproduction frame.
3) Change the adjustment address in order to store the adjustment data.

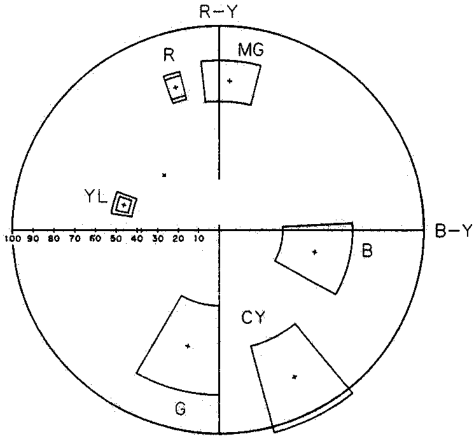

Fig. 9-31.

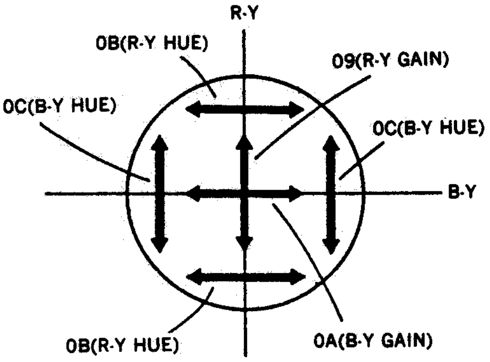

Fig. 9-32. Adjustment Addresses and Bright Point Moving Directions

9-3-24. Auto White Balance Adjustment

Note 1 : Be sure to make "preset adjustment" and "auto white balance adjustment" in that order.

(1) Preset Adjustment

Object	White pattern standard picture frame
Adjustment page	F
Adjustment address	EE (AWB MODE 1)

Note 1 : Make preset adjustment 30 seconds or more after turning on the power.

Note 2 : When redoing preset adjustment, turn off the power once, and then, turn it on again.

[Adjustment Method]

1) Turn off/on the power.
2) Obtain a picture of white pattern for over five seconds. (AF switch is turned off.)
3) Select the adjustment page F with the adjustment remote control.
4) Select the adjustment address EE by the adjustment remote control and set the adjustment data to be 01.
5) Change the adjustment address in order to store the adjustment data. (3200K data fetch 1)
6) Select the adjustment address EE by the adjustment remote control and set the adjustment data to be 23.
7) Change the adjustment address in order to store the adjustment data. (3200K data fetch 2)
8) Check that the LANC data is changed and the adjustment address 95 is selected.
9) Select the adjustment address EE by the adjustment remote control and set the adjustment data to be 00.
10) Change the adjustment address in order to store the adjustment data.
11) Make auto white balance adjustment.

(2) Auto White Balance Adjustment

Note 1 : Be sure to make this adjustment after preset adjustment.

Object	White pattern standard picture frame
Filter	Color temperature compensation filter C14 (C12+C2)
Measuring instrument	Vectorscope
Measurement point	VIDEO OUT terminal
Adjustment page	F
Adjustment address	01 (R CONT) 02 (B CONT) 98 (START R) 99 (START B) 9A (R OUT DOOR) 9B (B OUT DOOR) A0 (Ra) A1 (Rb) A2 (Rc) A3 (Ba) A4 (Bb) A5 (Bc) A6 (R/B TOP) A7 (R/B MDL) A8 (R/B BTM) A9 (B/R TOP) AA (B/R MDL) AB (B/R BTM) B0 (TOP SLP R) B8 (TOP UP) B9 (TOP DWN) BD (R DWN LMT) BE (B DWN LMT) BF (B IN TOP) C0 (B IN MAX) C1 (B OUT MIN) C2 (B OUT DWN)
Specified value	The white and black bright points must coincide.

[Adjustment Method]

1) Select the adjustment page F with the adjustment remote control.
2) Select the adjustment address EE (AWB MODE1) with the adjustment remote control and enter the adjustment data 10. (Set of WB DIRECT)
3) Cover the lens with the C14 filter.
4) Change the adjustment data of the adjustment addresses 01 and 02 with the adjustment remote control to coincide the white bright point with the origin.
   At this time, assume the data of the adjustment address 01 as Rc14 and that of the adjustment address 02 as Bc14.

5) Input the value on the AWB adjustment data list (Refer to page 228) from the value of Rc14 and Bc14 to each address, and then proceed to the item 16). If the value does not come under the list, caluculate the adjustment data by the calculation from item 6).
6) Make that the adjustment address 01 data of the adjustment remote control on the item 4) is C_1 and the adjustment address 02 data is C_2.
7) Convert C_1 into a decimal number to assume it as C_1', and C_2 as well as C_2'. (Refer to Table 9-4 "Hexadecimal-Decimal Conversion Table")
8) Obtain D_{9A}' anb D_{9B}' by the following formula.

   $D_{9A}'=C_1'+2 \qquad D_{9B}'=C_2'+6$
9) Convert D_{9A}' and D_{9B}' into a hexadecimal number and assume its value as D_{9A} and D_{9B}. (Round fractions below a decimal number to the nearest whole number)
10) Select the adjustment address 9A and enter the adjustment data D_{9A}.
11) Select the adjustment address 9B and enter the adjustment data D_{9B}.
12) Obtain A and B in the hexadecimal numbers by the following formula, and convert them into the decimal numbers. The values are A' and B'.

   $A=5A-D_{9A}$

   $B=D_{9B}-50$
13) Obtain the adjustment data of each adjustment address in the decimal numbers by the following formula.

   $D_{A0}'=90-A'\times 1.12$

   $D_{A1}'=D_{9A}'$

   $D_{A2}'=90-A'\times 0.593$

   $D_{98}'=D_{A2}'$

   $D_{BE}'=B'\times 2+80$

   $D_{BF}'=D_{9B}'$

   $D_{C0}'=B'\times 0.84+80$

   $D_{C1}'=D_{C0}'$

   $D_{C2}'=B'\times 0.3+80$

   $D_{A3}'=B'\times 1.34+80$

   $D_{99}'=D_{A5}'$

   $D_{A4}'=D_{9B}'$

   $D_{A5}'=B\times 0.467+80$

   $D_{BD}=90-A'\times 1.67$
14) The above items, calculate by decimal and input by hexadecimal.
15) The below items, calculate by hexadecimal and input the adjustment data to each adjustment address.

   $$D_{A6}=\frac{(D_{A1}-D_{A0})\times 40}{(D_{A3}-D_{A4})}$$

   $$D_{A7}=\frac{(D_{A2}-D_{A1})\times 40}{(D_{A4}-D_{A5})}$$

   $$D_{A8}=\frac{(5A-D_{A2})\times 40}{(D_{A5}-50)}$$

   $$D_{A9}=\frac{(D_{A3}-D_{A4})\times 10}{(D_{A1}-D_{A0})}$$

   $$D_{AA}=\frac{(D_{A4}-D_{A5})\times 10}{(D_{A2}-D_{A1})}$$

   $$D_{AB}=\frac{(D_{A5}-50)\times 10}{(5A-D_{A2})}$$

   $$D_{B0}=D_{A9}$$

   $$D_{B8}=\frac{(D_{A1}+0A)\times D_{A9}+D_{A4}\times 10}{40}$$

   $$D_{B9}=\frac{(D_{A1}-11)\times D_{A9}+D_{A4}\times 10}{40}$$
16) Select the adjustment address EE and enter the adjustment data 00.
17) Change the adjustment address in order to store the adjustment data.

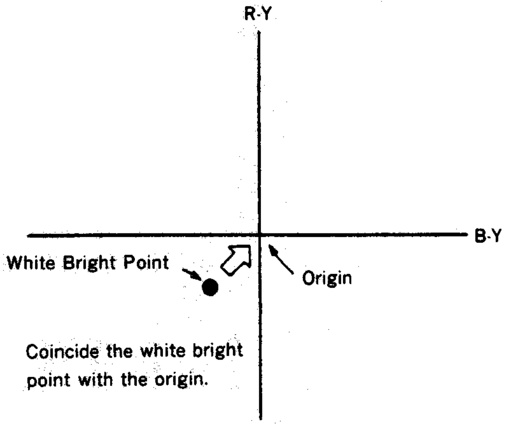

Fig. 9-33.

•AWB Adjustment Data Table

Rc14;Bc14	adr98	99	9A	9B	A0	A1	A2	A3	A4	A5	A6	A7	A8	A9	AA	AB	B0	B8	B9	BD	BE	BF	C0	C1	C2
3D 78	4A	65	3F	7E	3C	3F	4A	8E	7E	65	C	1C	31	55	24	15	55	81	5D	2C	AC	7E	77	77	5E
3D 79	4A	66	3F	7F	3C	3F	4A	8F	7F	66	C	1C	2F	55	24	16	55	81	5D	2C	AE	7F	77	77	5E
3D 7A	4A	66	3F	80	3C	3F	4A	90	80	66	C	1B	2F	55	26	16	55	81	5D	2C	B0	80	78	78	5E
3D 7B	4A	67	3F	81	3C	3F	4A	92	81	67	B	1B	2D	5B	26	17	5B	88	61	2C	B2	81	79	79	5F
3D 7C	4A	67	3F	82	3C	3F	4A	93	82	67	B	1A	2D	5B	27	17	5B	88	62	2C	B4	82	7A	7A	5F
3D 7D	4A	68	3F	83	3C	3F	4A	94	83	68	B	1A	2B	5B	27	18	5B	88	62	2C	B6	83	7B	7B	5F
3D 7E	4A	68	3F	84	3C	3F	4A	96	84	68	B	19	2B	60	29	18	60	8F	66	2C	B8	84	7C	7C	60
3D 7F	4A	69	3F	85	3C	3F	4A	97	85	69	B	19	29	60	29	19	60	8F	66	2C	BA	85	7D	7D	60
3D 80	4A	69	3F	86	3C	3F	4A	98	86	69	B	18	29	60	2A	19	60	8F	67	2C	BC	86	7D	7D	60
3D 81	4A	6A	3F	87	3C	3F	4A	9A	87	6A	A	18	27	65	2A	1A	65	95	6B	2C	BE	87	7E	7E	61
3D 82	4A	6A	3F	88	3C	3F	4A	9B	88	6A	A	17	27	65	2C	1A	65	96	6B	2C	C0	88	7F	7F	61
3D 83	4A	6B	3F	89	3C	3F	4A	9C	89	6B	A	17	26	65	2C	1B	65	96	6B	2C	C2	89	80	80	61
3D 84	4A	6B	3F	8A	3C	3F	4A	9E	8A	6B	A	17	26	6B	2D	1B	6B	9C	6F	2C	C4	8A	81	81	61
3D 85	4A	6C	3F	8B	3C	3F	4A	9F	8B	6C	A	17	25	6B	2D	1C	6B	9C	6F	2C	C6	8B	82	82	62
3D 86	4A	6C	3F	8C	3C	3F	4A	A0	8C	6C	A	16	25	6B	2F	1C	6B	9D	70	2C	C8	8C	82	82	62
3D 87	4A	6C	3F	8D	3C	3F	4A	A2	8D	6C	9	15	25	70	30	1C	70	A3	74	2C	CA	8D	83	83	62
3D 88	4A	6D	3F	8E	3C	3F	4A	A3	8E	6D	9	15	23	70	30	1D	70	A3	74	2C	CC	8E	84	84	63
3D 89	4A	6D	3F	8F	3C	3F	4A	A4	8F	6D	9	15	23	70	31	1D	70	A4	74	2C	CE	8F	85	85	63
3D 8A	4A	6E	3F	90	3C	3F	4A	A6	90	6E	9	15	22	75	31	1E	75	AA	78	2C	D0	90	86	86	63
3D 8B	4A	6E	3F	91	3C	3F	4A	A7	91	6E	9	14	22	76	33	1E	75	AA	79	2C	D2	91	87	87	64
3E 78	4B	65	40	7E	3D	40	4B	8E	7E	65	C	1C	2E	55	24	16	55	82	5E	2E	AC	7E	77	77	5E
3E 79	4B	66	40	7F	3D	40	4B	8F	7F	66	C	1C	2C	55	24	17	55	82	5E	2E	AE	7F	77	77	5E
3E 7A	4B	66	40	80	3D	40	4B	90	80	66	C	1B	2C	55	26	17	55	83	5F	2E	B0	80	78	78	5E
3E 7B	4B	67	40	81	3D	40	4B	92	81	67	B	1B	2A	5B	26	19	5B	89	63	2E	B2	81	79	79	5F
3E 7C	4B	67	40	82	3D	40	4B	93	82	67	B	1A	2A	5B	27	19	5B	89	63	2E	B4	82	7A	7A	5F
3E 7D	4B	68	40	83	3D	40	4B	94	83	68	B	1A	28	5B	27	1A	5B	8A	63	2E	B6	83	7B	7B	5F
3E 7E	4B	68	40	84	3D	40	4B	96	84	68	B	19	28	60	29	1A	60	90	68	2E	B8	84	7C	7C	60
3E 7F	4B	69	40	85	3D	40	4B	97	85	69	B	19	26	60	29	1B	60	90	68	2E	BA	85	7D	7D	60
3E 80	4B	69	40	86	3D	40	4B	98	86	69	B	18	26	60	2A	1B	60	91	68	2E	BC	86	7D	7D	60
3E 81	4B	6A	40	87	3D	40	4B	9A	87	6A	A	18	25	65	2A	1C	65	97	6C	2E	BE	87	7E	7E	61
3E 82	4B	6A	40	88	3D	40	4B	9B	88	6A	A	17	25	65	2C	1C	65	97	6C	2E	C0	88	7F	7F	61
3E 83	4B	6B	40	89	3D	40	4B	9C	89	6B	A	17	24	65	2C	1D	66	97	6D	2E	C2	89	80	80	61
3E 84	4B	6B	40	8A	3D	40	4B	9E	8A	6B	A	17	24	6B	2D	1D	6B	9E	71	2E	C4	8A	81	81	61
3E 85	4B	6C	40	8B	3D	40	4B	9F	8B	6C	A	17	22	6B	2D	1E	6B	9E	71	2E	C6	8B	82	82	62
3E 86	4B	6C	40	8C	3D	40	4B	A0	8C	6C	A	16	22	6B	2F	1E	6B	9E	71	2E	C8	8C	82	82	62
3E 87	4B	6C	40	8D	3D	40	4B	A2	8D	6C	9	15	22	70	30	1E	70	A5	76	2E	CA	8D	83	83	62
3E 88	4B	6D	40	8E	3D	40	4B	A3	8E	6D	9	15	21	70	30	1F	70	A5	76	2E	CC	8E	84	84	63
3E 89	4B	6D	40	8F	3D	40	4B	A4	8F	6D	9	15	21	70	31	1F	70	A5	76	2E	CE	8F	85	85	63
3E 8A	4B	6E	40	90	3D	40	4B	A6	90	6E	9	15	20	75	31	20	75	AC	7A	2E	D0	90	86	86	63
3E 8B	4B	6E	40	91	3D	40	4B	A7	91	6E	9	14	20	75	33	20	75	AC	7A	2E	D2	91	87	87	64
3F 78	4B	65	41	7E	3E	41	4B	8E	7E	65	C	1A	2E	55	28	16	55	84	60	30	AC	7E	77	77	5E
3F 79	4B	66	41	7F	3E	41	4B	8F	7F	66	C	1A	2C	55	28	17	55	84	60	30	AE	7F	77	77	5E
3F 7A	4B	66	41	80	3E	41	4B	90	80	66	C	19	2C	55	2A	17	55	84	60	30	B0	80	78	78	5E
3F 7B	4B	67	41	81	3E	41	4B	92	81	67	B	19	2A	5B	2A	19	5B	8B	64	30	B2	81	79	79	5F
3F 7C	4B	67	41	82	3E	41	4B	93	82	67	B	18	2A	5B	2B	19	5B	8B	65	30	B4	82	7A	7A	5F
3F 7D	4B	68	41	83	3E	41	4B	94	83	68	B	18	28	5B	2B	1A	5B	8B	65	30	B6	83	7B	7B	5F
3F 7E	4B	68	41	84	3E	41	4B	96	84	68	B	17	28	60	2D	1A	60	92	69	30	B8	84	7C	7C	60
3F 7F	4B	69	41	85	3E	41	4B	97	85	69	B	17	26	60	2D	1B	60	92	69	30	BA	85	7D	7D	60
3F 80	4B	69	41	86	3E	41	4B	98	86	69	B	16	26	60	2E	1B	60	92	6A	30	BC	86	7D	7D	60
3F 81	4B	6A	41	87	3E	41	4B	9A	87	6A	A	16	25	65	2E	1C	65	99	6E	30	BE	87	7E	7E	61
3F 82	4B	6A	41	88	3E	41	4B	9B	88	6A	A	15	25	65	30	1C	65	99	6E	30	C0	88	7F	7F	61
3F 83	4B	6B	41	89	3E	41	4B	9C	89	6B	A	15	24	65	30	1D	65	99	6E	30	C2	89	80	80	61
3F 84	4B	6B	41	8A	3E	41	4B	9E	8A	6B	A	15	24	6B	32	1D	6B	A0	73	30	C4	8A	81	81	61
3F 85	4B	6C	41	8B	3E	41	4B	9F	8B	6C	A	15	22	6B	32	1E	6B	A0	73	30	C6	8B	82	82	62

Rc14	Bc14	adr98	99	9A	9B	A0	A1	A2	A3	A4	A5	A6	A7	A8	A9	AA	AB	B0	B8	B9	BD	BE	BF	C0	C1	C2
3F	86	4B	6C	41	8C	3E	41	4B	A0	8C	6C	A	14	22	6B	33	1E	6B	A0	73	30	C8	8C	82	82	62
3F	87	4B	6C	41	8D	3E	41	4B	A2	8D	6C	9	13	22	70	35	1E	70	A7	77	30	CA	8D	83	83	62
3F	88	4B	6D	41	8E	3E	41	4B	A3	8E	6D	9	13	21	70	35	1F	70	A7	78	30	CC	8E	84	84	63
3F	89	4B	6D	41	8F	3E	41	4B	A4	8F	6D	9	13	21	70	36	1F	70	A7	78	30	CE	8F	85	85	63
3F	8A	4B	6E	41	90	3E	41	4B	A6	90	6E	9	13	20	75	36	20	75	AE	7C	30	D0	90	86	86	63
3F	8B	4B	6E	41	91	3E	41	4B	A7	91	6E	9	12	20	75	38	20	75	AE	7C	30	D2	91	87	87	64
40	78	4C	65	42	7E	3F	42	4C	8E	7E	65	C	1A	2B	55	28	18	55	85	61	31	AC	7E	77	77	5E
40	79	4C	66	42	7F	3F	42	4C	8F	7F	66	C	1A	29	55	28	19	55	85	61	31	AE	7F	77	77	5E
40	7A	4C	66	42	80	3F	42	4C	90	80	66	C	19	29	55	2A	19	55	85	61	31	B0	80	78	78	5E
40	7B	4C	67	42	81	3F	42	4C	92	81	67	B	19	27	5B	2A	1A	5B	8C	66	31	B2	81	79	79	5F
40	7C	4C	67	42	82	3F	42	4C	93	82	67	B	18	27	5B	2B	1A	5B	8C	66	31	B4	82	7A	7A	5F
40	7D	4C	68	42	83	3F	42	4C	94	83	68	B	18	25	5B	2B	1B	5B	8C	66	31	B6	83	7B	7B	5F
40	7E	4C	68	42	84	3F	42	4C	96	84	68	B	17	25	60	2D	1B	60	93	6B	31	B8	84	7C	7C	60
40	7F	4C	69	42	85	3F	42	4C	97	85	69	B	17	24	60	2D	1D	60	93	6B	31	BA	85	7D	7D	60
40	80	4C	69	42	86	3F	42	4C	98	86	69	B	16	24	60	2E	1D	60	94	6B	31	BC	86	7D	7D	60
40	81	4C	6A	42	87	3F	42	4C	9A	87	6A	A	16	22	65	2E	1E	65	9A	6F	31	BE	87	7E	7E	61
40	82	4C	6A	42	88	3F	42	4C	9B	88	6A	A	15	22	65	30	1E	65	9A	70	31	C0	88	7F	7F	61
40	83	4C	6B	42	89	3F	42	4C	9C	89	6B	A	15	21	65	30	1F	65	9B	70	31	C2	89	80	80	61
40	84	4C	6B	42	8A	3F	42	4C	9E	8A	6B	A	15	21	6B	32	1F	6B	A1	74	31	C4	8A	81	81	61
40	85	4C	6C	42	8B	3F	42	4C	9F	8B	6C	A	15	20	6B	32	20	6B	A1	74	31	C6	8B	82	82	62
40	86	4C	6C	42	8C	3F	42	4C	A0	8C	6C	A	14	20	6B	33	20	6B	A2	75	31	C8	8C	82	82	62
40	87	4C	6C	42	8D	3F	42	4C	A2	8D	6C	9	13	20	70	35	20	70	A8	79	31	CA	8D	83	83	62
40	88	4C	6D	42	8E	3F	42	4C	A3	8E	6D	9	13	1F	70	35	21	70	A9	79	31	CC	8E	84	84	63
40	89	4C	6D	42	8F	3F	42	4C	A4	8F	6D	9	13	1F	70	36	21	70	A9	7A	31	CE	8F	85	85	63
40	8A	4C	6E	42	90	3F	42	4C	A6	90	6E	9	13	1E	75	36	22	75	AF	7E	31	D0	90	86	86	63
40	8B	4C	6E	42	91	3F	42	4C	A7	91	6E	9	12	1E	76	38	22	75	B0	7E	31	D2	91	87	87	64
41	78	4C	65	43	7E	40	43	4C	8E	7E	65	C	17	2B	55	2C	18	55	86	62	33	AC	7E	77	77	5E
41	79	4C	66	43	7F	40	43	4C	8F	7F	66	C	17	29	55	2C	19	55	86	62	33	AE	7F	77	77	5E
41	7A	4C	66	43	80	40	43	4C	90	80	66	C	16	29	55	2E	19	55	87	63	33	B0	80	78	78	5E
41	7B	4C	67	43	81	40	43	4C	92	81	67	B	16	27	5B	2E	1A	5B	8D	67	33	B2	81	79	79	5F
41	7C	4C	67	43	82	40	43	4C	93	82	67	B	15	27	5B	30	1A	5B	8E	67	33	B4	82	7A	7A	5F
41	7D	4C	68	43	83	40	43	4C	94	83	68	B	15	25	5B	30	1B	5B	8E	68	33	B6	83	7B	7B	5F
41	7E	4C	68	43	84	40	43	4C	96	84	68	B	15	25	60	32	1B	60	95	6C	33	B8	84	7C	7C	60
41	7F	4C	69	43	85	40	43	4C	97	85	69	B	15	24	60	32	1D	60	95	6C	33	BA	85	7D	7D	60
41	80	4C	69	43	86	40	43	4C	98	86	69	B	14	24	60	34	1D	60	95	6D	33	BC	86	7D	7D	60
41	81	4C	6A	43	87	40	43	4C	9A	87	6A	A	14	22	65	34	1E	65	9C	71	33	BE	87	7E	7E	61
41	82	4C	6A	43	88	40	43	4C	9B	88	6A	A	13	22	65	35	1E	65	9C	71	33	C0	88	7F	7F	61
41	83	4C	6B	43	89	40	43	4C	9C	89	6B	A	13	21	65	35	1F	65	9C	71	33	C2	89	80	80	61
41	84	4C	6B	43	8A	40	43	4C	9E	8A	6B	A	13	21	6B	37	1F	6B	A3	76	33	C4	8A	81	81	61
41	85	4C	6C	43	8B	40	43	4C	9F	8B	6C	A	13	20	6B	37	20	6B	A3	76	33	C6	8B	82	82	62
41	86	4C	6C	43	8C	40	43	4C	A0	8C	6C	A	12	20	6B	39	20	6B	A3	76	33	C8	8C	82	82	62
41	87	4C	6C	43	8D	40	43	4C	A2	8D	6C	9	11	20	70	3B	20	70	AA	7B	33	CA	8D	83	83	62
41	88	4C	6D	43	8E	40	43	4C	A3	8E	6D	9	11	1F	70	3B	21	70	AA	7B	33	CC	8E	84	84	63
41	89	4C	6D	43	8F	40	43	4C	A4	8F	6D	9	11	1F	70	3C	21	70	AB	7B	33	CE	8F	85	85	63
41	8A	4C	6E	43	90	40	43	4C	A6	90	6E	9	11	1E	75	3C	22	75	B1	80	33	D0	90	86	86	63
41	8B	4C	6E	43	91	40	43	4C	A7	91	6E	9	10	1E	75	3E	22	75	B1	80	33	D2	91	87	87	64
42	78	4D	65	44	7E	41	44	4D	8E	7E	65	C	17	28	55	2C	1A	55	88	64	35	AC	7E	77	77	5E
42	79	4D	66	44	7F	41	44	4D	8F	7F	66	C	17	26	65	2C	1B	55	88	64	35	AE	7F	77	77	5E
42	7A	4D	66	44	80	41	44	4D	90	80	66	C	16	26	55	2E	1B	55	88	64	35	B0	80	78	78	5E
42	7B	4D	67	44	81	41	44	4D	92	81	67	B	16	24	5B	2E	1C	5B	8F	69	35	B2	81	79	79	5F
42	7C	4D	67	44	82	41	44	4D	93	82	67	B	15	24	5B	30	1C	5B	8F	69	35	B4	82	7A	7A	5F
42	7D	4D	68	44	83	41	44	4D	94	83	68	B	15	23	5B	30	1E	5B	8F	69	35	B6	83	7B	7B	5F
42	7E	4D	68	44	84	41	44	4D	96	84	68	B	15	23	60	32	1E	60	96	6E	35	B8	84	7C	7C	60
42	7F	4D	69	44	85	41	44	4D	97	85	69	B	15	21	60	32	1F	60	96	6E	35	BA	85	7D	7D	60

Rc14;Bc14		adr98	99	9A	9B	A0	A1	A2	A3	A4	A5	A6	A7	A8	A9	AA	AB	B0	B8	B9	BD	BE	BF	C0	C1	C2
42	80	4D	69	44	86	41	44	4D	98	86	69	B	14	21	60	34	1F	60	97	6E	35	BC	86	7D	7D	60
42	81	4D	6A	44	87	41	44	4D	9A	87	6A	A	14	20	65	34	20	65	9D	73	35	BE	87	7E	7E	61
42	82	4D	6A	44	88	41	44	4D	9B	88	6A	A	13	20	65	35	20	65	9E	73	35	C0	88	7F	7F	61
42	83	4D	6B	44	89	41	44	4D	9C	89	6B	A	13	1F	65	35	21	65	9E	73	35	C2	89	80	80	61
42	84	4D	6B	44	8A	41	44	4D	9E	8A	6B	A	13	1F	6B	37	21	6B	A5	78	35	C4	8A	81	81	61
42	85	4D	6C	44	8B	41	44	4D	9F	8B	6C	A	13	1E	6B	37	22	6B	A5	78	35	C6	8B	82	82	62
42	86	4D	6C	44	8C	41	44	4D	A0	8C	6C	A	12	1E	6D	39	22	6B	A5	78	35	C8	8C	82	82	62
42	87	4D	6C	44	8D	41	44	4D	A2	8D	6C	9	11	1E	70	3B	22	70	AC	7D	35	CA	8D	83	83	62
42	88	4D	6D	44	8E	41	44	4D	A3	8E	6D	9	11	1D	70	3B	24	70	AC	7D	35	CC	8E	84	84	63
42	89	4D	6D	44	8F	41	44	4D	A4	8F	6D	9	11	1D	70	3C	24	70	AC	7D	35	CE	8F	86	85	63
42	8A	4D	6E	44	90	41	44	4D	A6	90	6E	9	11	1C	75	3C	25	75	B3	82	35	D0	90	86	86	63
42	8B	4D	6E	44	91	41	44	4D	A7	91	6E	9	10	1C	75	3E	25	75	B3	82	35	D2	91	87	87	64
43	78	4E	65	45	7E	42	45	4E	8E	7E	65	C	17	25	55	2C	1C	55	89	65	36	AC	7E	77	77	5E
43	79	4E	66	45	7F	42	45	4E	8F	7F	66	C	17	23	55	2C	1D	55	89	65	36	AE	7F	77	77	5E
43	7A	4E	66	45	80	42	45	4E	90	80	66	C	16	23	55	2E	1D	55	89	65	36	B0	80	78	78	5E
43	7B	4E	67	45	81	42	45	4E	92	81	67	B	16	21	5B	2E	1F	5B	90	6A	36	B2	81	79	79	5F
43	7C	4E	67	45	82	42	45	4E	93	82	67	B	15	21	5B	30	1F	5B	90	6A	36	B4	82	7A	7A	5F
43	7D	4E	68	45	83	42	45	4E	94	83	68	B	15	20	5B	30	20	5B	91	6A	36	B6	83	7B	7B	5F
43	7E	4E	68	45	84	42	45	4E	96	84	68	B	15	20	60	32	20	60	98	6F	36	B8	84	7C	7C	60
43	7F	4E	69	45	85	42	45	4E	97	85	69	B	15	1F	60	32	21	60	98	6F	36	BA	85	7D	7D	60
43	80	4E	69	45	86	42	45	4E	98	86	69	B	14	1F	60	34	21	60	98	70	36	BC	86	7D	7D	60
43	81	4E	6A	45	87	42	45	4E	9A	87	6A	A	14	1E	65	34	23	65	9F	74	36	BE	87	7E	7E	61
43	82	4E	6A	45	88	42	45	4E	9B	88	6A	A	13	1E	65	35	23	65	9F	74	36	C0	88	7F	7F	61
43	83	4E	6B	45	89	42	45	4E	9C	89	6B	A	13	1C	65	35	24	65	9F	75	36	C2	89	80	80	61
43	84	4E	6B	45	8A	42	45	4E	9E	8A	6B	A	13	1C	6B	37	24	6B	A6	79	36	C4	8A	81	81	61
43	85	4E	6C	45	8B	42	45	4E	9F	8B	6C	A	13	1B	6B	37	25	6B	A6	79	36	C6	8B	82	82	62
43	86	4E	6C	45	8C	42	45	4E	A0	8C	6C	A	12	1B	6B	39	25	6B	A7	7A	36	C8	8C	82	82	62
43	87	4E	6C	45	8D	42	45	4E	A2	8D	6C	9	11	1B	70	3B	25	70	AE	7E	36	CA	8D	83	83	62
43	88	4E	6D	45	8E	42	45	4E	A3	8E	6D	9	11	1A	70	3B	27	70	AE	7F	36	CC	8E	84	84	63
43	89	4E	6D	45	8F	42	45	4E	A4	8F	6D	9	11	1A	70	3C	27	70	AE	7F	36	CE	8F	85	85	63
43	8A	4E	6E	45	90	42	45	4E	A6	90	6E	9	11	1A	75	3C	28	75	B5	83	36	D0	90	86	86	63
43	8B	4E	6E	45	91	42	45	4E	A7	91	6E	9	10	1A	75	3E	28	75	B5	84	36	D2	91	87	87	64
44	78	4E	65	46	7E	44	46	4E	8E	7E	65	8	14	25	80	32	1C	80	C0	8A	38	AC	7E	77	77	5E
44	79	4E	66	46	7F	44	46	4E	8F	7F	66	8	14	23	80	32	1D	80	C0	8A	38	AE	7F	77	77	5E
44	7A	4E	66	46	80	44	46	4E	90	80	66	8	14	23	80	34	1D	80	C0	8A	38	B0	80	78	78	5E
44	7B	4E	67	46	81	44	46	4E	92	81	67	8	14	21	88	34	1F	88	CA	91	38	B2	81	79	79	5F
44	7C	4E	67	46	82	44	46	4E	93	82	67	8	13	21	88	36	1F	88	CB	91	38	B4	82	7A	7A	5F
44	7D	4E	68	46	83	44	46	4E	94	83	68	8	13	20	88	36	20	88	CB	91	38	B6	83	7B	7B	5F
44	7E	4E	68	46	84	44	46	4E	96	84	68	7	12	20	90	38	20	90	D5	98	38	B8	84	7C	7C	60
44	7F	4E	69	46	85	44	46	4E	97	85	69	7	12	1F	90	38	21	90	D5	99	38	BA	85	7D	7D	60
44	80	4E	69	46	86	44	46	4E	98	86	69	7	12	1F	90	3A	21	90	D6	99	38	BC	86	7D	7D	60
44	81	4E	6A	46	87	44	46	4E	9A	87	6A	7	12	1E	98	3A	23	98	E0	A0	38	BE	87	7E	7E	61
44	82	4E	6A	46	88	44	46	4E	9B	88	6A	7	11	1E	98	3C	23	98	E0	A0	38	C0	88	7F	7F	61
44	83	4E	6B	46	89	44	46	4E	9C	89	6B	7	11	1C	98	3C	24	98	E0	A0	38	C2	89	80	80	61
44	84	4E	6B	46	8A	44	46	4E	9E	8A	6B	6	11	1C	A0	3E	24	A0	EB	A7	38	C4	8A	81	81	61
44	85	4E	6C	46	8B	44	46	4E	9F	8B	6C	6	11	1B	A0	3E	25	A0	EB	A7	38	C6	8B	82	82	62
44	86	4E	6C	46	8C	44	46	4E	A0	8C	6C	6	10	1B	A0	40	25	A0	EB	A8	38	C8	8C	82	82	62
44	87	4E	6C	46	8D	44	46	4E	A2	8D	6C	6	10	1B	A8	42	25	A8	F5	AE	38	CA	8D	83	83	62
44	88	4E	6D	46	8E	44	46	4E	A3	8E	6D	6	10	1A	A8	42	27	A8	F6	AF	38	CC	8E	84	84	63
44	89	4E	6D	46	8F	44	46	4E	A4	8F	6D	6	F	1A	A8	44	27	A8	F6	AF	38	CE	8F	85	85	63
44	8A	4E	6E	46	90	44	46	4E	A6	90	6E	6	F	1A	B0	44	28	B0	100	B6	38	D0	90	86	86	63
44	8B	4E	6E	46	91	44	46	4E	A7	91	6E	6	F	1A	B0	46	28	B0	100	B6	38	D2	91	87	87	64

9-3-25. Outdoor White Balance Check

Object	White pattern standard picture frame
Filter	Color temperature compensation filter C14 (C12+C2)
Measurement point	VIDEO OUT terminal of the video block
Measuring instrument	Vectorscope
Specified value	Refer to Fig 9-34.

[Check Method]

1) Press the White Balance button to select the outdoor white balance mode. (A mark "☼" appears on the EVF screen or monitor screen (when the data screen is turned on)).
2) Check that the center of the white bright point is within the circumference shown in Fig. 9-34.

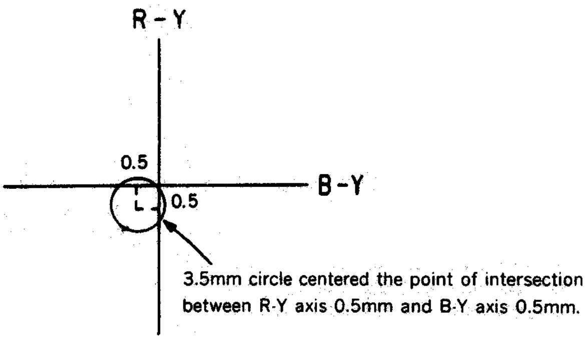

Fig. 9-34.

9-3-26. Focus Motor Speed Adjustment (AF-86 Board)

Object	Optional
Measurement point	CN801
Measuring instrument	AF microcomputer data reader jig
Adjustment page	F
Adjustment address	5D (MAN F SPEED) 4A (ADJ PWM) 2B (M SPEED-B) 2C (M SPEED-C) 2D (M SPEED-D) 2A (M SPEED-A) 2E (M SPEED-E) 5C (MAN PWM SPEED)

[Adjustment Method]

1) Set the auto mode with the FOCUS button.
2) Select the adjustment page F with the adjustment remote control.
3) Select the adjustment address EB with the adjustment remote control and set the adjustment data to F5.
4) Balance the adjustment data at the adjustment address 5D so that the data indicated by the AF microcomputer data reader jig is changed from 0D to 0E after two seconds have elapsed.
5) Balance the adjustment data at the adjustment address 4A so that the data indicated by the AF microcomputer data reader jig is between 4B and 4F. (This adjustment data is assumed as LSP.)
6) Convert LSP into decimal data and assume it as LSP'.
7) Perform the following calculations in decimal form. Round down the results and convert them into hexadecimal data. Then input the data into the adjustment data at the respective adjustment addresses.

adjustment address 2B : $LSP'+\frac{255-LSP'}{0.81}\times 0.05$

adjustment address 2C : $LSP'+\frac{255-LSP'}{0.81}\times 0.13$

adjustment address 2D : $LSP'+\frac{255-LSP'}{0.81}\times 0.31$

8) Input the adjustment data as follows:
   adjustment address 2A : LSP (the data of adjustment address 4A)
   adjustment address 2E : FF
   adjustment address 5C : the data of adjustment address 2D
9) Select the adjustment address EB with the adjustment remote control and set the adjustment data 00.
10) Change the adjustment address in order to store the adjustment data.

9-3-27. AF Adjustment

[Preparation]

1) Set the distance from the pattern box to the lens reference mark (Φ) to 1.5m. Then, place the zoom lever in the color bar chart standard picture frame position.

(1)AF Data Input (AF-86 Board)

Object	Siemens star chart standard picture frame, All black (Cover with a black cap), White pattern standard picture frame.
Filter	ND filter : 1.5 (0.1+0.4+1.0)
Measurement point	CN801
Measuring instrument	AF microcomputer data reader jig
Adjustment page	F
Adjustment address	27 (AGC HD) 26 (AGC MD) 30 (PA SET) 28 (LD-B) 29 (HD-B) 46 (AGC CONT W) 45 (AGC CONT B)

[Adjustment Method]

1) Place the system in the siemens star chart standard picture frame state.
2) Set the manual mode with the FOCUS button.
3) Attach the ND filter 1.5 (0.1+0.4+1.0) to the front of the lens.
4) Set the focus ring to the 1.2m and set the auto mode with the FOCUS button.
5) After 2.0 seconds, confirm that the picture of siemens star is taken clearly. Set the manual mode with the FOCUS button.
6) Detach the ND filter.
7) Select the adjustment page F with the adjustment remote control.
8) Select the adjustment address EB with the adjustment remote control and set the adjustment data to EF.
9) Change the adjustment address in order to store the adjustment data.
10) Wait until the data indicated by the AF microcomputer data reader jig data is stable (for about 1 second). Change the adjustment data at the adjustment address 27, then balance so that the data indicated by the AF microcomputer data reader jig is between B5 and BD.
11) Select the adjustment address EB with the adjustment remote control and set the adjustment data to ED.
12) Change the adjustment address in order to store the adjustment data.
13) Change the adjustment data at the adjustment address 26. Balance so that the data indicated by the AF microcomputer data reader jig is between E0 and ED.
14) Input the current readout of the AF microcomputer data reader jig into the adjustment data at the adjustment address 30.
15) Cover the lens with black cap.
16) Select the adjustment address EB with the adjustment remote control and set the adjustment data to F1.
17) Change the adjustment address in order to store the adjustment data.
18) If the readout of the AF microcomputer data reader jig is 19 or more, input it into the adjustment data at the adjustment address 28.
    If it is less than 18, input 19.
19) Select the adjustment address EB with the adjustment remote control and set the adjustment data to EF.
20) Change the adjustment address in order to store the adjustment data.
21) If the readout of the AF microcomputer data reader jig is 08 or more, input it into the adjustment data at the adjustment address 29.
    If it is 07 or less, input 08.
22) Select the adjustment address EB with adjustment remote control and set the adjustment data to 0B.
23) Change the adjustment address in order to store the adjustment data.
24) Input the current readout of the AF microcomputer data reader jig into the adjustment data at the adjustment address 46.
25) Detach the black cap and set the white pattern standard picture frame.
26) Input the current readout of the AF microcomputer data reader jig into the adjustment data at the adjustment address 45.
27) Select the adjustment address EB with adjustment remote control and set the adjustment data to 00.
28) Change the adjustment address in order to store the adjustment data.

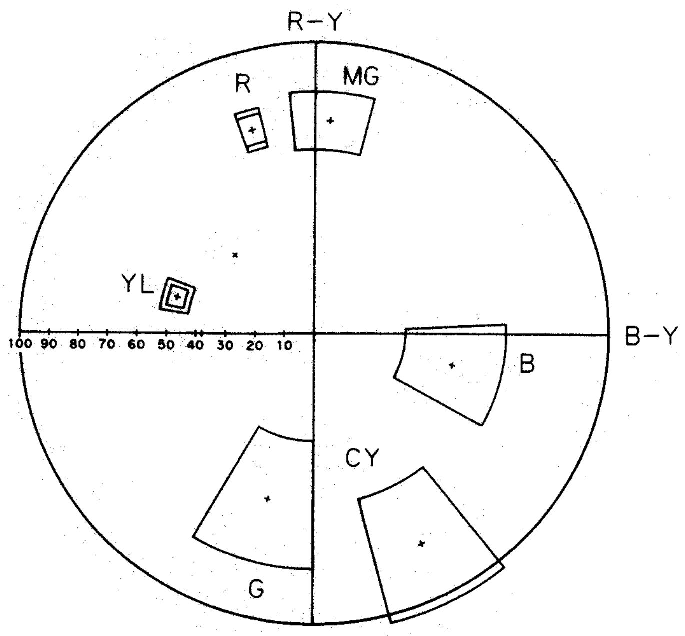

Color Reproducibility Adjustment

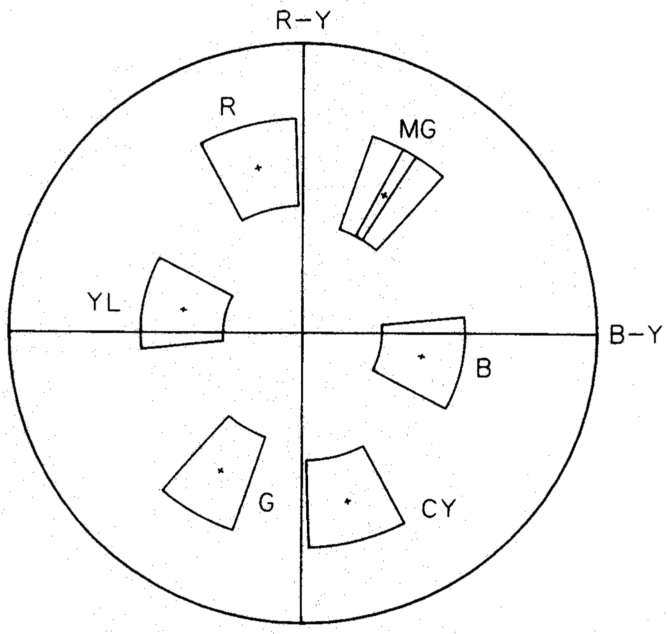

Chroma Phase/Gain Adjustment

CCD-F455E

For Vectorscope

(2)AF Evalution Value Check (AF-86 Board)

Object	Siemens star chart standard picture frame
Filter	ND filter : 1.5 (0.1+0.4+1.0)
Measurement point	CN801
Measuring instrument	AF microcomputer data reader jig
Adjustment page	F

[Checking Method]

1) Set the manual mode with the FOCUS button.
2) Attach the ND filter 1.5 (0.1+0.4+1.0) to the front of the lens.
3) Set the focus ring to the 1.2m and set the auto mode with the FOCUS button.
4) After 2.0 seconds, confirm that the picture of siemens star is taken clearly. Set the manual mode with the FOCUS mode.
5) Select the adjustment page F with the adjustment remote control.
6) Select the adjustment address EB with the adjustment remote control and set the adjustment data to EF.
7) Change the adjustment address in order to store the adjustment data.
8) Confirm that the data of the AF microcomputer data reader jig is between A3 and BD.
9) Select the adjustment address EB with the adjustment remote control and set the adjustment data to ED.
10) Change the adjustment address in order to store the adjustment data.
11) Confirm that the data of the AF microcomputer data reader jig is between D5 and ED.
12) Select the adjustment address EB with the adjustment remote control and set the adjustment data to 00.
13) Change the adjustment address in order to store the adjustment data.

(3)AF Distance Measuring Check (AF-86 Board)

Object	Siemens star chart
Filter	ND filter : 1.5 (0.1+0.4+1.0)

[Checking Methed]

1) Attach the ND filter 1.5 (0.1+0.4+1.0) to the front of the lens.
2) Set the zoom lever to the TELE end and set the manual mode with the FOCUS button.
3) Set the focus ring to the 1.2m and set the auto mode with the FOCUS button.
4) After 2.0 seconds, confirm that the picture of siemens star is taken clear. Set the manual mode with the FOCUS button.
5) Set the focus ring to the ∞ and set the auto mode with the FOCUS button.
6) After 3.0 seconds, confirm that the picture of siemens star is taken clear. Set the manual mode with the FOCUS button.

9-4. DIGITAL TITLER SYSTEM ADJUSTMENT

9-4-1. Chroma Phase/Gain Adjustment (CT-38 Board)

Mode	CAMERA Standby
Object	All Black (Cover the lens with a black cap.)
Measurement point	VIDEO OUT terminal
Measuring instrument	Vectorscope
Adjustment element	RV702
Specified value	Adjust Cy (Cyan) to the specified range. (Check that other colors are also in the specified range.)

[Adjustment Method]

1) Press the SUPERIMPOSE TITLE button (DK-15 board S950).
2) Press the COLOR/MODE button (DK-15 board S952) and select Cy(Cyan).
3) Cover the lens with a black cap.
4) Press MEMORY button (DK-15 board S953) and display the all title.
5) At this time, the specified value should be satisfied.
6) After the adjustment, make R (red), YL (yellow), G (green), MG (magenta), B (blue), and check that the specified value is satisfied.

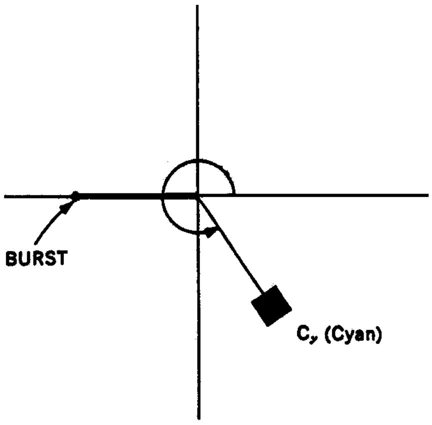

Fig. 9-35.

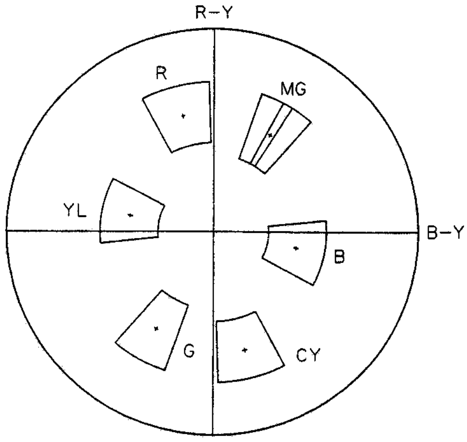

Fig. 9-36.

SECTION 10
ELECTRICAL ADJUSTMENTS (VIDEO SYSTEM)

See the adjusting part location diagram from on page 260 for the adjustment.

10-1. PREPARATION FOR ADJUSTMENT

10-1-1. Equipment Required

The following measuring instruments are needed in adjusting the VTR section.

1) Monitor TV
2) Oscilloscope Dual-trace, Bandwidth more than 10MHz with delay mode (Use a probe of 10 : 1, unless otherwise specified.)
3) Frequency counter
4) Pattern generator (with video output terminal)
5) Digital voltmeter
6) Audio generator
7) Audio level meter
8) Audio distortion meter
9) Audio attenuator
10) Stabilized power supply
11) Alignment tape
    For tracking adjustment (WR5-1CP)*1
    Part number : 8-967-995-07
    For video frequency characteristics adjustment (WR5-6C)*2
    Part number : 8-967-995-17
    For operation check (WR5-4CL)*3
    Part number : 8-967-995-56
    For operation check (WR5-5CSP)*4
    Part number : 8-967-995-47

Note : * 1 : WR5-1C (8-967-995-06)
* 2 : WR5-2C (8-967-995-16)
* 3 : WR5-3CL (8-967-995-36)
* 4 : WR5-3CSP (8-967-995-27)
WR5-4CSP (8-967-995-46)
} You can use these tape.

12) Adjustment remote control (RM-95 Partially remodeled product) (J-6082-053-B)
13) Extension cable (20P) J-6082-063-B (Between VA-67 board CN703 and CT-38 board CN705.)

10-1-2. Precaution for Adjustment

The video section can be also adjusted without the camera section. Remove the camera section by disconnecting the following 5 connectors.

1. VC-99 board CN305
2. DC-DC converter 2P connecter (connect the FU-100 board W991)
3. VC-99 board CN307
4. VC-99 board CN306
5. SS-136 board CN503

Remove the EVF section by disconnecting the following connector.

1. SW-183 board CN931

MIC board (MC-76 board) is not necessary for video section adjustment. Remove the MIC board by disconnecting the following connector.

1. VA-67 board CN401

Setting the switch

1. VA-67 board S201······OUT side (E Model)

10-1-3. Equipment Connection

Unless otherwise specified, adjustment is made in the VTR mode by connecting the measuring instruments as shown in the figure below.

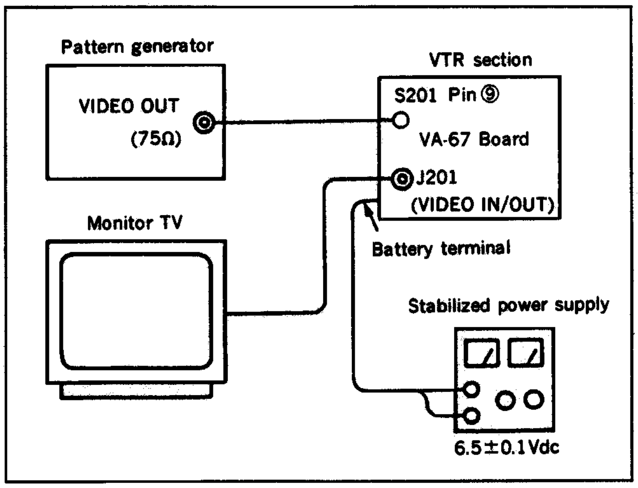

Fig. 10-1.

10-1-4. Setting up for Adjustment

Video signals output from a pattern generator are used as adjustment signals when adjusting the video section, and these video output signals should be within the required standard. Connect an oscilloscope to J201 (VIDEO IN/OUT) on theVA-67 board. Confirm that the amplitudes of video signal SYNC signals, of picture portions, and of burst signals are flat at approximately 0.3, 0.7, and 0.3V respectively, and that the level ratio of the burst signals and "red" signals are 0.30 : 0.66. Fig. 10-2 shows video signals (color burst) used in the video section adjustments.

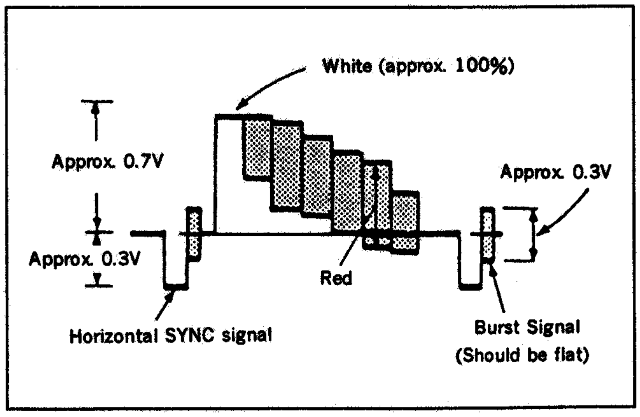

Fig. 10-2.

10-1-5. Alignment tape

<table>
<tr><th>Tape</th><th>Description</th><th>Use for</th></tr>
<tr><td>Tracking
(WR5-1CP)</td><td>1. Recording area PCM to Video
2. Recording content : CH2 : 1MHz linearity adjustment signal
Switching position Adjustment marker (CH1 : 9MHz)</td><td>Drum linearity adjustment</td></tr>
<tr><td>Video frequency response
(WR5-6C)</td><td>1. Recording area Video
2. Recording content RF sweep 0 to 10MHz
3. Marker 1, 3.58, 5.5 and 7MHz</td><td>Frequency response adjustment</td></tr>
<tr><td>Operation cheking
SP mode
(WR5-5CSP)
LP mode
(WR5-4CL)

Note :
PCM area is not included in WR5-4CL</td><td>1. Recording area Video
2. Recording content
■ Video area
● Video signals Color bar : 4min.
Monoscope : 4min.
〔Color bars〕
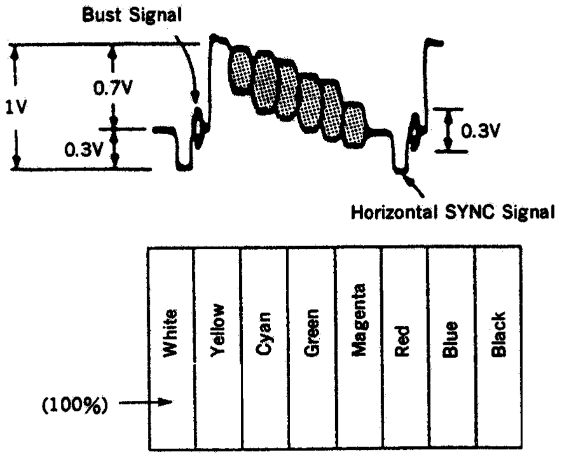

● Audio signal (AFM) 400Hz, 60% modulation
■ PCM area
● Audio signal (PCM)
1kHz, 4 min. Color bar
20Hz, 20 sec.
400Hz, 20 sec. } Monoscope
14kHz. 20 sec.</td><td>Operation checking</td></tr>
</table>

10-1-6. Input/Output Level and impedance

Video input/output Phono jack
1Vp-p, 75Ω unbalance, sync negative

Audio input/output Phono jack
Input : −7.5dBs, input impedance more tham 47kilohms
Output : −7.5dBs, at output impedance less than 1kilohms

(AEP/UK MODEL : Output only
E MODEL : Input/output)

10-1-7. Service Mode

[Tansfer method of the service mode with RM-95]

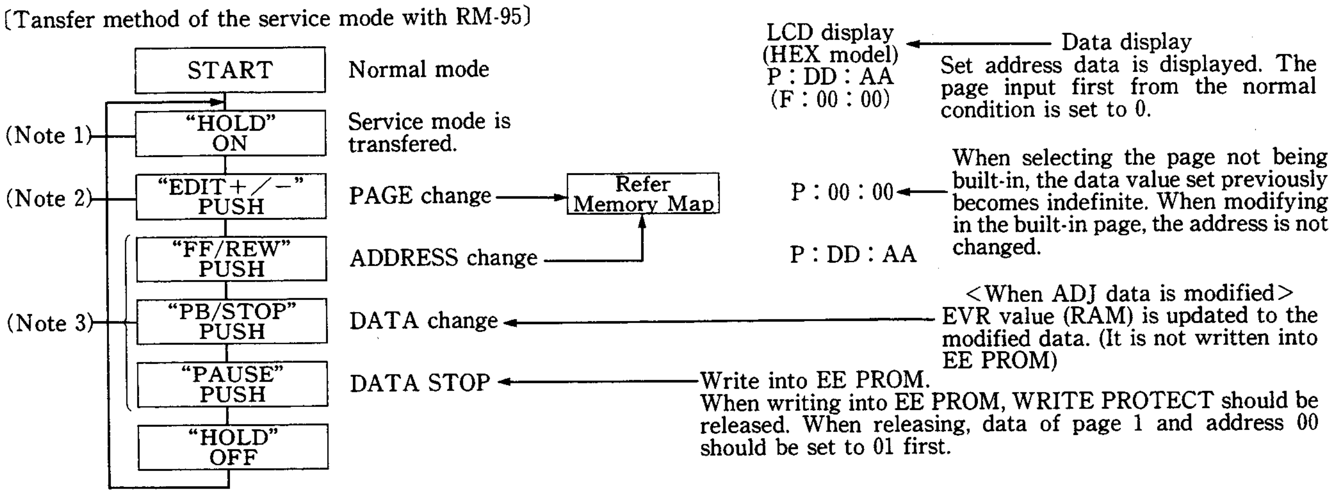

Command name	Command function	Function Button with RM-95
Page Up	Page+ 1	Edit Search+
Page Down	Page− 1	Edit Search−
Direct Page Set	Set to direct page	Event Clear
Address Up	Address+1	Fast Forward
Address Down	Address−1	Rewind
Data Up	Data+ 1	Play Back
Data Down	Data−1	Stop
Store	Write data into EEPROM. RAM	Pause

[ADJUST, TEST MODE description]

MODE		PAGE/DATA/ADDRESS	Contents
ADJUST	Switching Position Adjustment	D : -- : 04 (high) D : -- : 05 (low)	Switching position adjustment See to page 243 for details
ADJUST	Battery Down Adjust-ment	D : -- : 06 (Sensor value) D : -- : 07 (Set value)	Use for battery down adjustment See to page 242 for details
TEST MODE	Pass Adjustment Truck Shift	1 : 30 : 4D	Truck shift for pass adjustment Set to the data described left and set the playback mode.
TEST MODE	Emergency Inhibit	1 : 10 : 4D	Detection of emergency is inhibited. Even if battery is ended, power is not turned off. SP/LP is not automatically distinguished. Emergency detection except for TAPE/TOP•END is inhibited.
TEST MODE	Emergency Code	D : -- : 20~22 D : -- : 24~26	First emergency is dispiayed. Last emergency is displayed. (See to * 1)
TEST MODE	RECOG SW Check	1 : -- : 3D 1 : -- : 3E	Mode switch position is displayed. RECOG SW ON OFF is displayed. (See to * 2)
TEST MODE	Function SW Check	1 : -- : E8~ED	Pressing KEY is checked. (See to * 3)
TEST MODE	Motor single check	3 : 10 : DD (Loading Ⓜ) 3 : 11 : DD (Drum Ⓜ) 3 : 12 : DD (Capstan Ⓜ)	Rotating in right direction, inverting, stopping of each motor can be separately controlled. • Loading Motor • Drum Motor (See to * 4) • Capstan Motor

MODE		PAGE/DATA/ADDRESS	Contents
TEST MODE	Sensor check	3 : 21 : DD	The following sensor is input by performing A/D selecting, and the A/D selecting value can be confirmed. TOP sensor, End sensor, S REEL FG, T REEL FG, Thermistor for SWP correction DEW sensor. (See to * 5)
	Reception contents check of wireless remote control	1 : -- : 1E and 1D	The received code contents of the remote control code can be confirmed. (See to * 6)

*1 **Emergency Code Check**
With the SENSER LANC

(The emergency code has the first emergency and last emergency. The last emergency side is changed when emergency is generated; the first emergency side records the only code generated first.)

			First	Last	
PAGE	D	ADDRESS	20, 21	24, 25	← Emergency code
PAGE	D	ADDRESS	22	26	← Mode when emergency is generated

Displayed → Be sure to rewrite the address from 20 to 26 to data 00 after the operation.

(1) Emergency code list

Code		Emergency contents
20H,24H	21H,25H	
00	00	Normal mode
01	00	Loading Motor emergency.
02	00	Unloading, Reel emergency.
04	00	Steady, Reel emergency.
08	00	Capstan emergency.
00	01	Drum steady, FG emergency.
00	02	Drum steady, PG emergency.
00	21	Drum steady, FG emergency.
00	22	Drum steady, PG emergency.
00	41	Loading, Drum FG emergency.
00	42	Loading, Drum PG emergency.
00	81	Unloading, Drum FG emergency.
00	82	Unloading, Drum PG emergency.
——	——	Dram steady Phase emergency.

- In order to delete the contents of [the first and the last emergency], write with SENSER LANC as follows.

Page 1	Address 00	Data 01

After that, write data 00 into each address.
After writing, return to

Page 1	Address 00	Data 00

(2) Mode code

Mode	Code	Mode	Code
STOP	20	EDIT S CUE	5A
FF	30	EDIT S REV	5B
REW	38	EDIT S STIL	5F
PB	60	+×1	62
CUE	64	−×1	63
REV	65	−STILL	79
STILL	70	+FRAME	76
REC	40	−FRAME	77
REC. P	41	+×2	66
SHUTTLE EDIT (+)	5A	−×2	62
SHUTTLE EDIT (−)	5B	LOADING	21
CAM STBY	41	UNLOADING	13
CAM REC	40	EJECTED	10
REC REV+	58	+SLOW	72
REC REV−	59	−SLOW	73

* 2 RECOG SW Check

With the SENSER LANC

Page	Address	Bit 7	Bit 6	Bit 5	Bit 4	Bit 3	Bit 2	Bit 1	Bit 0
1	3D	MP-HG		ME/MP	REC PROOF	V MUTE	A MUTE	JOG	VA PB MODE

Bit 4: "1" = REC inhibit
Bit 5: "1" = ME/ 0 : MP
Bit 7: "1" = MPHG/ 0 : Normal

Page	Address	Bit 7	Bit 6	Bit 5	Bit 4	Bit 3	Bit 2	Bit 1	Bit 0
1	3E	DEW			RP PB MODE	CASSETTE COMPARTMENT LOCK	MODE SW2	MODE SW1	MODE SW0

Bit 2, Bit 1, Bit 0: See to the following list
Bit 3: When locking the Cassette Compartment, "1"

• MODE SW CODE LIST

	Address 3E contents			Real port condition			Remark
Position	M SW2	M SW1	M SW0	M SW2	M SW1	M SW0	
EJECT	0	0	0	L	H	H	Cassette Compartment eject position
IA	0	0	1	H	H	H	Interval A
UNLOAD	0	1	0	L	L	H	Normal EJECT unloaded
IB	0	1	1	H	L	H	Interval B
STOP	1	0	0	H	L	L	STOP mode position
IC	1	0	1	H	H	L	Interval C
FWD	1	1	0	L	H	L	Pinch pressure welded
ID	1	1	1	L	L	L	Interval D
SHAKING HEAD POSITION	0	0	0	L	H	L	Shaking head ptsition

☆ This mode releasing is turn off the SENSER LANC.

*** 3 Switch check** (See to the previous page for reading code.)

With the SENSER LANC:

Page 1	Address E8 to ED	Data Refer to table

Address	Bit 7 K IN 7	Bit 6 K IN 6	Bit 5 K IN 5	Bit 4 K IN 4	Bit 3 K IN 3	Bit 2 K IN 2	Bit 1 K IN 1	Bit 0 K IN 0
E 8 K OUT 0	—	REMOTE ON/OFF	AUTO SUPER IMPOSE	TITLE	—	MACRO AF	SHUTTER	AUTO LOCK
E 9 K OUT 1	—	STEREO	MEMORY	COLOR	DATA SCREEN	ONE PUSH AF	AF ON/OFF	PROGRAM AE
EA K OUT 2	—	SUB	EDIT (+)	EDIT (−)	FRAME	AWB	BACK LIGHT	—
EB K OUT 3	—	STANDBY	PAUSE	RESET	REC	FADER	—	BEEP
EC K OUT 4	—	START/ STOP	PB	ZERO MEMORY	TIME	DATE	AGE	VTR
ED K OUT 5	—	Edit/ OFF	REW	STOP	EJECT	FF	SLOW	CAM

☆ This mode releasing is turn off the SENSER LANC.

● Check the initial set value in shipping after the service, because EE PROM is monuted to VTR in this unit.

D Page Initial set value in shipping (for this unit)

Address	Contents					Set value
0 0	Aging mode					00
0 1	Each flag area (destination/model /HEAD widthl × 2MUTE)					D9
0 2	VTR REC key acceptance authorization					AEP, UK: 02 E: 03
0 3						--
0 4	Switching position (low)					Adjustment value
0 5	Switching position (high)					Adjustment value
0 6	Battery A/D modification value					Adjustment value
0 7	Battery end set area					Adjustment value
1 0	SR data storage area	EDIT OFF	MP	HI8	LP	--
1 1	SR data storage area	EDIT OFF	MP	HI8	SP	--
1 2	SR data storage area	EDIT OFF	MP	NOR	LP	16
1 3	SR data storage area	EDIT OFF	MP	NOR	SP	24
1 4	SR data storage area	EDIT OFF	ME	HI8	LP	--
1 5	SR data storage area	EDIT OFF	ME	HI8	SP	--
1 6	SR data storage area	EDIT OFF	ME	NOR	LP	16
1 7	SR data storage area	EDIT OFF	ME	NOR	SP	24
1 8	Titler vertical position adjustment area JOG mode					04
1 9	Titler vertical position adjustment area NOR mode					06
1 A	Titler horizontal position adjustment area playback mode					33
1 B	Titler horizontal position adjustment area EE mode					33
1 C	When SR data storage area EDIT is ON : Hi8 mode					--
1 D	When SR data storage area EDIT is ON : Normal mode					24
1 E						--
1 F						--
2 0	First generated emergency code (low) (First emergecy)					00
2 1	First generated emergency code (high) (First emergency)					00
2 2	Mode code when emergency is generated first					00
2 3						00
2 4	Last generated emergency code (low) (Last emergency)					00
2 5	Last generated emergency code (high) (Last emergency)					00
2 6	Mode code when emergency is generated last.					00

*** 4 In order to operate the motor singly**

[Operation]

Write the following number with the SENSER LANC into | Page 3 | Address DD. |

Then the check of each motor is performed.

10H → Loading motor
11H → Drum motor
12H → Capstan motor

After the set of the above data, operation is performed by pressing the following keys. (When the operation is performed with RM-95, set the HOLD switch to left and release the SENSER LANC.)

FF key → Rotating in right direction
REW key → Inverting
STOP key → Stop

Note) In this mode, operation is only performed on the normally loaded condition.

Note) The motor rotating speed is the normal rotating number. (Drum 30Hz, Capstan SP mode speed, Loading normal speed).

In order to release this mode, turn off the SENSER LANC and turn off the power.

*** 5 In order to read the A/D selecting value (Sensor check)**

[Operation]

With the SENSER LANC:

Write | Page 3 | Address DD | Data 21 |

The following address (PAGE 3) of the A/D selecting value of each A/D port is displayed.

Address	Selecting value Contents
65	TOP sensor (light ON)
67	TOP sensor (light OFF)
64	END sensor (light ON)
66	END sensor (light OFF)
62	S-REEL FG
63	T-REEL FG
60	Thermistor (for SWP correction)
5F	DEW sensor

The voltage of A/D selecting 1 step: $4.9 \div 256 \fallingdotseq 19$mV

*** 6 In order to check the reception contents of the wireless remote control**

With SENSER LANC, the received remote control code is displayed to | Page 1 | Address 1E. |

The remote control code is only displayed while the code which the LANC code is shifted to right for 1 bit is pressed, and FF is displayed when the code is released.

The received category code of the remote control is displayed to the upper 4 bit of | Page 1 | Address 1D. |

(The description of the remote control code is omitted in this chart.)

10-1-8. To Set the AEP, UK Model to REC Mode

1. Make the set CAMERA section connected.
2. Enter SERVICE mode with the adjustment remote control. (Refer to page 190 for details.)
3. Set the data at address: 00 on page: 1 to 01 * 1.
4. Set the data at address: 02 on page: D to 03 *1.
5. Turn the power of the set off.
6. Turn the power of the set on.
7. Make shorting once for S510 land of VK-14 board.

After voltage measurement and adjustment, restore as follows:

1. Set the data at address: 00 on page: 1 to 01 *1.
2. Set the data at address: 02 on page: D to 02 *1.
3. Turn the power of the set off.

*1 [To change the data]

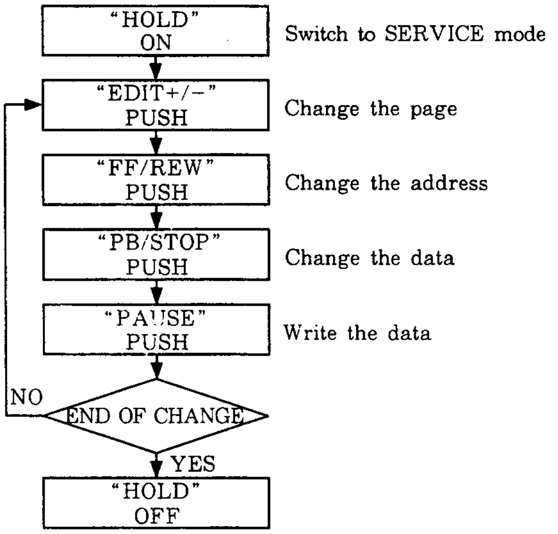

10-2. POWER VOLTAGE CHECK (SS-136 BOARD)

Measuring instrument	Digital voltmeter
SS 4.9V check	
Measurement point	CN506 pin ①
Specified value	$4.90 \pm 0.15V_{DC}$
AUDIO 4.9V check	
Measurement point	CN506 pin ⑦
Specified value	$4.90 \pm 0.15V_{DC}$
EVF 4.9V check	
Measurement point	CN503 pin ①
Specified value	$4.90 \pm 0.15V_{DC}$
LM 5V check	
Measurement point	CN502 pin ⑮
Specified value	$4.85 \pm 0.15V_{DC}$

[Check Method]

1) Each power voltage should satisfy the specified values at normal temperature and humidity.

10-3. SYSTEM CONTROL SYSTEM ADJUSTMENT

10-3-1. Battery Down Adjustment

Mode	CAMERA REC
Signal	Unnecessary
Measurement point	Display on the adjustment remote control
Measuring instrument	Adjustment remote control
Adjustment page	D
Adjustment address	06
Specified value	d: 7d:06 (reference value) Note: Actually, exact data of 5.5V_{DC} of page D address 06 is written.

[Connection]

1) Make the set MIC board, EVF board, and CAMERA section connected.
2) Connect the adjustment remote control to the REMOTE terminal.
3) Connect the digital voltmeter so to measure the voltage of the stabilized power supply unit connected to the battery terminal.

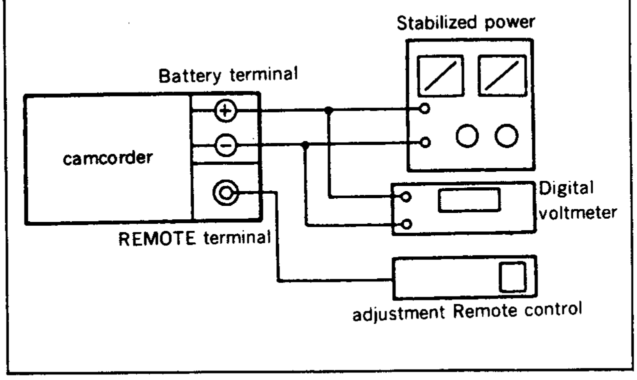

Fig. 10-3.

[Adjustment Method]

1) Turn on the POWER switch. (CAMERA mode)
2) Adjust the output of the stabilized power supply unit to be 6.3 V_{DC} (battery terminal voltage).
3) Turn on the CAMERA REC mode.
4) Set the HOLD switch of the remote control for adjustment to the HOLD side.
5) Adjust the output of the stabilized power supply unit to be 5.58±0.01 V_{DC}. (Battery terminal voltage)
6) Press once the EDIT SEARCH (+) button of the adjustment commander select page 1, select data 01 of address 00, and release the protector.
7) Press four times the EDIT SEARCH (−)button of the remote control for adjusment. (Set the adjustment page to D.)
8) Be sure to set the adjustment address 06 with FF or REW button of the remote control for adjustment, and press the PAUSE button.

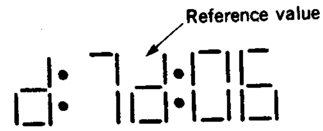

9) Turn off the POWER switch.

[Checking Method]

1) Turn on the power.
2) Adjust the output of the stabilized power supply to be 5.66±0.01V_{DC}.
3) Set the camera REC mode.
4) After five seconds,TALLY should flash at 0.8Hz. (Battery Pre End)
5) Adjust the output of the stabilized power supply to be 5.50±0.01V_{DC}.
6) Set the camera REC mode.
7) After five seconds, STOP mode should be set and TALLY should flash a 3.2Hz. (Battery END)

10-3-2. Clock Accuracy Adjustment (FU-100 Board)

Mode	E-E
Signal	Unnecessary
Measurement point	IC501 pin ⑲
Measuring instrument	Ocsilloscope Frequency counter
Adjustment element	CT501
Specified value	512.000±0.001Hz

[Adjustment Method]

1) Adjust to 512.000±0.001Hz with CT501.

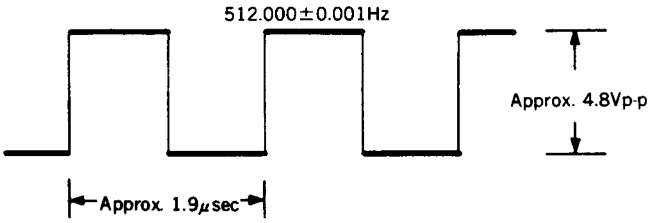

Fig. 10-4.

10-4. SERVO SYSTEM ADJUSTMENT

10-4-1. Switching Position Adjustment (SS-136 Board)

Mode	Playback
Signal	Alignment tape: Operation check (WR5-1CP)
Measurement point	CH1 : CN508 pin ④ (SWP) CH2 : CN508 pin ③ (PB RF)
Measuring instrument	Oscilloscope
Adjustment page	D
Adjustment address	05 04
Specified value	$t_1=0\pm5\mu$sec $t_2=0\pm5\mu$sec

[Connection]

1) Make the set CAMERA section connected.
2) Connect the adjustment remote control to the REMOTE terminal.

[Adjustment Method]

1) Set the HOLD switch of the adjustment remote control to the HOLD side. (ADJUST MODE is set.)
2) Select page 1 with the remote control for adjustment and select adjustment data 01 of adjustment address 00. (Protector is released.)

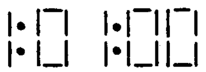

3) Press four times the EDIT SEARCH (—) button of the remote control for adjustment. (Adjustment page D is set.)
4) Select the adjustment address to 05 in order to change the adjustment data, and adjust to $t_1=0\pm5\mu$sec.

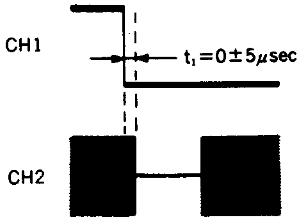

Fig. 10-5.

5) Press the PAUSE button in order to store the adjustment data.
6) Select the adjustment address 04 in order to change the adjustment data and adjust to $t_2=0\pm5\mu$sec.

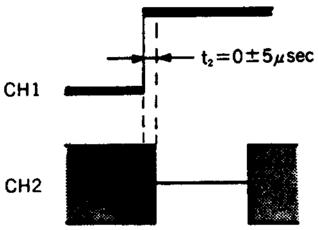

Fig. 10-6.

7) Press the PAUSE button in order to store the adjustment data.

10-4-2. Oscillation Frequency Adjustment (SS-136 Board)

Mode	REC
Signal	Unnecessary
Measurement point	Q903 collector
Measuring instrument	Oscilloscope Frequency counter
Adjustment element	RV901
Specified value	475±5kHz

[Adjustment Method]

1) Adjust to 475±5kHz with RV901.

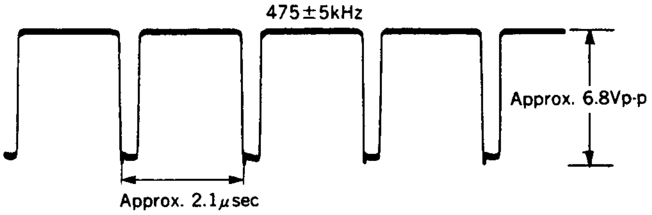

Fig. 10-7.

10-4-3. Output Voltage Adjustment (SS-136 Board)

Mode	REC
Signal	Unnecessary
Measurement point	CN507 pin ⑲
Measuring instrument	Digital voltmeter
Adjustment element	RV902
Specified value	$4.90\pm0.05V_{DC}$

[Adjustment Method]

1) Adjust to $4.90\pm0.05V_{DC}$ with RV902.

10-5. VIDEO ADJUSTMENT

The adjustment of the video system should in principle follow the adjustment procedure below. The color video input signal supplied from the pattern generator is used as the video input signal for video adjustment in the REC mode. Make sure that the SYNC signal and color burst signal are matched with the standard specified for set-up as shown in the Fig. 10-2 during adjustment.

[Adjustment Sequence]

1) Playback Frequency Characteristic Adjustment
2) X'tal Oscillator fo Check
3) REC E-E Level Adjustment
4) IR Adjustment
5) Chroma Comb Filter Adjustment
6) Emphasis Y Level Adjustment
7) Y FM Carrier Frequency Adjustment
8) Y FM Deviation Adjustment
9) REC Y FM Level Adjustment
10) Chroma Emphasis Adjustment
11) HUE Phase Deviation Adjustment
12) REC Chroma Level Adjustment
13) PB CCD Level Adjustment
14) PB Level Adjustment
15) 4FSC Frequency Adjustment
16) Controller Frequency Adjustment
17) Tracking TH Adjustment
18) Character Generator SG Frequency Adjustment
19) DDS Character Position Adjustment

10-5-1. Playback Frequency Characteristic Adjustment (SS-136 Board)

(1)

Mode	Playback
Signal	Alignment tape : Frequency characteristic adjustment (WR5-6C)
Measurement point	CH1 : CN508 pin ④ (D SWP) CH2 : CN508 pin ③ (PB RF)
Measuring instrument	Oscilloscope
Adjustment element	PB 1-CH : RP-77 board RV102 PB 2-CH : RP-77 board RV101
Specified value	3.58MHz level : 5.5MHz level = 4 : 3±0.3

[Adjustment Method]

1) Adjust PB RF OUT of PB 1-CH and PB 2-CH with respective RV so as to get the specified value.

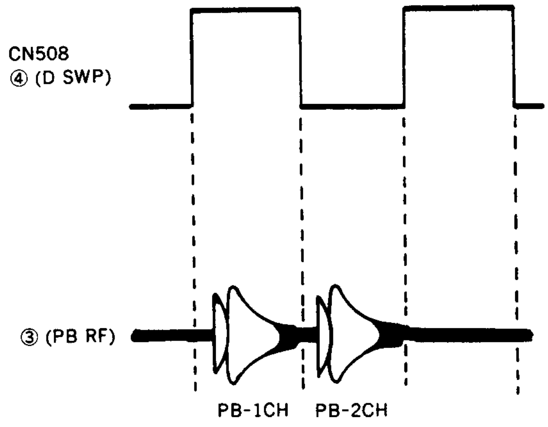

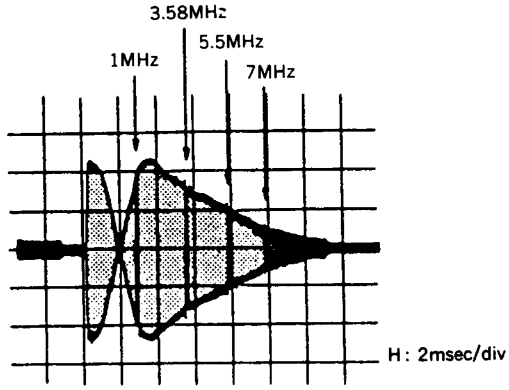

Fig. 10-8.

10-5-2. X'tal Oscillator fo Check (VA-67 Board)

Made	E-E
Signal	Color bar
Measurement point	IC203 pin ⑫
Measuring instrument	Oscilloscope Frequency counter
Specified value	4433619±70Hz

[Check Method]

1) Make sure that the oscillation frequency of IC203 pin ⑫ is 4433619±70Hz.

Fig. 10-9.

10-5-3. REC E-E Level Adjustment (VA-67 Board)

Mode	REC or E-E
Signal	Color bar
Measurement point	J201 (VIDEO OUT terminal)
Measuring instrument	Oscilloscope
Adjustment element	RV205
Specified value	1.000±0.025Vp-p

[Adjustment Method]

1) Adjust to 1.000±0.025Vp-p with RV205.

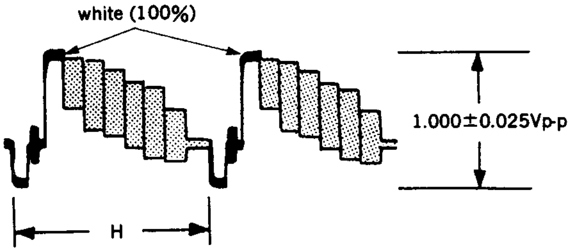

Fig. 10-10.

10-5-4. IR Adjustment (VA-67 Board)

Mode	REC
Signal	Color bar
Measurement point	IC201 pin ⑦
Measuring instrument	Oscilloscope
Adjustment element	RV201
Specified value	Minimum red residual chroma component (50mVp-p or less)

[Connection]

1) Short TP003 and TP007.

[Adjustment Method]

1) Minimize the red residual chroma component with RV201.(50mVp-p or less)
2) After the adjustment, open TP003 and TP007.

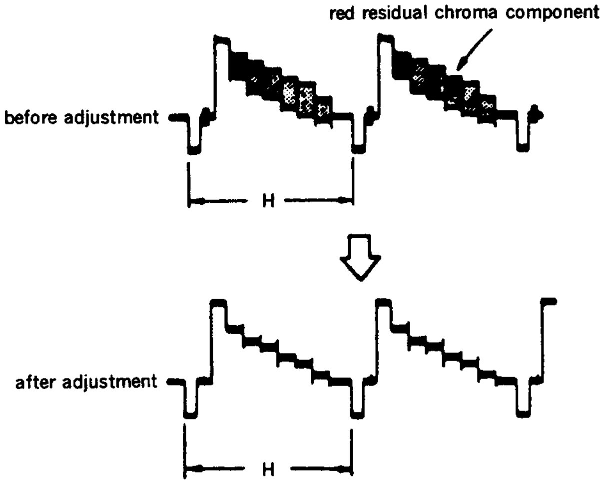

Fig. 10-11.

10-5-5. Chroma Comb Filter Adjustment (VA-67 Board)

Mode	REC
Signal	Color bar
Measurement point	IC201 pin ⑪
Measuring instrument	Oscilloscope
Adjustment element	RV204 RV211
Specified value	Minimum red residual chroma component (40mVp-p or less)

[Adjustment Method]

1) Adjust RV204 and RV211 alternately and minimize the red residual chroma component. (40mVp-p or less)

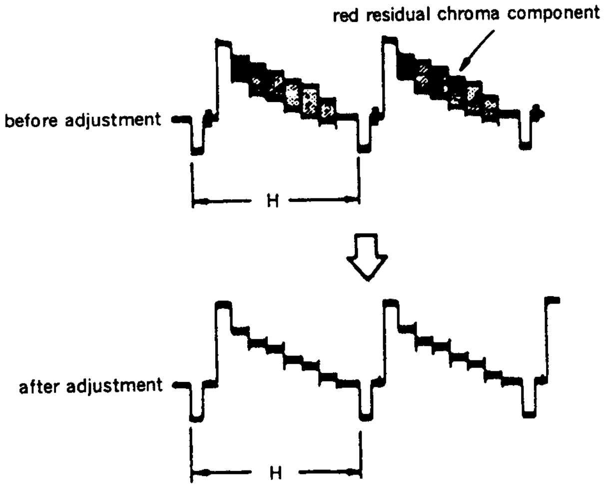

Fig. 10-12.

10-5-6. Emphasis Y Level Adjustment (VA-67 Board)

Mode	REC
Signal	Color bar
Measurement point	IC201 pin ③
Measuring instrument	Oscilloscope
Adjustment element	RV202
Specified value	500±25mVp-p

[Adjustment Method]

1) Adjust to 500±25mVp-p with RV202.

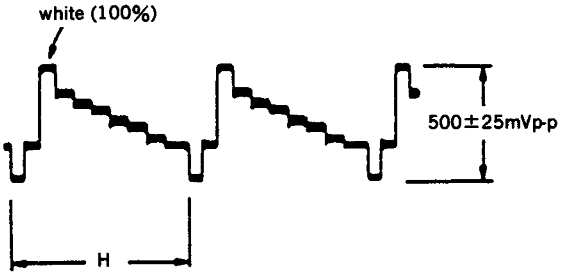

Fig. 10-13.

10-5-7. Y FM Carrier Frequency Adjustment (VA-67 Board)

Mode	REC
Signal	Non-signal
Measurement point	R158 side terminal of RV101 (REC Y)
Measuring instrument	Frequency counter
Adjustment element	RV207
Specified value	4.38±0.04MHz

[Adjustment Method]

1) Adjust to 4.38±0.04MHz with RV207.
2) Make this adjustment after completing 10-5-8. Y FM Deviation Adjustment.

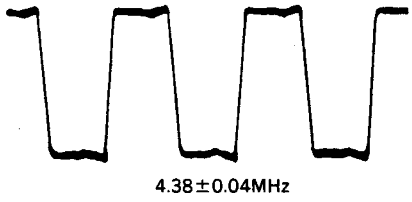

Fig. 10-14.

10-5-8. Y FM Deviation Adjustment (VA-67 Board)

Mode	REC and Playback
Signal	Color bar
Measurement point	J201 (VIDEO OUT terminal)
Measuring instrument	Oscilloscope
Adjustment element	RV206
Specified value	Playback level of 1.00±0.05Vp-p

Note 1: 10-5-7. Y FM Carrier Frequerncy adjustment must been completed.

Note 2: VIDEO OUT terminal (J201) must be terminated at 75Ω.

[Adjustment Method]

1) Record the color bar signal.
2) Playback the recorded signal.
3) Check the playback output level.
   Specified value : 1.00±0.05Vp-p
4) When the specified value is not, turn RV206 as follows and repeat the steps 1) through 3) above.

	RV206 Rotating Direction
When larger than specified value	Clockwise direction (↷)
When smaller than specified value	Counterclockwise direction (↶)

Table. 10-1.

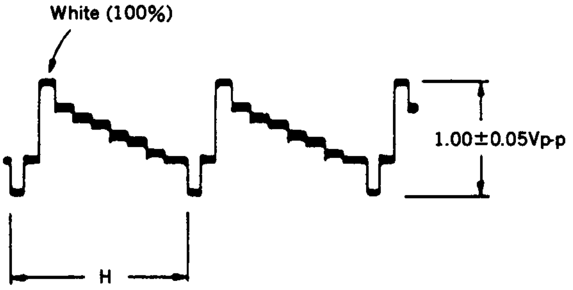

Fig. 10-15.

10-5-9. REC Y FM Level Adjustment (VA-67 Board)

Mode	REC
Signal	Non-signal
Measurement point	CN507 pin ⑤
Measuring instrument	Oscilloscope (20MHz bandwidth ON)
Adjustment element	RV101
Specified value	205±10mVp-p

[Adjustment Method]

1) Adjust to 205±10mVp-p with RV101.

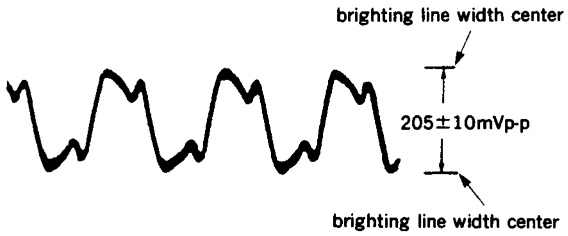

Fig. 10-16.

10-5-10. Chroma Emphasis Adjustment (VA-67 Board)

Mode	REC
Signal	Color bar
Measurement point	IC203 pin ㉔
Measuring instrument	Oscilloscope
Adjustment element	FL302
Specified value	Minimum red level

[Connection]

1) Short between IC203 pin ㉔ and GND at 3.3kΩ resistance.

[Adjustment Method]

1) Minimize the red level with FL302.
2) After the Adjustment, open between IC203 pin ㉔ and GND.

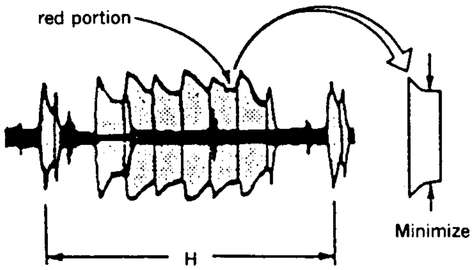

Fig. 10-17.

10-5-11. HUE Phase Deviation Adjustment (VA-67 Board) (Use a Vectorscope)

Mode	Playback+Pause
Signal	Alignment tape for operation check (WR5-5CSP), Color bar portion
Measurement point	J201 (VIDEO OUT)
Measurement equipment	Vectorscope
Adjustment element	RV353 (FSC) RV351 (APC LPF)
Specified value	See Fig. 10-18.

[Connection]

1) Input 4.43MHz signal from Pin ⑫ of IC203 to 1CH of an oscilloscope.
2) Connect 1CH output of an oscilloscope to the EXT. subcarrier reference input of a vectorscope.
3) Put on the EXT. subcarrier switch of a vectorscope.

[Adjustment Method]

1) Adjust with RV353 so as to equalize A and B as shown in Fig. 10-18.
2) Adjust with RV351 so as to minimize the shaking of each three brighting point of C and D.

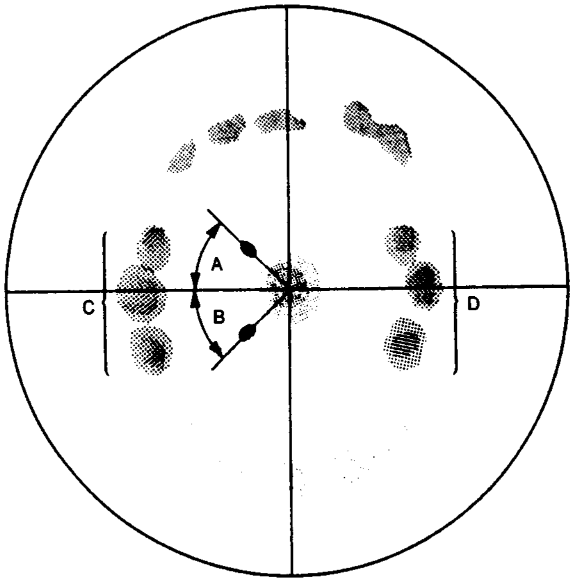

RV353: A=B
RV351: make C and D a contrast

Fig. 10-18.

10-5-12. REC Chroma Level Adjustment (VA-67 Board)

Mode	REC
Signal	Color bar
Measurement point	CN507 pin ①
Measuring instrument	Oscilloscope
Adjustment element	RV301
Specified value	Red portion level=95±10mVp-p

[Adjustment Method]

1) Adjust the red portion to 95±10mVp-p with RV301.

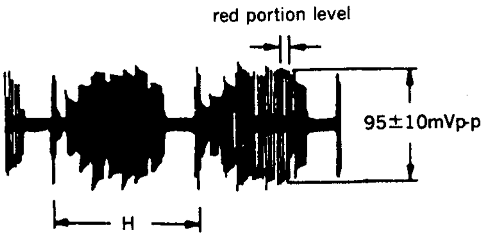

Fig. 10-19.

10-5-13. PB CCD Input Level Adjustment (VA-67 Board)

Mode	Playback
Signal	Alignment tape: Operation check (WR5-5CSP) color bar portion
Measurement point	IC201 pin ㉑
Measuring instrument	Oscilloscope
Adjustment element	RV210
Specified value	500±25mVp-p

[Adjustment Method]

1) Adjust to 500±25mVp-p with RV210.

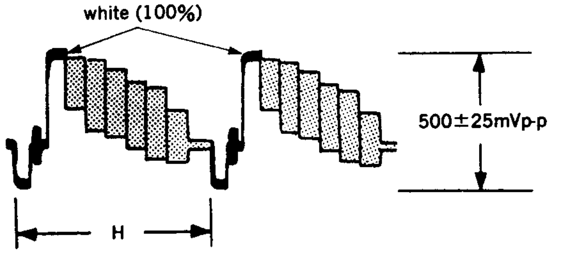

Fig. 10-20.

10-5-14. PB Level Adjustment (VA-67 Board)

Mode	Playback
Signal	Alignment tape : Operation check (WR5-5CSP) color bar portion
Measurement point	J201 (VIDEO OUT terminal)
Measuring instrument	Oscilloscope
Adjustment element	RV203
Specified value	1.00±0.05Vp-p

[Adjustment Method]

1) Adjust to 1.00±0.05Vp-p with RV203.

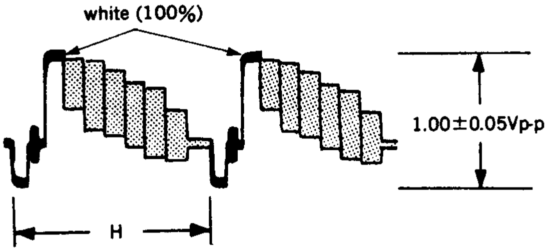

Fig. 10-21.

10-5-15. 4FSC Frequency Adjustment (CT-38 Board)

Mode	E-E
Signal	Non-signal
Measurement point	Q707 Emitter
Measuring instrument	Oscilloscope Frequency counter
Adjustment element	CT702
Specified value	4433619±50Hz
Adjustment procedure	IC704 pin ⑲ : $5V_{DC}$ IC704 pin ㉝ : $3.5V_{DC}$

[Adjustment Method]

1) Adjust to 4433619±50Hz with CT702.

10-5-16. Controller Frequency Adjustment (CT-38 Board)

Mode	CAM E-E (All title white display)
Signal	Not required
Measurement point	VA-67 board J201 (VIDEO OUT)
Measuring instrument	Oscilloscope
Adjustment element	CT701
Specified value	2.0±0.3μ sec

Note : Perform the adjustment with the camera installed.

[Adjustment Method]

1) Display the all title (white) by fetching with the camera E-E.
2) Measure the VIDEO OUT terminal with the oscilloscope, adjust so that the width between the right end of the title and the H-SYNC is 2.0±0.3μ sec.

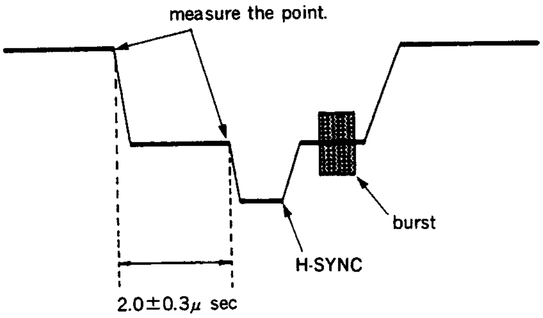

Fig. 10-22.

10-5-17. Tracking TH Adjustment (CT-38 Board)

Mode	E-E
Signal	Staircase (8 stairs)
Measurement point	CH 1 : W704 pin ⑦ (Staircase input) CH 2 : IC703 pin ① (A/D select output)
Measuring instrument	Oscilloscope
Adjustment element	RV703
Specified value	Staircases to the second stair should be fetched and the third one should not be fetched.

[Adjustment Method]

1) Adjust to satisfy the specified value with RV703. (Refer to Fig. 10-23.

Note : In the case that ten staircases are used. the third stair should be fetched and the fourth one should not be fetched.

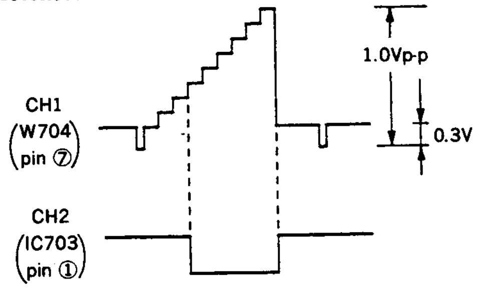

Fig. 10-23.

10-5-18. Character Generator SG Frequency Adjustment (CT-38 Board)

Mode	E-E
Signal	Non-signal
Measurement point	IC902 pin ⑲
Measuring instrument	Oscilloscope Frequency counter
Adjustment element	CT902
Specified value	15625±100Hz

[Adjustment Method]

1) Adjust to 15625±100Hz with CT902.

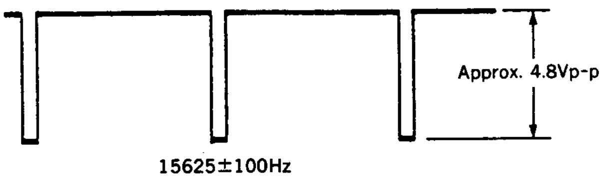

Fig. 10-24.

10-5-19. DDS Character Position Adjustment (CT-38 Board)

Mode	E-E
Signal	Color bar
Measurement point	EVF
Measuring instrument	EVF
Adjustmen element	CT901
Specified value	Refer to Fig. 10-25.

[Adjustment Method]

1) Turn on the DATA SCREEN switch (VK-14 board S508). (Check that it is displayed on the EVF.)
2) Adjust the last inner line to the dividing line between blue and black with CT901. (Refer to Fig. 10-25)
3) Turn off the DATA SCREEN switch (VK-14 board S508). (Check that it went out on the EVF.)

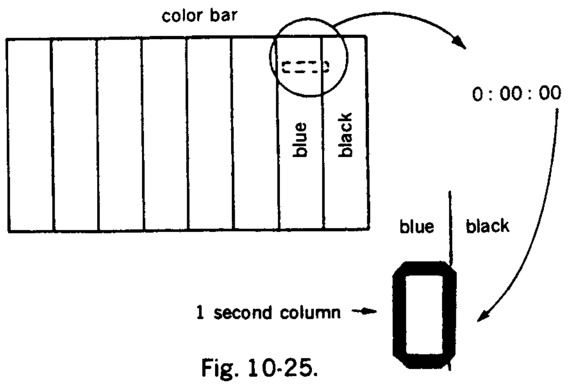

Fig. 10-25.

10-6. AUDIO SYSTEM ADJUSTMENT

- Perform adjustment with the color bar signal used as the video input signal.

[Connection of audio measuring instrument]

In addition to the video system measuring instruments, connect the audio system measuring instruments as shown in the figure below, and set the power switch to the video position for adjustment.

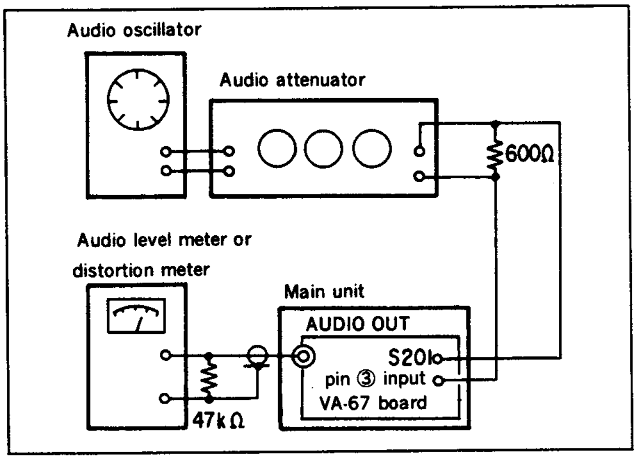

Fig. 10-26.

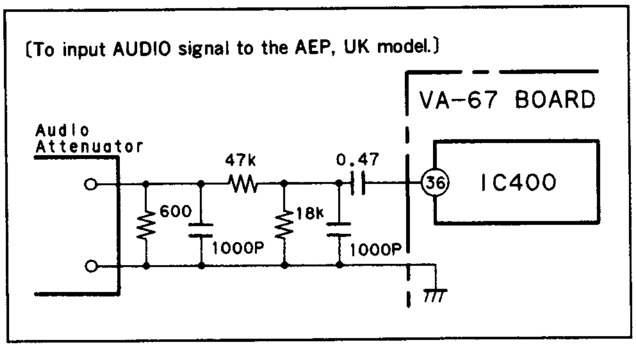

Fig. 10-27.

10-6-1. AFM Carrier Frequency Check (VA-67 Board)

Mode	REC
Signal	Non-signal
Measurement point	IC400 pin ⑧
Measuring instrument	Frequency counter
Specified value	1.500±0.002MHz

Note: Connect the frequency counter through a buffer amplifier (oscilloscope, etc.) having high impedance and low capacitance.

[Checking Method]

1) Turn OFF the audio oscillator output.
2) Confirm that the AFM carrier frequency is 1.500 ±0.002MHz.

10-6-2. REC AFM Carrier Level Check (VA-67 Board)

Mode	REC
Signal	Non-signal
Measurement point	CN507 pin ②
Measuring instrument	Oscilloscope
Specified value	700±5mVp-p

[Checking Method]

1) Confirm that the level is 700±5mVp-p.

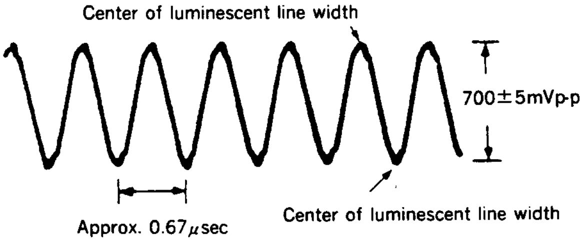

Fig. 10-28.

10-6-3. IR Adjustment (VA-67 Board)

Mode	Playback
Signal	Alignment tape : Operation checking (WR5-5CSP)
Measurement point	IC400 pin ④
Measuring instrument	Oscilloscope
Adjustment element	RV400
Specified value	Refer to Fig. 10-29.

[Preparation]

1) Short between IC400 pin ④ and GND at 4.7kΩ resistance.

[Adjustment Method]

1) As shown in Fig. 10-29, adjust RV400.
2) After the adjustment, open between IC400 pin ④ and GND.

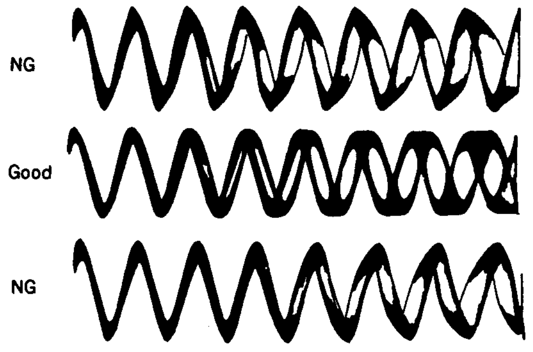

Fig. 10-29.

10-6-4. Deviation Adjustment

Mode	Playback
Signal	Alignment tape: Operation checking (WR5-5CSP)
Measurement point	Audio output terminal
Measuring instrument	Audio level meter
Adjustment element	RV401
Specified value	−7.5±1.0dBs

[Adjustment Method]

1) Adjust to −7.5±1.0dBs with RV401.

10-6-5. E-E Output Level Check

Mode	E-E
Signal	400Hz, −7.5dBs
Measurement point	Audio output terminal
Measuring instrument	Audio level meter
Specified value	−7.5±2dBs

[Checking Method]

1) Make sure that the audio output level is −7.5±2dBs.

10-6-6. Overall Level Check

Mode	Self-recording and playback
Signal	400Hz, −7.5dBs.
Measuremrnt point	Audio output terminal
Measuring instrument	Audio level meter
Specified value	−7.5±2dBs.

[Checking Method]

1) Record the signal.
2) Playback the recorded section
3) Make sure that the audio output level is −7.5±2dBs.

10-6-7. Overall Frequency Characteristics Check

Mode	Self-recording and playback
Signal	Ⓐ 400Hz, −17.5dBs Ⓑ 30Hz, −17.5dBs Ⓒ 10Hz, −17.5dBs
Measurement point	Audio output termial
Measuring instrument	Audio level meter
Specified value	With the 400Hz playback output level as 0dB, the playback output level of 30Hz and 10kHz is 0±3dB

[Checking Method]

1) Record signal Ⓐ through Ⓒ in order.
2) Playback the recorded sections.
3) With the 400Hz playback output level as 0dB, confirm that the playback output level of 30Hz and 10kHz is 0±3dB.

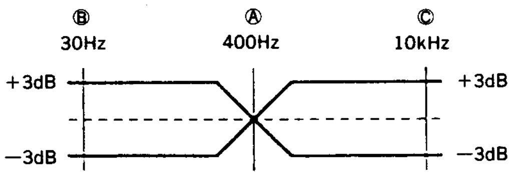

Fig. 10-30.

10-6-8. Overall Distortion Check

Mode	Self recording and playback
Signal	400Hz, −7.5dBs
Measurement point	Audio output terminal
Measuring instrument	Distorsion meter
Specified value	Less than 0.8%*1

[Checking Method]

1) Record the signal.
2) Playback the recorded section.
3) Confirm that the distortion is less than 0.8%.*1

* 1 Value when 200Hz to 3kHz BPF is used.

10-6-9. Overall Noise Level Check

Mode	Self-recording and playback
Signal	No signal (Short between input point and GND with a jumper wire.)
Measurement point	Audio output terminal
Measuring instrument	Audio level meter
Specified value	Less than −62.0dBs*2

[Checking Method]

1) Record the signal
2) Playback the recorded section
3) Make sure that the noise level is less than −62.0dBs.*2
   * 2 Value when IHF-A hearing correction filter is used.

10-7. ELECTRONIC VIEWFINDER SYSTEM ADJUSTMENT (A TYPE) (VF-27 BOARD)

10-7-1. Horizontal Tilt Adjustment

Mode	Playback
Signal	Alignment tape for checking operation (WR5-5CSP) Monoscope portion
Specified value	See Fig. 10-31

[Adjustment Method]

1) By turning RV904 (BRIGHT), adjust for a luminance level which provides appropriate visibility of the CRT screen.
2) Loosen the DY (deflection yoke) tightening nut.
3) Make the image horizontal by rotating DY.
4) Retighten the DY tightening nut. (Do not tighten excessively.)

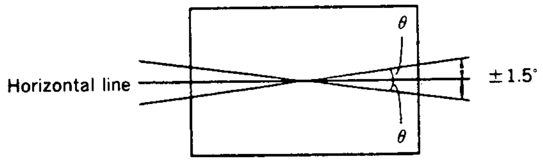

Specified value : Image orientation within ± 1.5° of horizontal line.

Fig. 10-31.

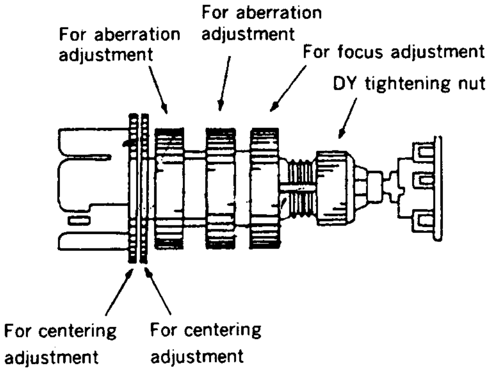

Fig. 10-32.

10-7-2. Centering Adjustment

Mode	Playback
Signal	Alignment tape for checking operation (WR5-5CSP) Monoscope portion
Specified value	See Fig. 10-33.

[Adjustment Method]

1) Turn the centering adjustment rings to provide an image with even night, left, upper and lower margins. (See Fig. 10-32.)

Note : Since the centering position is affected by the earth magnetism, turn the equipment over 360° horizontally, and make adjustments at the orientation which exhibits median displacements of the image.

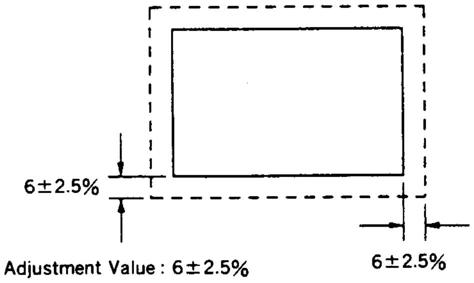

Fig. 10-33.

10-7-3. Focus Adjustment

Mode	Playback
Signal	Alignment tape for checking operation (WR5-5CSP) Monoscope portion

[Adjustment Method]

1) Adjust for optimum focus using the focus ring. (See Fig. 10-32.)

10-7-4. Aberration Adjustment

Mode	E-E
Signal	Dot pattern
Specified value	See Fig. 10-34.

[Adjustment Method]

1) Use the aberration adjustment rings to adjust any trailing dots to within 2 times the dot diameter and any fan shaped aberrations to within the dot diameter.
2) If off center, repeat the Centering Adjustment.

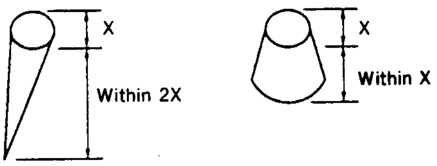

Fig. 10-34.

10-7-5. Horizontal Oscillation Frequency Adjustment

Mode	Playback
Signal	Alignment tape for checking operation (WR5-5CSP)
Measurement point	CN904 pin ⑤
Measuring instrument	Digital voltmeter or oscilloscope (DC range)
Adjustment element	RV901
Specified value	$2.60 \pm 0.05V_{DC}$

[Adjustment Method]

1) Adjust to $2.60 \pm 0.05V_{DC}$ using RV901.

10-7-6. Horizontal Amplitude Adjustment

Mode	Playback
Signal	Alignment tape for cheking operation (WR5-5CSP) Monoscope portion
Adjustment element	C911
Specified value	6.0±3.0%

[Adjustment Method]

1) Line up the upper and lower sections of the monoscope image with the upper and lower edges of the screen by rotating RV902.
2) Rotate RV904 to set the brightness to the normal level.
3) Short or open the pattern (A) of the H size adjustment capacitor (C911) to provide horizontal overscans of 6.0±3.0% (total of left and right). (See Fig. 10-36.)

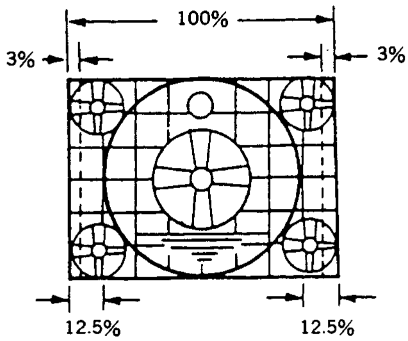

Fig. 10-35.

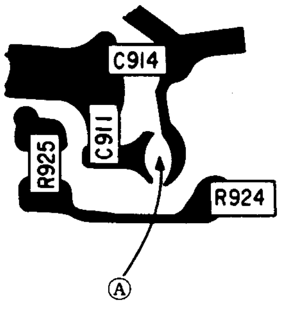

VF-27 Board
(conductor side)

A section	H size
Open	Large
Short	Small

Fig. 10-36.

10-7-7. Vertical Amplitude Adjustment

Mode	Playback
Signal	Alignment tape for checking operation (WR5-5CSP) Monoscope portion
Adjustment element	RV902
Specified value	6.0±3.0%

[Adjustment Method]

1) By turning RV902, adjust vertical overscan to 6.0±3.0% (upper and lower total).

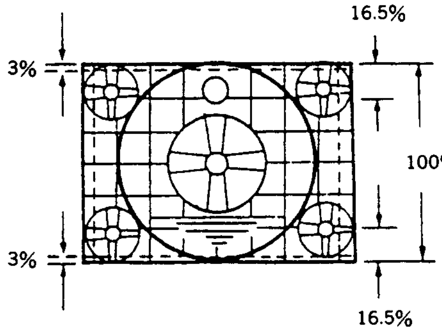

Fig. 10-37.

10-7-8. Brightness, Contrast Adjustments

Mode	Playback
Signal	Alignment tape for checking operation (WR5-5CSP) Monoscope portion
Adjustment element	Brightness : RV904 Contrast : RV903

[Adjustment Method]

1) Perform brightness and contrast adjustments alternately until the bright and dark areas of a gray scale are displayed correctly. (The bright areas should not be made too bright to avoid a fuzzy display of the cross-hatches in the monoscope circle, and the brightness of the dark areas should be such that discrimination between the darkest and second darkest area is possible.)

10-7-9. Horizontal Amplitude, Vertical Amplitude and Focus Checks

Values should conform to specifications given in 10-7-6. Horizontal Amplitude Adjustment and 10-7-7. Vertical Amplitude Adjustment. If not. readjust accordingly, and repeat 10-7-8. Brightness, Contrast Adjustments. In this case, focus needs to be checked. If the image is not clear, perform 10-7-3. Focus Adjustment and 10-7-4. Aberration Adjustment.

10-8. ELECTRONIC VIEWFINDER SYSTEM ADJUSTMENT (B TYPE) (VF-26 BOARD)

10-8-1. Horizontal Tilt Adjustment

Mode	Playback
Signal	Alignment tape for checking operation (WR5-5CSP) Monoscope portion
Specified value	See Fig. 10-39.

[Adjustment Method]

1) Adjust the volume array Ⓓ (BRIGHT) for appropriate brightness on CRT screen. (See Fig. 10-40.)
2) Loosen the DY (deflection yoke) tightening nut. (See Fig. 10-38.)
3) Make a picture horizontal by turning the DY.
4) Retighten the nut. (Do not tighten excessively.)

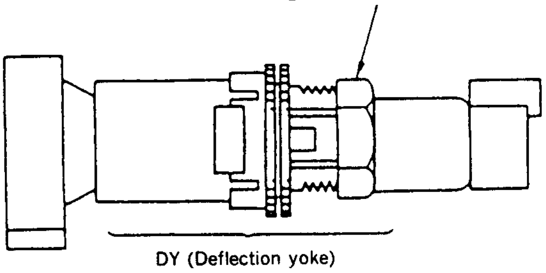

Fig. 10-38.

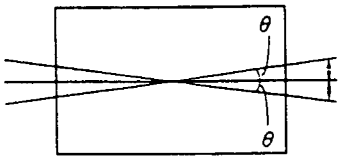

Specified value: Image orientation within±1.5° of horizontal line.

Fig. 10-39.

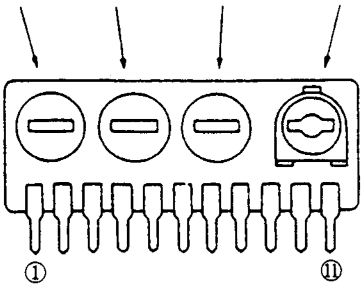

Volume array (CP901)

Fig. 10-40.

10-8-2. Centering Adjustment

Mode	Playback
Signal	Alignment tape for checking operation (WR5-5CSP) Monoscope portion
Specified value	See Fig. 10-42.

[Adjustment Method]

1) Turn the centering adjustment rings to provide an image with even right, left, upper and lower margins. (See Fig. 10-41.)

Note : Since the cenering position is affected by the earth magnetism, turn the equipment over 360° horizontally, and make adjustments at the orientation which exhibits median displacements of the image.

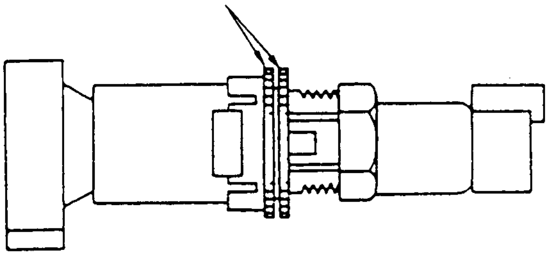

Fig. 10-41.

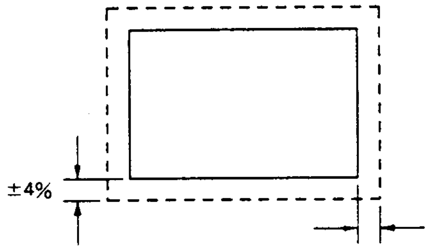

Adjustment value : ±4%

Fig. 10-42.

10-8-3. AFC Adjustment

Mode	E-E or Camera standby
Signal	Color bar
Measurement Point	C915 ⊕ side
Measuring instrument	Digital voltmeter or oscilloscope (DC range)
Adjustment element	Volume array Ⓑ (AFC)
Specified value	$2.6\pm0.1V_{DC}$

[Adjustment Method]

1) Adjust volume array Ⓑ (AFC) for $2.6\pm0.1V_{DC}$. (See Fig. 10-40.)

10-8-4. Horizontal Amplitude Adjustment

Mode	Playback
Signal	Alignment tape for checking operation (WR5-5CSP) Monoscope portion
Adjustment element	C905
Specified value	6.0±3.0%

[Adjustment Method]

1) Line up the upper and lower section of monoscope image with the upper and lower edges of the screen by rotating volume array Ⓐ (V SIZE). (See Fig. 10-40.)
2) Rotate volume array Ⓓ (BRIGHT) to set the brightness to the normal level.
3) Short or open the pattern [A] of the H size adjustment capacitor (C905) to provide horizontal overscans of 6.0± 3.0% (total of left and right). (See Fig. 10-44.)

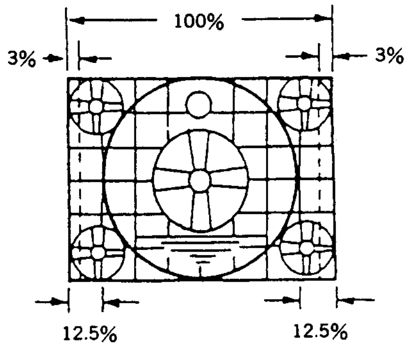

Fig. 10-43.

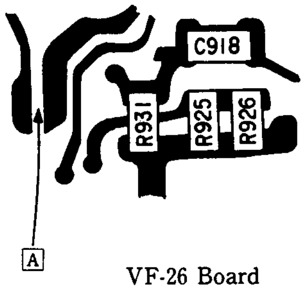

VF-26 Board (conductor side)

A section	H size
Open	Large
Short	Small

Fig. 10-44.

10-8-5. Vertical Amplitude Adjustment

Mode	Playback
Signal	Alignment tape for checking operation (WR5-5CSP) Monoscope portion
Adjustment element	Volume array Ⓐ (V SIZE)
Specified value	6.0±3.0%

[Adjustment Method]

1) By turning volume array Ⓐ (V SIZE), adjust vertical overscan to 6.0±3.0% (upper and lower total). (See Fig. 10-45.)

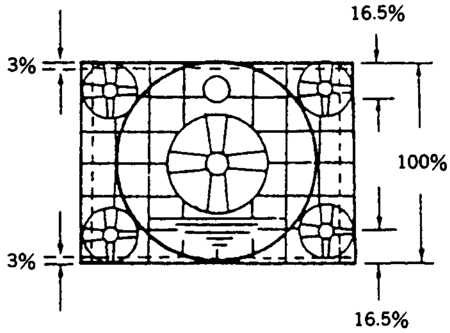

Fig. 10-45.

10-8-6. Focus Adjustment

Mode	Playback
Signal	Alignment tape for checking operation (WR5-5CSP) Monoscope portion
Adjustment element	RV901

[Adjustment Method]

1) Adjust to the best focus point with RV901.

10-8-7. Brightness, Contrast Adjustments

Mode	Playback
Signal	Alignment tape for checking operation (WR5-5CSP) Monoscope portion
Adjustment element	Brightness : Volume array Ⓓ (BRIGHT) Contrast : Volume array Ⓒ (CONT)

[Adjustment Method]

1) Adjust volume array Ⓓ (BRIGHT) and Ⓒ (CONT) alternately until the bright and dark areas of a gray scale are displayed correctly. (The bright areas should not be made too bright to avoid a fuzzy display of the cross-hatches in the monoscope circle, and the brightness of the dark areas should be such that discrimination between the darkest and second darkest areas is possible.) (See Fig. 10-40.)

10-9. ADJUSTING PART LOCATION DIAGRAM

VA-67 BOARD (COMPONENT SIDE)

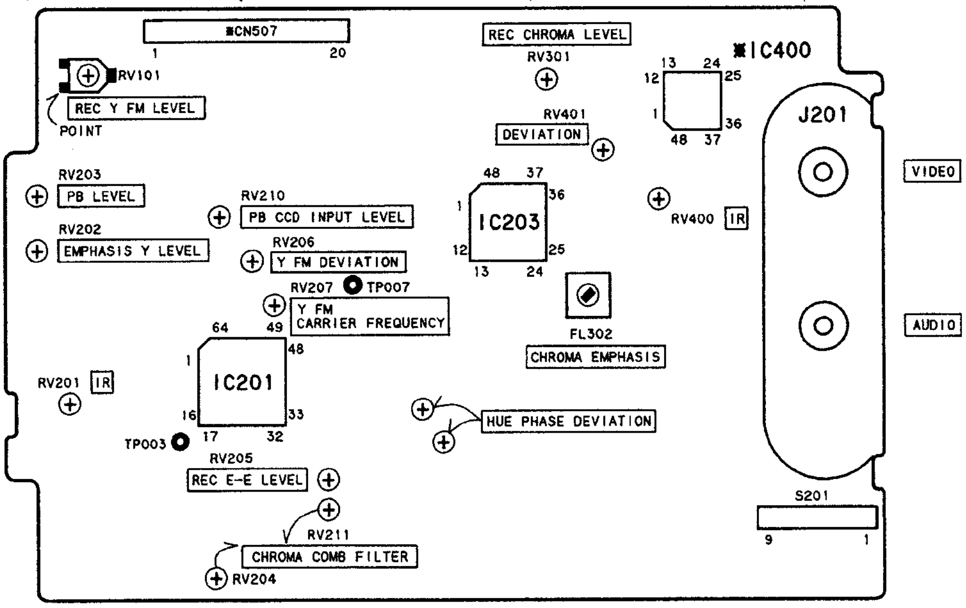

*: Indicates a adjustment element mounted on the conductor side.

VF-26 BOARD (COMPONENT SIDE)

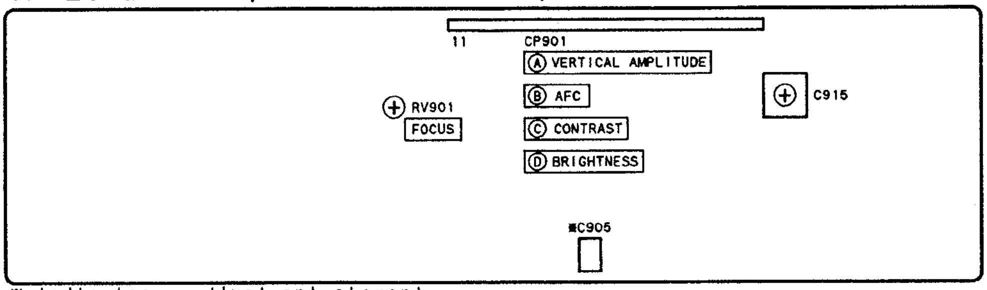

*: Indicates a adjustment element mounted on the conductor side.

VF-27 BOARD (COMPONENT SIDE)

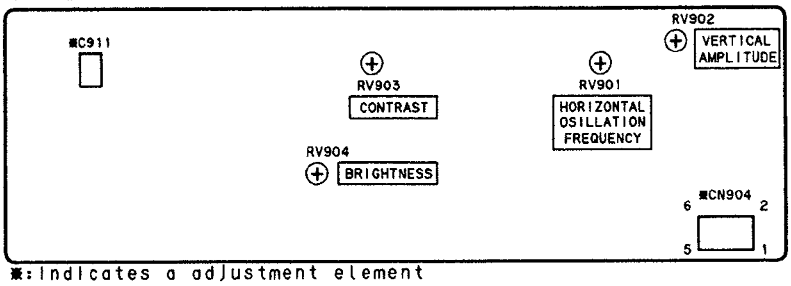

*: Indicates a adjustment element mounted on the conductor side.

SS-136 BOARD (COMPONENT SIDE)

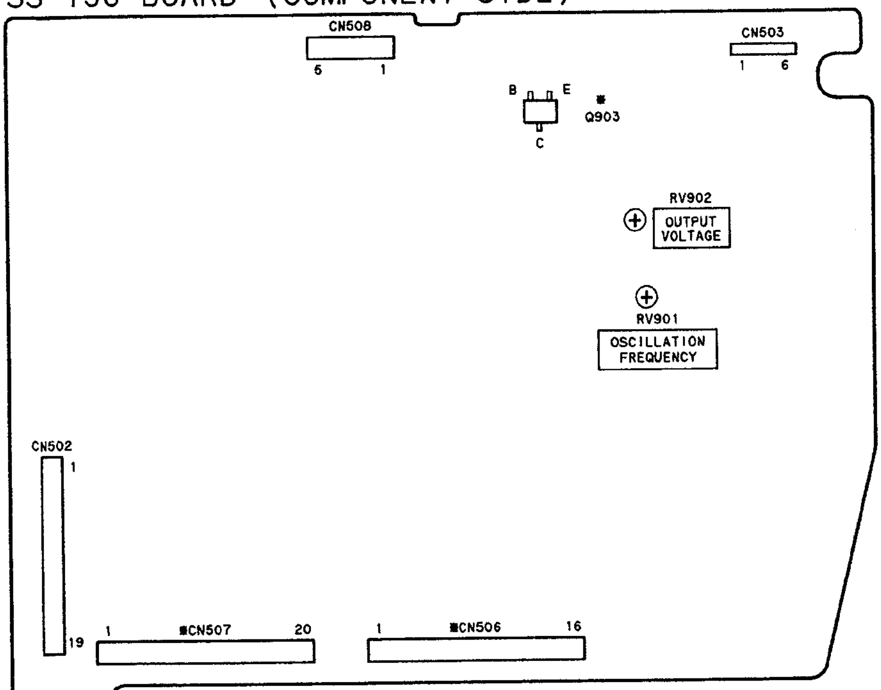

*: Indicates a adjustment element mounted on the conductor side.

FU-100 BOARD (COMPONENT SIDE)

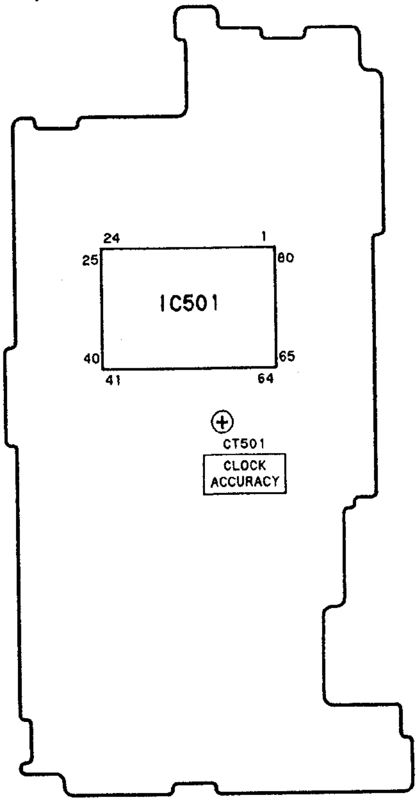

CT-38 BOARD (COMPONENT SIDE)

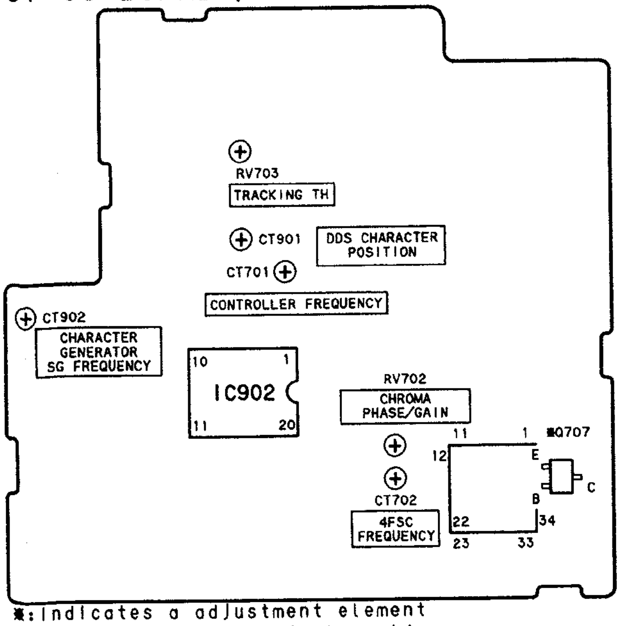

*: Indicates a adjustment element mounted on the conductor side.

9-973-106-11

Sony Corporation

English
91F0467-1
Printed in Japan
© 1991. 6